Intelligent Drivesystems, Worldwide Services

GB

M7000

MOTORS(.3)

IE1 Standard IE2 IE3

NORD DRIVESYSTEMS

Contents

INDRODUCTION . . . . . A 2 - 3

STANDARDS, REGULATIONS,
NOMENCLATURE . . . . . A 4 - 17

MOTOR SELECTION. . . . . A 18 - 28

OPTIONS . . . . . A 29 - 41

MOTOR INQUIRY FORM. . . . . A 42 - 43

CIRCUIT DIAGRAMS . . . . . A 44 - 45

TECHNICAL EXPLANATIONS . . . . . A 46 - 52

BRAKES . . . . . B 1 - 19

MOTOR DATA . . . . . C 1 - 23

DIMENSIONED DRAWING
OF MOTORS . . . . . C 24 - 43

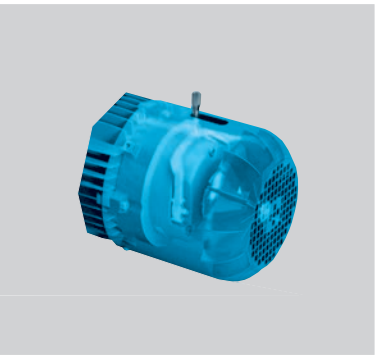

NORD WORLDWIDE

Global presence

- **NORD** has own subsidiaries in 35 countries
- with offices in over 52 countries is **NORD** present
- Service and sales partner

NORD DRIVESYSTEMS with its headquarters in Bargteheide, near Hamburg, and subsidiaries in 35 countries is a global company with an extensive range of products and services for electrical, mechanical and electronic drive technology.

With a staff of approx. 2900 in four German factories as well as international production facilities, NORD produces and distributes drive technology for the global market.

- Technical support
- Support for installation and commissioning
- Spare parts management

The design of user-specific drive solutions with its customers and their supervision from the planning phase right up to commissioning is what makes NORD a strong and dependable partner.

We see 24-hour service, fast availability and customer proximity as both a responsibility and an obligation, just as you can expect from a leading drive manufacturer such as NORD.

PRODUCTION SITES - GERMANY

Parent plant NORD Bargteheide

NORD Electronic DRIVESYSTEMS Aurich

NORD gear factory Glinde

NORD Production Technology in Gadebusch

EXAMPLE - PRODUCTION SITES - ABROAD

Vieux Thann Frankreich

Nowa Sol Polen

Waunakee, Wisconsin USA

Suzhou China

Introduction

Asynchronous low voltage motors

The motors listed in this catalogue are low voltage asynchronous motors, which can be used as gear motors or stand-alone motors.

The catalogue only contains motors which we manufacture ourselves, in the power range from 0.12 to 30 kW. Information about motors with powers > 30kW as well as special motors such as explosion-protected motors, submersible motors or encapsulated motors can be supplied on request.

NORD IE1/Standard-Motors

The motors which were previously marked with the EFF2 logo are still available from NORD. Their use must be checked with regard to national regulations. Special ambient conditions or operating modes result in exempting circumstances, which permit the use of these motors.
Usually, IE1 motors for S1 operation are permitted for export to countries which prescribe IE1 and countries in which there are no corresponding regulations.

.

IEC60034-30	European Union (50Hz) to 15.6.2011	60Hz (USA, ...)
IE1	comparable to EFF2	comparable to South America standards
IE2	comparable to EFF1	equal to NEMA Energy Efficiency / EPACT
IE3		equal to NEMA Premium Efficiency
IE4 in planning		equal to Super Premium Efficiency

Efficiency increase

Efficiency classes IE1, IE2, IE3

The standard **IEC 60034-30:2008** specifies efficiency classes and therefore forms the basis for the various national efficiency requirements. At the same time, the standard **IEC 60034-2-1:2007** harmonises the procedures for the measurement of efficiencies.

As of 16.06. 2011, only motors of efficiency class IE2 or better may be used for S1 operation of three-phase squirrel-cage motors with 0.75 kW and more in the European Union. The basis for this is ErP 2009/125/EU VO640-2009. You must decide in good time (delivery time + project planning time), whether you need to use IE2 motors for your application or whether any of the exemptions apply to your application.
You can find assistance for your decision in this catalogue from ⇨🕮 A5.

The new NORD motor catalogue M700 has been supplemented with information about the new efficiency classes IE1, IE2 and IE3.

.

Differences throughout the world

The new efficiency classes have different designations, specifications and exceptions in various regions of the world. You can find all the details of these from ⇨🕮 A5.

Name plates

The operating mode of standard / IE1 motors is always indicated on the name plate of the gear, not on the name plate of the motor.

Global NORD Motor

We have developed our modular system for global use on the basis of NORD IE2 motors. This ensures great flexibility and short delivery times. Taking global efficiency requirements and the different regional conditions into account, NORD offers you a global solution approach.

Please enquire if this is required.

IE2/IE3 - Technical differences

Efficiency class IE2 and IE3 motors have essential differences compared with the previously common IE1/EFF2 motors. The increased efficiency is achieved by the use of additional material of higher quality as well as new production methods and design solutions. These definitely comply with the legal requirements and often exceed them.

The change from the previous motors to IE2/IE3 motors is also made easy by the fact that both NORD motor series normally have the same external dimensions. The previous motor dimensions are different in only a few cases.

The tables from ⇨🕮 C24 provide an overview.

The changed characteristics of the motors must also be taken into account during planning (e.g. greater starting torques, greater breakdown torques, higher speeds, greater power reserves and greater weight). Exactly how the higher starting and breakdown torques can be used to your advantage in combination with the extended operating range is explained below.

NORD IE2 motors with improved characteristics

NORD IE2 motors have new characteristics. Thermal reserves now enable new design of the drive units, whereby the partial load range can be shifted upwards.

Thanks to symmetrization of the rating point, efficient operation is also possible above the rating point. The lower losses of IE2 motors allow operation above the rated power power, which is also not thermally critical in continuous use ⇨🕮 A22 - Extended operation range.

For our customers this means that this operating range can also be included in the planning for the application. As the start-up and breakdown torque has also been increased, it is recommended that the design is optimised and safety factors reduced or removed entirely, as the motor has permanent reserves. If these reserves are consistently utilised economic benefits result, as in many cases smaller sizes may be used.

For motors with several rated voltages, the regulation requires that the efficiency for the most unfavourable measurement point is stated.
NORD 4-pole IE2 motors have sufficient reserves so that they can still be supplied for a wide voltage range.

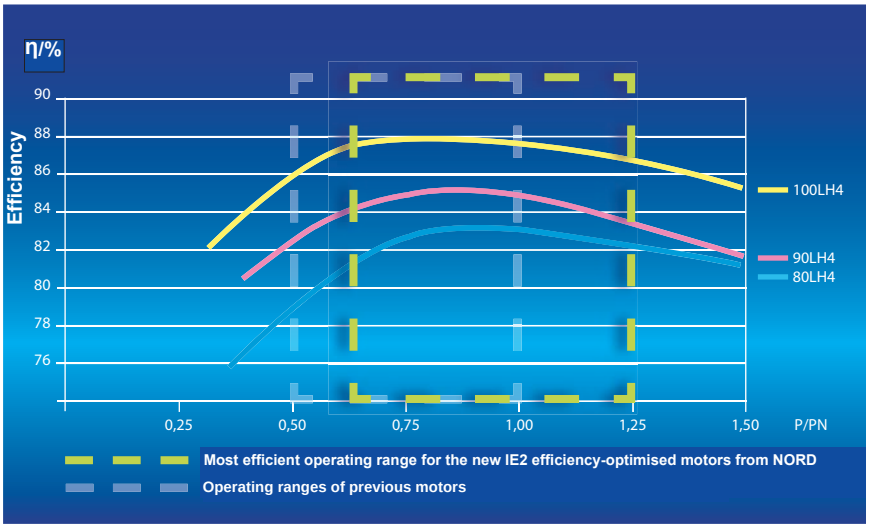

The graphs show the principle efficiency characteristics of asynchronous motors

IE3 - Premium

Motors of efficiency class IE3 achieve an even further improvement of efficiency.
Because of this, the thermal reserves and the fields of use are also increased.
With IE3, NORD also remains true to standard sizes for standard powers. This is possible through the use of selected materials and innovative production methods. Stamping of the wide voltage range has been omitted. Even so, with IE2 motors this mode of operation remains possible. However, in this case we can no longer guarantee IE3 efficiency.
4-pole IE3 motors are suitable for 50 and 60 Hz, so that they can be used anywhere in the world.
Exactly where and when these efficiency classes must be used is explained in this catalogue from ⇨🕮 A5.

You can find the electrical data from ⇨🕮 C2.

IE4 - The next level

Motors of efficiency class IE4 achieve an even further improvement of efficiency.
At present, NORD is developing permanently excited synchronous motors for inverter operation in the power range up to 5.5kW.
Further documentation about IE4 motors is in the course of preparation. Please enquire if this is required.

Please enquire if this is required.

Up to date and careful

This catalogue has been produced with the greatest care on the basis of the current legal situation.
However, we cannot accept liability for technical changes.

Standards, regulations nomenclature

The following tables summarize the essential facts about IE2 and IE3 motors for the global market. Motors listed under the sub-heading “Exceptions” are those for which the use of class IE2 or IE3 motors is not mandatory.

In addition, the regulations for IE2 and IE3 only apply to motors which are operated in S1 mode (continuous operation). The reason for this is that frequent starting of motors with high moments of inertia is not energy-efficient.

All overviews can be found under www.driveefficiency101.com

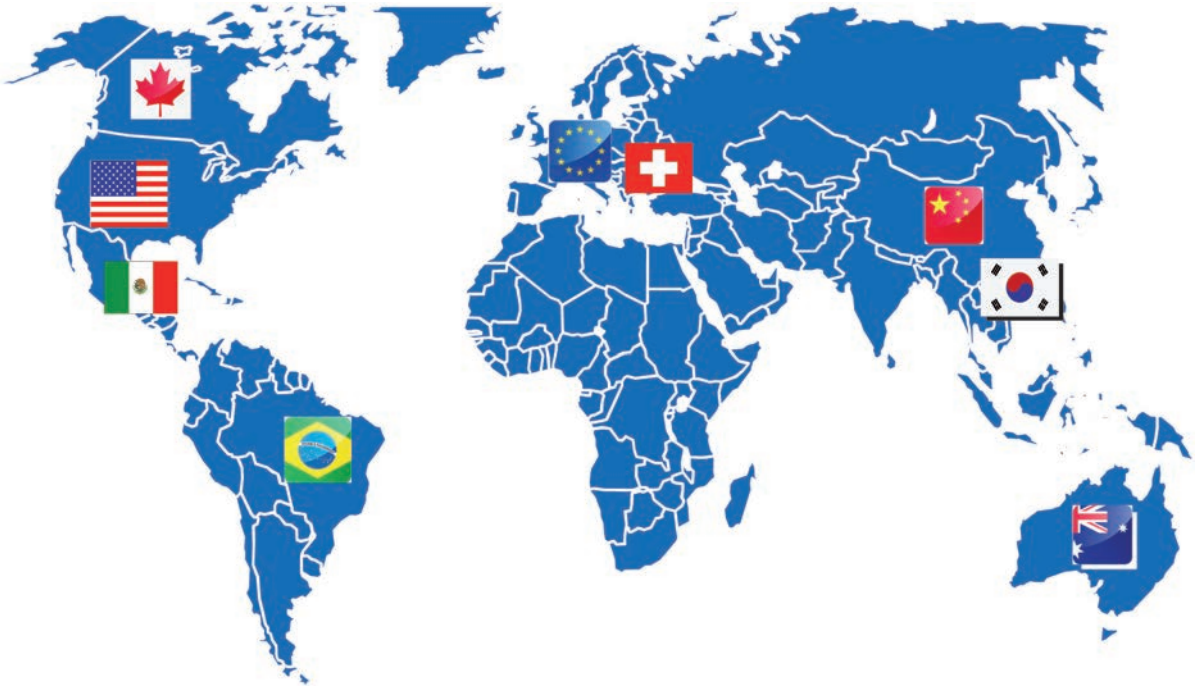

This catalogue has been produced with the greatest care on the basis of the current legal situation. However, we cannot accept liability for technical changes.

European Union

Directive	Preferred Voltages	Circuit	Frequency
ErP 2009/125/EC VO 640-2009	230/400 V 400/690 V	Δ/Y	50 Hz 50/60 Hz

Designation	IE2	IE3
Mandatory as of	16.06.2011	1.1.2015 for P≥7,5 kW 1.1.2017 for P<7,5 kW
Power range	0,75-375 kW	
Number of poles	2,4,6	
Relevant exceptions for IE2, IE3	**1. Intermittent operation / Short term operation** The directive only applies to motors in continuous operation. Operating modes other than S1 as per IEC 60034-1 are exempted from the regulations. e.g.: • **S3-70%** • **S6-80%** • **S9** Explanation of operating modes ⇨📖 A19 Motor data ⇨📖 C2 and above **2. Brake motors** **3.Switchable pole motors** ⇨📖 C7-11 **4. ATEX motors** **Motors for explosion protection (gas and dust) are exempted from the directive** but may be classified according to IE. **5. Ambient temperature** The directive does not apply to motors which are rated for ambient temperatures >40°C or <0°C, i.e.: • **T_{amb} = -20°C...+45°C** **6. Installation altitude** The directive does not apply to motors which are rated for an installation altitude above 1000m above sea level. **7. Single phase motors** ⇨📖 C12-13	
Special features		**E2 +FI** IE2 motors which can be used with inverters may also be used as an alternative to IE3.

Type Plates
(Geared motor)

IE2

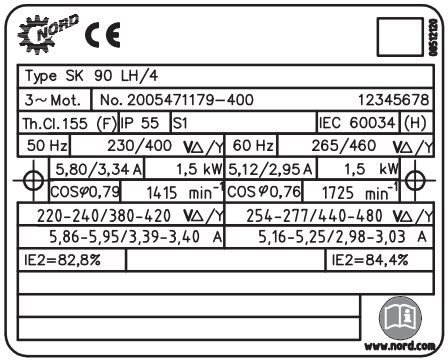

IE3

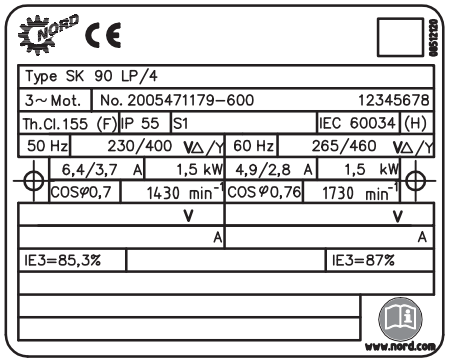

Switzerland

Directive	Preferred voltages	Circuit	Frequency
Energy Ordinance AS2009	230/400 V 400/690 V	Δ/Y	50 Hz 50/60 Hz

Designation	IE2	IE3
Mandatory as of	01.07.2011	open
Power range	0,75-375 kW	
Number of poles	2,4,6	
Relevant exceptions • IE2, IE3	**1. Intermittent operation / Short term operation** The directive only applies to motors in continuous operation S1 or S3>80%. Operating modes other than S1 as per IEC 60034-1 are exempted from the regulations. e.g.: • **S3-70%** • **S6-80%** • **S9** Explanation of operating modes ⇨📖 A19 Motor data ⇨📖 C2 and above **2. Switchable pole motors** ⇨📖 C7-11 **3. Frequency inverter operation** Special motors for frequency inverter operation as per standard IEC 60034-25 of the International Electrical Engineering Commission. **4. ATEX motors** Motors for explosion protection (gas and dust) are exempted from the directive but may be classified according to IE. **5. Ambient temperature** The directive does not apply to motors which are rated for ambient temperatures >40°C or <0°C (up to 600W) or < -15°C, e.g.: • **T_{amb} = -20°C...+45°C** **6. Installation altitude** The directive does not apply to motors which are rated for an installation altitude above 1000m above sea level. **7. Single phase motors** ⇨📖 C12-13	
Special features	Motor data ⇨📖 C14 and above	Motor data ⇨📖 C20 and above

Type Plates
(Geared motor)

IE2

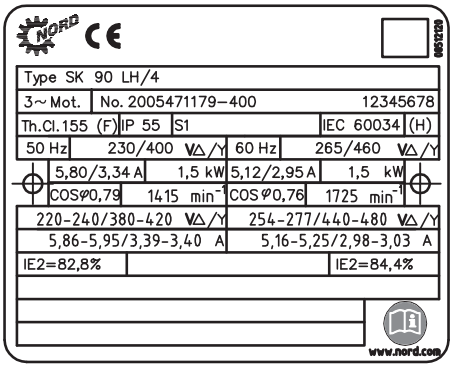

IE3

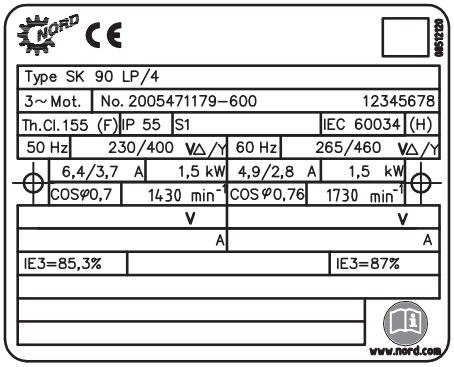

USA

Directive	Preferred voltages	Circuit	Frequency
EISAct 2007	**230/460 V** ⇨📖 A48	**YY/Y**	**60 Hz**

Designation	High / energy efficient	Premium
Mandatory as of	**1997**	**19.12.2010**
Power range	**0,75-375 kW / 1,0-500 hp**	**0,75-150 kW / 1,0-200 hp**
Number of poles	**2,4,6,8**	**2,4,6**
Relevant exceptions • **High/energy efficient, Premium**	**1. Special shafts** NORD gear motors (direct attachment) **2. TEAO, TENV** totally enclosed air-over and unventilated motors **3. Switchable pole motors** ⇨📖 C7-11 **4. Intermittent operation / Short term operation** The directive only applies to motors in continuous operation. Other operating modes are exempted from the directive, e.g.: • **S2** • **S3** • **S6** Explanation of operating modes ⇨📖 A19 **5. Single phase motors** ⇨📖 C12-13	
Relevant exceptions • **Premium** (High efficiency erforderlich)		**1. Flange version motors** **3. Vertical shaft outlet** **3. NEMA Design C Motoren** **4. Motors with voltages less than 600V and other than 230 or 460V including +/-10% tolerance** 0 - 206V & 254 - 413V & 507 - 600V => high efficiency 207 - 253V & 414 - 506V => premium efficiency
Special features	Motor data ⇨📖 C14 and above	Motor data ⇨📖 C20 and above

Type Plates

HIGH / energy efficient

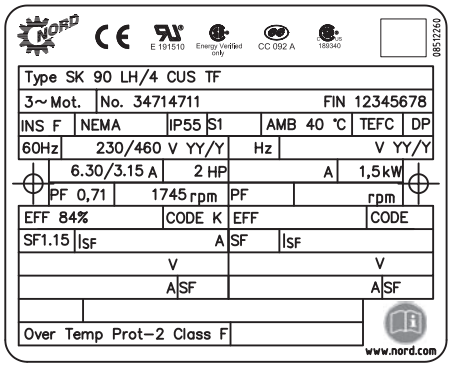

Premium

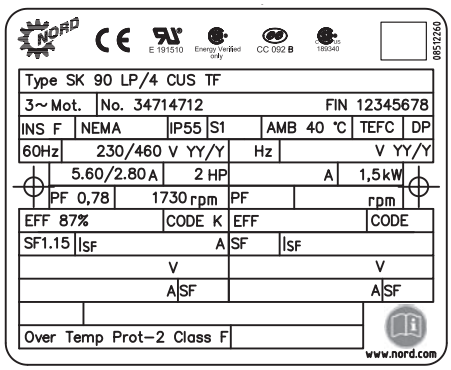

Canada

Directive	Preferred voltages	Circuit	Frequency
Energy Efficiency Regulations 1997 Updated Bulletin on Amending the Standards June 2010	**332/575 V**	**Δ/Y**	**60 Hz** **50/60 Hz**

Designation	HIGH / energy efficient	Premium
Mandatory as of	**1997**	**19.12.2010**
Power range	**0,75-375 kW / 1,0-500 hp**	**0,75-150 kW / 1,0-200 hp**
Number of poles	**2,4,6,8**	**2,4,6**
Relevant exceptions • **High/energy efficient, Premium**	**1. TENV** unventilated motors **2. Switchable pole motors** ⇨📖 C7-11 **3. Intermittent operation / Short term operation** The directive only applies to motors in continuous operation. Other operating modes are exempted from the directive, e.g.: • **S2** • **S3** • **S6** Explanation of operating modes ⇨📖 A19 Motor data ⇨📖 C2 and above **4. Single phase motors** ⇨📖 C12-13	
Relevant exceptions • **Premium** (High efficiency erforderlich)		**1. Gear motors** **2. Flange version motors** **3. Vertical shaft outlet** **4. NEMA Design C or IEC Design H** NORD IE2 or "high efficiency" motors have IEC Design H characteristics.
Special features	Motor data ⇨📖 C14 and above	Motor data ⇨📖 C20 and above

Type Plates

HIGH / energy efficient

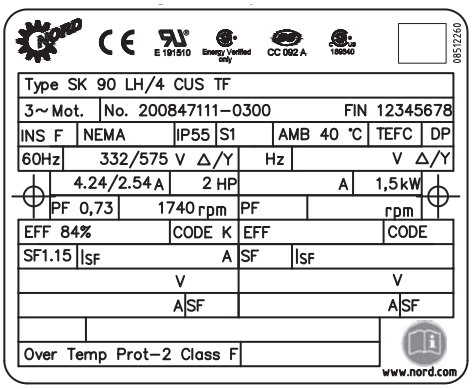

Premium

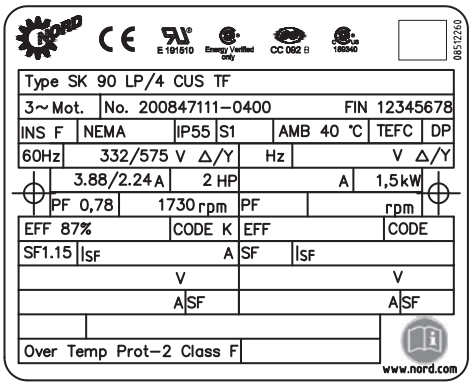

Mexico

Directive	Preferred voltages	Circuit	Frequency
NOM-016-ENER-2010	127/220 V 440 V	Δ/Y	60 Hz

Designation	MEPS
Mandatory as of	19.12.2010
Power range	0,75-373 kW / 1,0-500 hp
Number of poles	2,4,6,8
Relevant exceptions • MEPS	**1. Switchable pole motors** ⇨📖 C7-11 **2. Single phase motors** ⇨📖 C12-13 **3. Intermittent operation / Short term operation** The directive only applies to motors in continuous operation. Other operating modes are exempted from the directive, e.g.: • **S2** • **S3** • **S6** Explanation of operating modes ⇨📖 A19 Motor data ⇨📖 C2 and above
Special features	The efficiencies correspond to IE3 Premium Efficiency. However, the permissible tolerances for the efficiency are considerably larger than in other regions. Because of this, IE3 Premium Efficiency motors can be used which are rated for 460V / 60 Hz.

Type Plates

CUS (Premium)

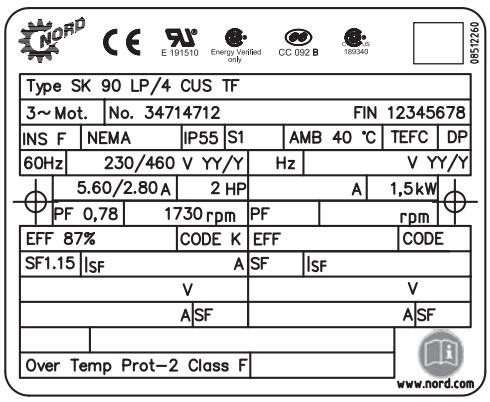

IE3 (Geared motor)

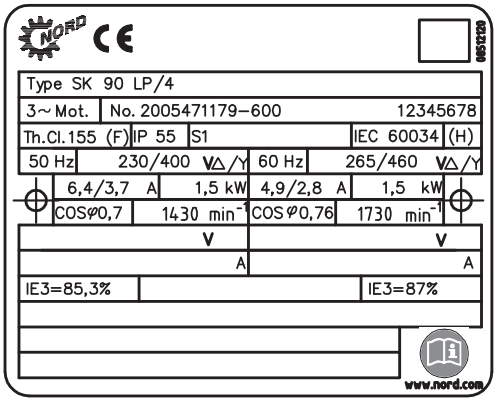

Brazil

Directive	Preferred voltages	Circuit	Frequency
Decreto nº 4.508	220/380 V 440 V	Δ/Y	60 Hz

Designation	ALTO RENDIMENTO
Mandatory as of	08.12.2009
Power range	0,75-185 kW
Number of poles	2,4,6,8
Relevant exceptions • ALTO RENDIMENTO	**1. Intermittent operation / Short term operation** The directive only applies to motors in continuous operation. Operating modes other than S1 and S3 ≥ 80% as per IEC 60034-1 are exempted from the regulations. e.g.: • **S3-70%** • **S6-80%** • **S9** Explanation of operating modes ⇨📖 A19 Motor data ⇨📖 C2 and above **2. Motors for frequency inverter operation** **3.Switchable pole motors** ⇨📖 C7-11 **4. 6-pole motors with powers above 150kW** **5. 8-pole motors with powers above 110kW** **6. Single phase motors** ⇨📖 C12-13
Special features	

Type Plates

ALTO RENDIMENTO

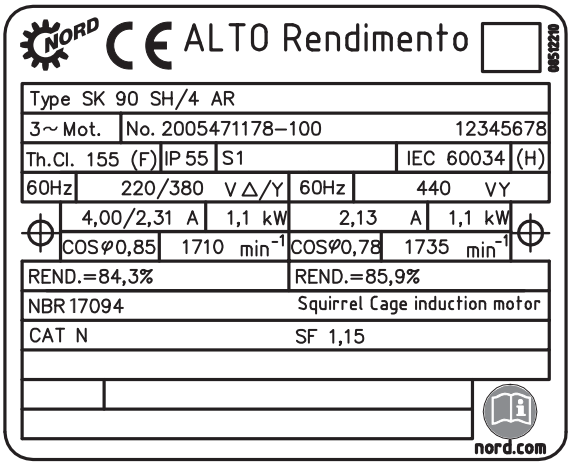

Australia

Directive	Preferred voltages	Circuit	Frequency
MEPS AS/NZS 1359.5	230/400 V	Δ/Y	50 Hz

Designation	MEPS	High efficency
Mandatory as of	01.04.2006	Voluntary
Power range	0,73-185 kW	
Number of poles	2,4,6,8	
Relevant exceptions • MEPS, High efficency	**1. Intermittent operation / Short term operation** The directive only applies to motors in continuous operation. Operating modes other than S1 as per IEC 60034-1 are exempted from the regulations. e.g.: • **S3-70%** • **S6-80%** • **S2-30min** Explanation of operating modes ⇨📖 A19 Motor data ⇨📖 C2 and above **2. Motors for frequency inverter operation** **3. Switchable pole motors** ⇨📖 C7-11 **4. Single phase motors** ⇨📖 C12-13	
Special features		

Type Plates

(Geared motor)

MEPS

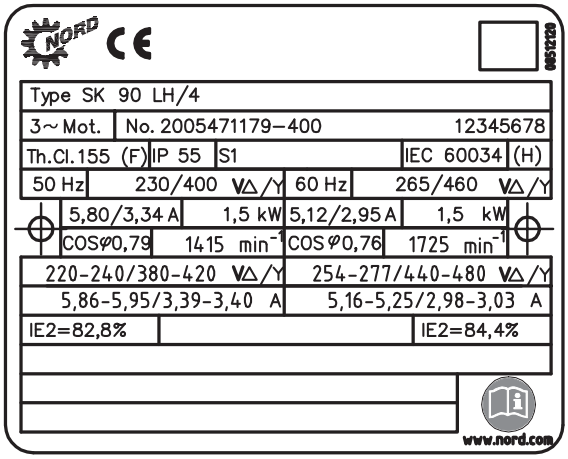

China

Directive	Preferred voltages	Circuit	Frequency
GB 18613-2012	230/400 V max. 690 V	Δ/Y	50 Hz

Designation	Grade 3	Grade 2		Grade 1
Mandatory as of	01.09.2012	01.09.2016	01.09.2017	Voluntary
Power range	0,75-375 kW	7,5-375 kW	0,75-7,5 kW	
Number of poles	2,4,6			
Relevant exceptions • Grade 3, Grade 2	1. **Intermittent operation / Short term operation** The directive only applies to motors in continuous operation. Operating modes other than S1 and S3≥80% as per IEC 60034-1 are exempted from the regulations. e.g.: • **S3-70%** • **S6-80%** • **S9** Explanation of operating modes ⇨📖 A19 Motor data ⇨📖 C2 and above 2. **Switchable pole motors** ⇨📖 C7-11 3. **Single phase motors** - GB 25958-2010 ⇨📖 C12-13 4. **Brake motors**			
Special features	corresponds IE2	corresponds IE3		

Type Plates
(Geared motor)

Grade 3

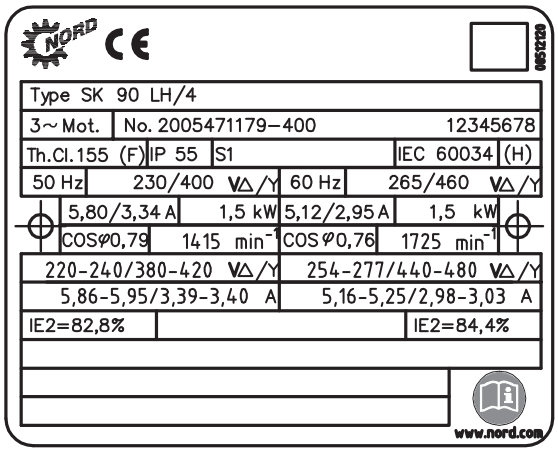

South Korea

Directive	Preferred voltages	Circuit	Frequency
MKE's Notification 2009-317	220/380 V 440 V	Δ/Y	60 Hz

Designation	**MEPS**
Mandatory as of	**01.07.2007 37 - 200 kW** **01.01.2010 15 - 37 kW** **01.07.2010 0,75 - 15 kW**
Power range	
Number of poles	**2,4,6,8 ***
Relevant exceptions • **MEPS**	**1.** The directive only applies to motors in continuous operation. Operating modes other than S1 as per IEC 60034-1 are exempted from the regulations. e.g.: • **S3-70%** • **S6-80%** • **S9** Explanation of operating modes ⇨📖 A19 Motor data ⇨📖 C2 and above **2. Switchable pole motors** ⇨📖 C7-11 **3. TENV unventilated motors** **4. 6-pole motors with powers above 160kW** **5. 8-pole motors with powers above 110kW** **6. Single phase motors** ⇨📖 C12-13 *** The statutory MEPS comes into effect at a later date for 8-pole motors:** from 01.01.2010 37 - 110kW from 01.01.2011 0.75 - 37kW
Special features	

Type Plates
(Geared motor)

MEPS

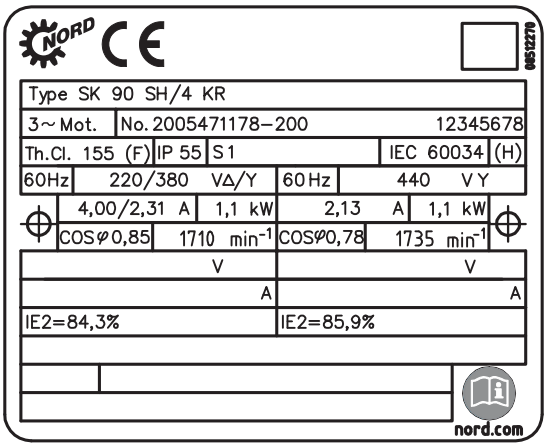

Motor power labelling

Axle height **63, 71, 80, 90, 100, 112, 132, 160, 180, 200**

Power code

S, M, L	Standard power (except efficiency class IEx)
SA, MA, LA, MB, LB	increased power power (except efficiency class IEx)
MX, LX	Standard power with lower axle height (except efficiency class IEx)
S_, M_, L_	Standard power with efficiency class IEx
X_	Standard power with lower axle height with efficiency class IEx
A_	Increased power „L“ with efficiency class IEx

Efficiency class Normal (IE1) **H**=high (IE2) **P**=premium (IE3)

⚠ 2- and 6-pole **on request!**

Number of poles Standard: 2, 4, 6, 8, 4-2, 6-2, 6-4,... with **IE2 + IE3**: only 4-pole

Motor type **Labelling only for motors with special characteristics**

CUS	UL and CSA approved motors
AR	Energy efficient motors for Brazil „Alto Rendimento“ (high efficiency)
KR	Energy efficient motors for Korea
2G	eExplosion protected motors with ignition protection type „**e**” or “**de**” (Zone 1)
3G	Explosion protected motors with ignition protection type „**n**” (Zone 2)
2D	Dust explosion protected motors, Zone 21
3D	Dust explosion protected motors, Zone 22
EAR1	Single phase motors with operational and start-up capacitor
EHB1	Single phase motors with operational capacitor
ECR	Single phase motors with operational and start-up capacitor 60 Hz
EST	Single phase motors with operational capacitor and Steinmetz circuit

Option ⇨📖 A15, A29

Example

100 L H / 4 CUS RD = Axle height **100** Power code **L** Efficiency class **H**(IE2) Number of poles **4** Motor type **CUS** Option **RD**

Examples

	IE1 + Standard	IE2	IE3
1,5 kW	90 L/4	90 LH/4	90 LP/4
2,2 kW	100 L/4	100 LH/4	100 LP/4
3,0 kW	100 LA/4	100 AH/4	100 AP/4
18,5 kW	180 MX/4	180 MH/4	180 MP/4
22 kW	180 LX/4	180 LH/4	180 LP/4
30 kW	200 LX/4	200 XH/4	

Options

Abbreviation	Significance
BRE +	Brake / braking torque + sub-option
DBR +	Double brake + sub-option
Suboption (⇨ 📖 B13-14) RG *	Corrosion protected version
SR *	Dust and corrosion protected version
IR *	Current relay
FHL *	Lockable manual release
HL	Manual brake release
MIK	Micro switch
AS55	Outdoor installation
(*	not with **DBR**)
BRB	Standstill heater / Brake
NRB1/2	Noise-reduced brake
ERD	External earth terminal
TF	Thermistor, PTC resistor
TW	Thermostat, bimetallic switch
SH	Standstill heating
WU	Silumin rotor
Z	Heavy fan, cast-iron fan
WE +	2. shaft end
HR	Handwheel
RD	Protective shield
RDT	Protective shield, textile fan cowl
RDD	Double fan-cowl
AS66	Outdoor installation

Abbreviation	Significance
OL	without fan
OL/H	without fan, without cover
OKA	without terminal box
KB	Condensation drainage hole
MS	Plug-on motor coupling
EKK	One-piece terminal box
KKV	Terminal box, encapsulated
FEU	Moisture protection insulation
TRO	Tropicalised insulation
MOL	Dairy version
VIK	Regulation "Vereinigung Industrieller Kraftwirtschaft" (Association of the Industrial Power Industry)
F	External fan
RLS	Back stop
IG1 (IG11, 12)	Pulsed incremental encoder 1024
IG2 (IG21,22)	Pulsed incremental encoder 2048
IG4 (IG41,42)	Pulsed incremental encoder 4096
IG.K	Encoder with terminal box
MG	Magnet-Incremental encoder
IG	Incremental encoder
AG	Absolute encoder
SL	Sensor bearings
RE	Resolver

Versions

Versions as per DIN EN 60034-7

The following versions have the same dimensions:

IM B3 ⇨ IM B6, IM B7, IM B8, IM V5, IM V6
IM B5 ⇨ IM V1, IM V3
IM B14 ⇨ IM V18, IM V19

The motors can be ordered in the basic version and operated according to the list above (universal version) The installation orientation must be stated for versions with a condensation hole (KB). We recommend the version with a protective cover (RD) for versions IM V5, IM V1, IM V18. For explosion protected motors the protective cover version (RD) is mandatory for versions with the shaft end pointing downwards (⇨📖 C25).

For geared motors, the installation orientation stamped on the gear unit must be complied with.

Designation of dimensions as per DIN EN 50347

⇨📖 C24-43 Fittings:

D, DA	≤ 30	j 6
	> 30	k6
N	≤ 250	j 6
	> 250	h6
H		-0,5

Keyways + keys as per **DIN 6885/1**
Threaded holes DB +DC as per **DIN 332/2**

Assignment of power, shaft ends and flanges; parallelism of shaft / foot surfaces; concentricity of shaft; axial run-out / shaft as per **DIN EN 50347**

Standards, regulations nomenclature

- **NORD** motors
  - are constructed as standard to be compliant with **IEC 60034** Parts 1, 2, 5 ... 9, 11, 12, 14, 30 and bear the **CE** mark.
  - They are enclosed, self-ventilated three or single phase squirrel cage motors.
  - They are also available according to the following standards, recommendations and classifications:

NEMA

- **NORD energy efficient motors**

IE1, IE2, IE3	Efficiency classes according IEC 60034-30
CC 092A	EISAct Efficiency classification (USA) - ee
AR	Efficiency classification Brazil
KR	Efficiency classification Korea

China **C**ompulsory **C**ertification
Nr.: 200 701 040 125 842 9

GOST TR certificate for the import of motors into Russia

CE labelling of products which conform with EU directives

Regulation of the **N**ational **E**lectrical **M**anufacturers **A**ssociation

Motors compliant with the recommendations of the **V**erband der **I**ndustriellen Energie-und **K**raftwirtschaft e.V.

UL listed motors
63 S - 180 LX File No.: 191510

energy verified

CSA approved energy-saving motors (High efficiency)
File No.: 1305200
Master Contract: 189340

CSA and **CUS** approved motors
63 S - 180 LX
File No.: 1293961 (LR112560)
Master Contract: 189340

Information about explosion protected motors (ATEX 94/9/EU) can be found:

- In the special NORD catalogues: **G1001** and **G1022** and
- In Internet: **http://www2.nord.com/cms/de/documentation/dop_documentation.jsp**

Painting

Type	Version	TFD [µm]	TFD total [µm]	EN 12944 Corrosion cat.	Recommended use
F1	1 x 1-K dip-primed, red-brown (cast iron components) and 1 x Two-shot polyurethane primer (2-K-PUR primer)	40 60	60-100		For top-coat to be applied by customer
F2 Standard	1 x 1-K dip-primed, red-brown (cast iron components) and 1 x 2-K polyurethane (2-K-PUR)HS finishing coat	40 50	50-90	C2	For indoor installation
F3.0	1 x 1-K dip-primed, red-brown (cast iron components) and 1 x Two-shot polyurethane primer (2-K-PUR primer) and 1 x 2-K polyurethane (2-K PUR)HS finishing coat	40 60 50	110-150	C2	For indoor and protected outdoor installation with low environmental contamination, e.g. open, unheated halls
F3.1	1 x 1-K dip-primed, red-brown (cast iron components) and 1 x Two-shot polyurethane primer (2-K-PUR primer) and 2 x 2-K polyurethane (2-K PUR)HS finishing coat	40 60 2x50	160-220	C3	For outdoor installation, city and industrial atmosphere with low contamination
F3.2	1 x 1-K dip-primed, red-brown (cast iron components) and 1 x Two-shot EP zinc phosphate epoxy primer and 1 x Two-shot polyurethane primer (2-K-PUR primer) and 2 x 2-K polyurethane (2-K PUR)HS finishing coat	40 50 60 2x50	210-250	C4	For outdoor installation, city and industrial atmosphere with moderate environmental contamination
F3.3	1 x 1-K dip-primed, red-brown (cast iron components) and 2 x Two-shot EP zinc phosphate epoxy primer and 2 x 2-K polyurethane (2-K PUR)HS finishing coat	40 2x50 2x50	200-240	C5	For outdoor installation, city and industrial atmosphere with high environmental contamination
F3.4	1 x 1-K dip-primed, red-brown (cast iron components) and 1 x Two-shot EP zinc phosphate epoxy primer and 1 x ALEXIT chemical resistant finishing coat	40 50 50	100-140		For moderate exposure to chemicals
F3.5	1 x 1-K dip-primed, red-brown (cast iron components) and 1 x Two-shot EP zinc phosphate epoxy primer and 1 x ALEXIT finishing coat	40 50 50	100-140		Machinery for foodstuffs packaging
A	additional antimicrobial coating for all finishes except F3.4 and F3.5	40			
Z	Compensation of contour depressions and crevices with seam sealer on polyurethane basis				

1-K = single component 2-K = two-component, TFD = Dry film thickness max. [µm], HS = high solids

Selecting a suitable motor

A number of factors must be taken into account for the selection of a motor. These include, e.g. its power, speed, speed range, torque and size, as well as the required motor options and the prevailing ambient conditions. The following list provides some assistance for the selection of a suitable motor.

The following section describes the extended operating points for IE2 motors, at which higher powers can be obtained from the motors. The speed at this operating point differs from the nominal speed. In addition, switchable pole motors with 2 nominal speeds are described.

Designation of motors

Motors are designated according to their axle height and their nominal power. The axle height is the distance between the centre of the output shaft and the foot surface of a foot-mounted motor. According to DIN EN 50347, motors are stamped with a nominal power. Compliance with this standard means that motor powers increase in standardised steps, e.g. for 4-pole motors from 0.12kW to 0.18kW to 0.25kw etc. The power which a motor can actually deliver in compliance with its heat class is generally higher than the nominal power, but lower than the next highest power level.

Selection of motor power

The power or torque which the machine requires is important for the selection of the motor.
In this catalogue, the power is stated in kilowatts [kW] and the torque in Newton-metres [Nm]. Calculation of the required power or torque is complex, depending on the application.
The following descriptions and technical data supoort a drive design which is carried out with calculation programmes such as the drive design program NORD-AAP or with the aid of collections of technical formulae. The power stamped on the motor type plate depends on the operating mode of the motor.

Determination of approximate speed

Due to the versions, this catalogue differentiates between 2, 4, 6 and 8-pole motors. The rounded idling speed of these motors is shown in the following table.

Number of poles	2	4	6	8
Idling speed [min^{-1}] (rounded upwards)	3000	1500	1000	750

4-pole motors are used most often Due to its commonness,this motor has the shortest delivery time and has a good power to weight ratio and price.
For geared motors, the output speed of the gear unit is determined by the speed of the motor and the gear ratio.

The following relationship applies:

$$\textbf{Gear unit output speed} = \frac{\textbf{Motor speed}}{\textbf{Gear ratio}}$$

Motor speeds change slightly under load. The higher the load (torque to be produced), the lower the speed. This effect is more pronounced with smaller motors. Nominal values described in this catalogue and on the type plate, always relate to a speed at the nominal power.

Operating modes

Explanation of the most important operating modes

S1

Continous operation under constant load

S2

Short term operation under constant load
A thermal stady state is not achieved.
The motor is only switched on again if the motor has cooled to a maximum of 2K above the temperature of the cooling air.

Example: S2-10min.
Recommended values for the determination: 10, 30 min

S3

Intermittent operation, consisting of identical load cycles with phases of constant load and then pauses. The frequency and size of the load on start-up must not have a significant influence on heating. Unless otherwise agreed a cycle time of 10 min is assumed. The relative switch-on period is given by the proportion of the operating time to the cycle time.
Example: S3-40% switch-on time: 4 min. load - 6 min. pause
Recommended values for the determination: **70** %
Differing values on request

S4

Cyclic operation with frequent switching
see ⇨📖 A33 **"External fan (F)"**

S6

Continous operation with intermittent load, consisting of identical load cycles with phases of constant load and then idling.
The cycle time and relative switch-on time are as for S3.
Example: S6 - 40% switch-on time
Recommended values for the determination: **80** %
Differing values on request

S9

Continous operation with non-periodic changes of torque and motor speed.
Operation during which in general, the load and speed changes in a non-periodic manner within the permissible operating range.
In this mode there are frequent overloads, which must be far below the maximum load.
Example: S9
Details of an average power.

Continous operation

The listed values for NORD motors in this catalogue are valid for continuous operation (S1). In practice, motors must often only operate for short periods or with frequent interuptions.

Power increase in short-term and intermittent operation

In short-term (S2) and intermittent operation (S3), electrc motors may be subjected to greater loads than in continuous operation (S1). The factors for the permissible increase in power compared withe the rated power (PN) are contained in the following table. However, in principle, the power may only be increased to the level where the relative breakdown torque (M_K/M_N) divided by the power increase factor results in a value of ≥1.6. In individual cases, larger factors than those stated in the table may result. These will be stated on request.

S2	Permissible power	S3	Permissible power	S6	Permissible power
10min	1,40 x P_N	25%	1,33 x P_N	25%	1,45 x P_N
30min	1,15 x P_N	40%	1,18 x P_N	40%	1,35 x P_N
		60%	1,08 x P_N	60%	1,15 x P_N

The design of the motor and categorisation of the operating mode should be carried out by NORD in cases of higher switch-on frequency and heavy starting loads.

For this, details must be provided about:

- The relative switch-on time
- Switch-on frequency
- External moment of inertia
- Graph of the load torque against speed
- Type of braking

Total torque

The total torque necessary to drive a machine is comprised of the
- static torque
- and the dynamic torque

Static torque

The static torque is necessary in order to operate a machine at constant load and speed. The static load is calculated according to the machine to be driven, taking friction, efficiency, lifting loads etc. into account.

Dynamic torque

Torque is also required in order to accelerate inertial masses. The inertial mass is comprised of the mass to be accelerated and the rotating mass of the motor itself (rotor).

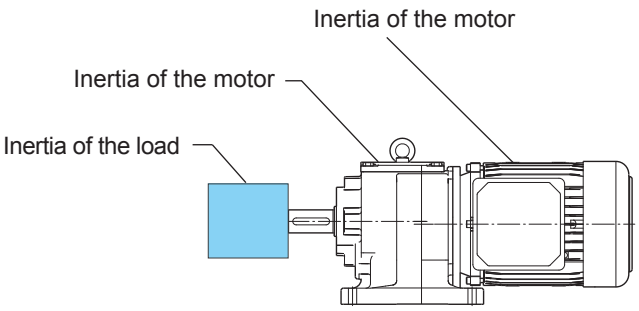

To calculate the acceleration and braking characteristics of a drive, all are added to accelerating moments of inertia for the motor shaft.

$$J_x = \frac{J_L}{i_{Ges}^2}$$

J_x	external moment of inertia reduced onto the motor shaft	[kgm²]
J_L	moment of inertia of the load	[kgm²]
i_{Ges}	Gear ratio	

If a gear unit is used between the load and the motor, the calculated moment of inertia is reduced by the square of the gear ratio. The moment of inertia of the gear unit can usually be neglected, as it is small in relation to the moment of inertia of the motor.

The motor torque is calculated by means of the following formula:

$$M_a = \frac{\pi}{30} \cdot J \cdot \frac{\Delta n}{t_a}$$

The acceleration torque M_a of a motor depends on the total moment of inertia, reduced onto the motor shaft J, the required change in speed Δn and the required acceleration time t_a .

⚠ For mains operation, the acceleration time must not exceed 4 sec. in order not to overheat the motor.

In this catalogue, the starting torque M_A for mains operation is described in relation to the rnominal torque M_N e.g. $M_A / M_N = 2.3$.
Due to the torque curve from standstill to the nominal speed, approx. 90% of the starting torque can be used during the acceleration period (see ⇨📖 A21 Graph of the torque curve).

For inverter operation with NORD frequency inverters, the relationship M_A / M_N is 2.0 for a period of 60 seconds and is therefore less than with mains operation.

Power, torque, speed

The relationship between power, torque and speed is described by the following formula, in which for geared motors the output speed and the output torque of the gear unit or alternatively, for motors, the speed of the motor and the motor torque can be entered. The motor power which is stamped on the motor type plate and stated in the catalogue is the power which is output mechanically. Due to the degree of efficiency of the motor, the electrical power consumed is considerably greater than the power which is output.

$$P_1 = \frac{M_2 \cdot n_2}{\eta \cdot 9550}$$

P_1	Power	[kW]
M_2	Torque	[Nm]
n_2	Speed	[min⁻¹]
η	Efficiency of the gear unit	[%]

The illustration shows the example of the torque graph for a 90kW asynchronous motor with mains operation. The load characteristic curve may vary according to the application. The intersection of the load curve and the motor curve represents the operating point of the motor. The operating point usually differs from the nominal point, which explains the deviation between the actual speed in the application and the nominal speed according to the catalogue.

Torque curve

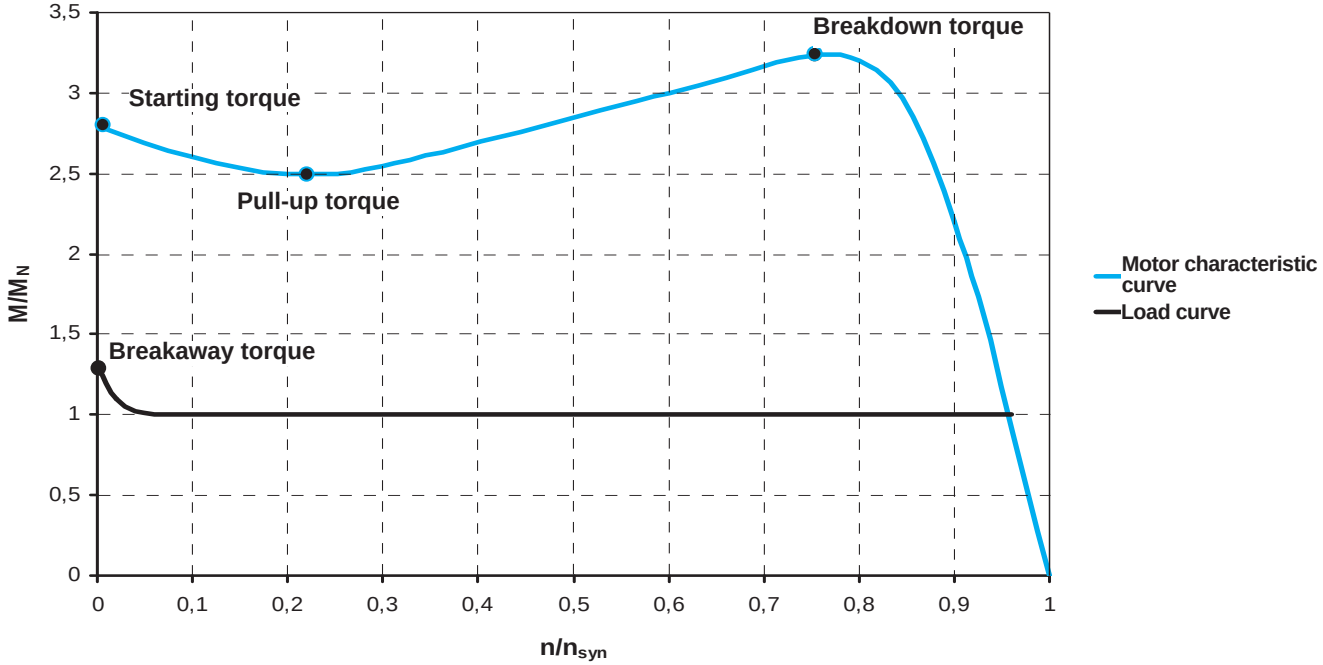

Load graph and motor characteristic curve (starting with mains)

Comparison of the torques of NORD motors

Years of experience with the selection of motors for practical applications has resulted in knowledge, which can only be roughly transferred to the new IE2 motors. In spite of mainly unchanged dimension, the motors differ with regard to their torques. The rnominal torque M_N has largely remained unchanged, as the rated power remains constant and the rated speeds have also hardly changed.

NORD motors have high starting and breakdown torques. For the most part, NORD IE2 motors have even higher values. These high starting torques can be used to support start-up processes in which, e.g in order to change from static friction to dynamic friction, or in order to start pumps.

Comparison of NORD EFF2 motors with IE2

In order to achieve the higher efficiency of IE2 motors, amongst other things, more sheet metal is used in the stator and the rotor, which in turn increases the moment of inertia of the motor in comparison with an EFF2 motor. This is more than compensated by the starting torque, which is also increased. Usually, in mains operation and without load, IE2 motors accelerate about 10% faster than EFF2 motors. This is more or less pronounced in individual motors.

The following table provides the exact values in the column "**Start-up time without load**". Negative values mean a shorter start-up time, while positive values mean a longer starting time, expressed in % of the start-up time.

Motor (4-pole)	Starting torque			Breakdown torque			Moment of inertia			Start-up time without load
P_{Nom} [kW]	EFF2 M_A/M_N	IE2 M_A/M_N	Deviation in percent %	EFF2 M_K/M_N	IE2 M_K/M_N	Deviation in percent %	EFF2 [kgm²]	IE2 [kgm²]	Deviation in percent %	Deviation in percent % in starting characteristic
0,75	2,0	3,0	50	2,10	3,10	48	0,0015	0,0019	31	-12
1,10	2,3	3,1	35	2,60	3,50	35	0,0024	0,0034	45	7
1,50	2,3	3,3	43	2,60	3,50	35	0,0031	0,0039	25	-10
2,20	2,3	3,7	61	3,00	4,30	43	0,0045	0,0075	67	10
3,00	2,5	3,1	24	2,90	3,50	21	0,0060	0,0075	25	2
4,00	2,3	3,1	35	2,80	3,60	29	0,0110	0,0140	27	-3
5,50	2,1	3,1	48	2,70	3,50	30	0,0240	0,0320	33	-3
7,50	2,5	3,3	32	2,80	3,90	39	0,0320	0,0350	9	-19
11,00	2,4	2,9	21	2,90	3,40	17	0,0500	0,0670	34	13
15,00	2,9	3,0	3	3,50	3,50	0	0,0670	0,0920	37	35
18,50	3,2	2,9	-9	3,80	3,20	-16	0,0800	0,1300	63	86
22,00	3,3	2,8	-15	3,80	3,10	-18	0,0920	0,1600	74	109

The large thermal reserves of IE2 motors can be taken into account in the design of the gear unit. The following table describes the maximum permissible continuous thermal load. Overloads as per IEC 60034-1 are also permissible.

1500 / 1800 1/min
50 / 60 Hz

Extended operation range

Type	P_N [kW]	f [Hz]	P_{S1max}* [kW]	U [V]	ΔU [%] +/-	n_N [1/min]	M_N [Nm]	I_N [A]	cos φ	η [%]
80 SH/4	0,55	50	0,75	400	5	1355	5,28	1,80	0,79	75,0
		60	0,8	460	10	1675	4,58	1,63	0,78	79,0
80 LH/4	0,75	50	1,1	400	5	1325	7,9	2,50	0,84	75,0
		60	1,125	460	10	1670	6,5	2,12	0,82	81,0
90 SH/4	1,1	50	1,5	400	10	1390	10,4	3,11	0,86	81,2
		60	1,5	460	10	1715	8,4	2,67	0,84	84,4
90 LH/4	1,5	50	2,2	400	5	1345	15,5	4,67	0,86	79,3
		60	2,25	460	10	1680	12,8	4,02	0,84	83,8
100 LH/4	2,2	50	3,3	400	10	1395	22,7	6,64	0,87	82,7
		60	3,3	460	10	1720	18,4	5,63	0,86	85,9
100 AH/4	3	50	3,5	400	10	1395	24,1	7,39	0,82	83,0
		60	4	460	10	1700	22,6	6,96	0,84	85,7
112 MH/4	4	50	5	400	10	1425	33,7	9,79	0,86	86,0
		60	5,5	460	10	1730	26,3	9,21	0,86	87,8
132 SH/4	5,5	50	7,5	400	10	1440	50,2	14,1	0,89	87,3
		60	8,25	460	10	1740	45,6	13,3	0,89	88,2
132 MH/4	7,5	50	9,5	400	10	1445	63,4	18,2	0,84	87,3
		60	11,25	460	10	1740	62,3	18,8	0,86	87,9
132 LH/4	9,2	50	10	400	10	1440	66,9	21,1	0,78	88,6
		60	11,5	460	10	1740	63,5	20,3	0,80	89,6
160 SH/4	9,2	50	11	400	10	1460	72,7	19,8	0,90	89,6
		60	13	460	10	1755	71,4	20,2	0,90	90,0
160 MH/4	11	50	15	400	10	1445	100	27,5	0,90	88,2
		60	16,5	460	10	1750	91	25,8	0,90	89,3
160 LH/4	15	50	18,5	400	10	1455	122	33,7	0,89	89,7
		60	22,5	460	10	1750	123	35,1	0,89	89,9
180 MH/4	18,5	50	22,5	400	10	1470	147	41,2	0,87	91,3
		60	27,5	460	10	1765	149	43,9	0,88	91,5
180 LH/4	22	50	26	400	10	1465	170	47,1	0,88	91,1
		60	30	460	10	1770	163	46,7	0,89	91,7
200 XH/4	30	50	35	400	10	1460	230	66,5	0,84	90,3
		60	40	460	10	1760	218	64,6	0,86	91,1

* Supplements to the motors ⇨ 🕮 C14

Inverter operation

Frequency inverter operation

In comparison with simple mains operation, the possibilities of use of three-phase motors and geared motors are considerably extended by the use of frequency inverters.

The advantages at a glance:

- Continuous speed regulation over a wide range
- automatic matching of speed to load due to slip compensation with vector inverters
- Programmable acceleration ramp for gentle starting, which results in less stress on the gear unit and the application and high starting currents are avoided.
- Controlled, adjustable deceleration to a standstill (in some cases only a holding brake is required)
- Many software-based functions are available for the control and monitoring of the drive unit, up to dynamic positioning with NORD inverters.
- Possibility of energy savings due to adaptation of the process, optimisation, and energy saving functions of NORD inverters

NORD three-phase motors (non pole-switchable) are suitable for operation with normal frequency inverters. Due to the use of double-lacquered wire and phase isolation, the windings are protected against damage due to rapid voltage increase speeds, such as occur with modern inverters with pulse-width modulation. The use of du/dt or sinus filters is necessary for the inverter operation of motors in excess of 500V.

With inverter operation, the motors can continuously produce their full nominal power.
In general, there are no restrictions to the motor options for inverter operation. The motor brake and external fan must not be supplied from the motor power supply.

The possible type of encoder system (incremental or absolute encoders) depends on the requirements of the application, the type of signal (TTL, HTL, SSI, CANopen) from the frequency inverter type which is used, or its encoder interface.

In general it is recommended that each speed-regulated drive unit is equipped with temperature sensors which are evaluated by the frequency inverter. This protects the motor against overheating.

Operation with frequency inverters - characteristic curves and planning

Here, we would like to present and answer a few important questions which contribute to the optimal use of frequency inverter drive units, for example:

- lowest possible frequency or speed,
- frequency increase above 50 Hz,
- power increase of three-phase motors by means of the 87Hz characteristic curve,
- extended speed adjustment range due to the 100hz characteristic curve.

In principle, a three-phase asynchronous motor can be operated from 0 to twice the nominal speed. The maximum speed is determined by mechanical constraints.

Lowest possible frequency or speed

At low speeds, cooling by the motor fan is considerably reduced. As a result, the typical thermal losses of the motor are no longer adequately dissipated and overheating may occur in continuous operation. For operation at the nominal load, this range begins at speeds < 1/2 of the rated speed (25Hz).

This can be remedied by the use of an external fan, which rules out thermal problems.

Continuous operation is then possible with the lowest speeds (2 x 5Hz slip frequency).

Alternatively, the motor can be dimensioned larger.

With this, the drive unit is operated at a reduced motor load. Therefore, there is less power loss and an additionally increased thermal reserve due to the increased size of the motor.

Possible torques, overload and smooth running precision essentially depend on the performance of the frequency inverter used. If necessary, a low required speed or speed “0” is only possible by means of speed feedback from a rotary encoder.

Design according to the 50Hz characteristic curve (standard version)

Adjustment range 1 : 10 (5 - 50 Hz)

Three-phase asynchronous motors are designed for a nominal operating point (e.g. 400V/50Hz). The motor can output its nominal torque up to its nominal frequency.

Depending on the frequency, the motor speed for a 4-pole motor can be calculated as follows:

$$n_{Hz} = [(1500\ U/min \cdot f_{Hz}) / 50Hz] - \text{Slip speed}$$

For 4-pole motors, the relationship between power and torque, depending on the speed is as follows:

$$M = \frac{P \cdot 9550}{n}$$

A reduction of speed <50Hz does not result in an increased torque, as is the case with adjustable gear units, but rather to a reduction in power. In this case, the current remains constant for a constant torque and the voltage reduces with the frequency.

A further increase in frequency in the field weakening range therefore results in a torque reduction.

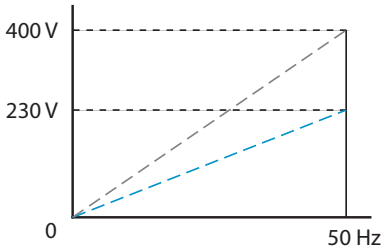

Above the nominal frequency the available torque reduces, as the voltage is no longer increased at higher frequencies. The magnetic flux reduces. This range is known as the field weakening range.

Physical conditions for constant torque:

M = constant	⇨	Φ = constant	⇨	U/f = constant
Torque		Magnetic flux		Voltage/Frequency

The condition V/F = constant can maximally only be realised by the frequency inverter up to the nominal operating point (V_{nom}/f_{nom} = constant) A further voltage increase above that of the mains voltage is technically impossible.

The torque reduces according to the relationship

$$^1/_x \Rightarrow {}^{M_{AB}}/_{M_{NOM}} = {}^{f_{Nenn}}/_{f_{AB}}$$

minus further losses due to the increased frequency

Example:

1,4 nominal frequency = 70 Hz

$$M_{70Hz} = \frac{f_{NOM}}{f_{AB}} \cdot M_{NOM} = \frac{50Hz}{70Hz} \cdot M_{NOM} = 71\% \cdot M_{NOM}$$

Under certain circumstances, the field weakening range begins before the actual point for the type is reached.

Possible causes of this are voltage losses due to the frequency inverter itself, as well as chokes or long cables.

In the field weakening range, the reduced overload capacity of the drive must be especially taken into account, as the field weakening has a greatly reduces the breakdown torque of the motor.

The effect is explained in the following 50 Hz characteristic curve:

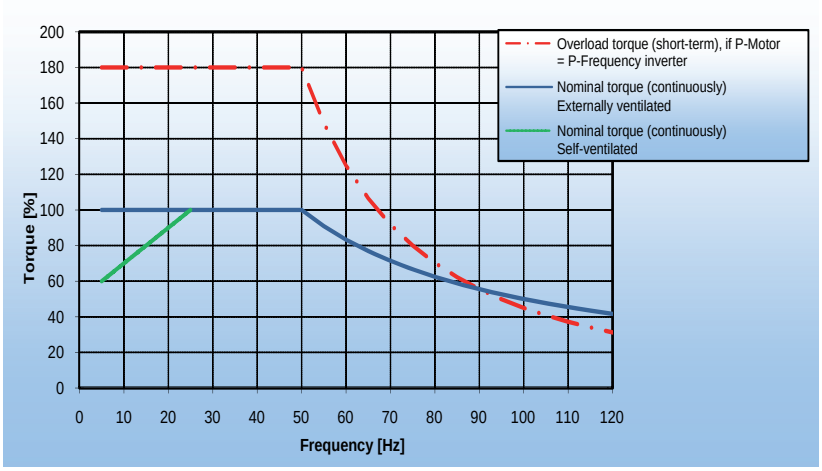

The thermal limit only applies for continuous operation.
The usual start-up and overload torques are still available from the frequency inverter for short-term operation.

This must be taken into consideration if the application does not require a constant torque over the entire adjustment range.

For example, centrifugal pumps and fans have a torque characteristic curve which increases in a quadratic function, which favours operation at low speeds.

Design according to the 87Hz characteristic curve (for 4-pole asynchronous motors)

Adjustment range 1 : 17 (5 - 87 Hz)

Advantages of this design are an increase in the motor power and speed above the nominal value for the motor, with a constant torque. Therefore there is a larger adjustment range of 1:17 or greater, or a smaller motor may be selected for a given power and adaptation of the gear ratio.
This is also accompanied by an improvement in efficiency.

Disadvantages are louder (fan) noise and the possible need for an additional gear stage.

With the 87hz characteristic curve, the same thermal limits as for the 50Hz design apply to the low speed range ⇨📖A24.
However, the field weakening only starts above the break frequency of 87Hz.

This form of operation is possible if the following conditions are taken into account:

- The motor must be connected for voltages from 3~230V, i.e. a → delta circuit for 230/400V motors (motors with 400/690V windings are not suitable for this type of operation and mains with 230V per phase)
- The frequency inverter must have an operating voltage from 3~400V and the nominal output current must at least correspond to the delta current of the motor. As a result:

$$\frac{\textbf{Inverter power}}{\textbf{Nominal motor power}} > 1{,}73$$

- Due to the higher maximum motor speeds it may be necessary to re-determine the reduction ratio of the gear unit

Note

With this configuration of a **230V/50Hz motor on a frequency inverter with 400V**, the nominal operating point is at 230V/50Hz and the extended operating point is at 400V/87Hz.
Due to the increase of the operating point from 50Hz to 87Hz with constant torque, the motor power increases to the same extent by a **factor of √3 = 1.73**

Operation of a 230 V motor with 400 V is totally uncritical as the motor windings are designed for test voltages of > 2,000V.

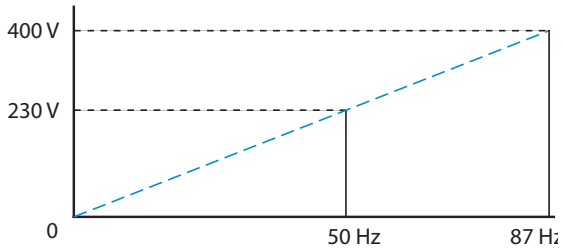

The effect is explained in the following 87Hz characteristic curve:

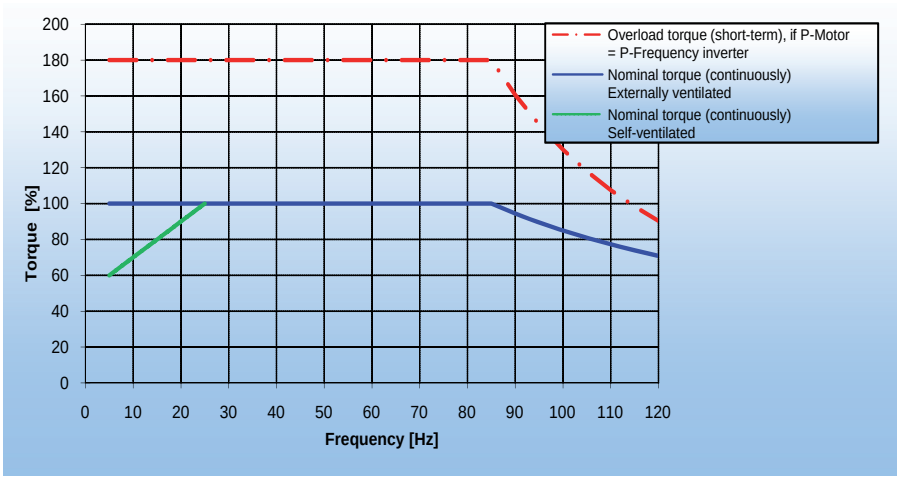

It should be noted that the nominal torque of the motor does not increase. In particular, this does not alter the characteristics in the range from 0 to 50Hz. The normal adjustment range is 1:17 or higher.

Design according to the 100Hz characteristic curve (for 4-pole asynchronous motors)

Adjustment range 1 : 20 (5 - 100 Hz)

The field weakening range includes the entire range up to the 100Hz point, which results in a very large adjustment range. Smaller speeds can be better used, as the three-phase motor is operated with a reduced torque.
This means that the motor is not operated at its thermal limit, but in spite of this works on a vector-controlled frequency inverter using precisely matched motor data.

This form of operation is possible if the following conditions are taken into account:

- The motor must be connected for voltages of 3~230V, i.e. for 230/400V motors this is a → delta circuit
- New 100Hz motor data must be calculated → Getriebebau NORD
- The frequency inverter must have an operating voltage of 400V
- The frequency inverter power must be one standard level higher than that of the motor
- Due to the higher maximum motor speeds it may be necessary to re-determine the reduction ratio of the gear unit

Note

In this configuration the nominal operating point of the DS standard motor is at 400V/100Hz. This is possible with the recalculation of the motor data by us.

The resulting torque is available over the entire adjustment range (5...100Hz) and is somewhat lower than the standard value for the relevant motor size.

According to the size of the motor, the reduction of the output torque is between 30 and 40%, however this is compensated by a larger gear reduction for the same output speed.

The effect is explained in the following 100Hz characteristic curve:

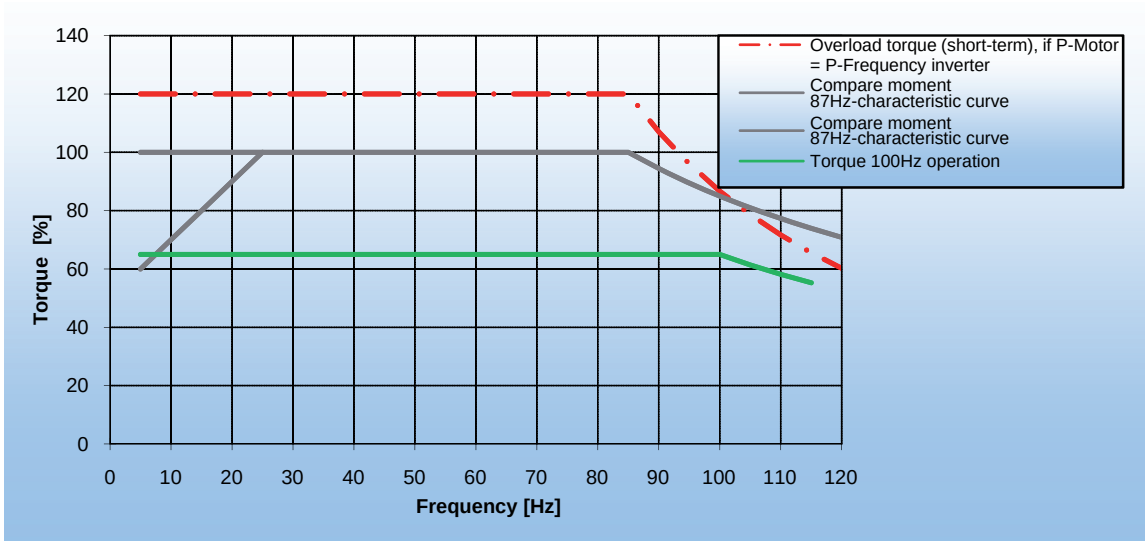

Selection of the frequency inverter and motor

The frequency inverter is selected according to the mains voltage and the nominal current of the motor (taking the characteristic curves into account), whereby: **Nominal inverter output current ≥ Nominal motor current**. For 4-pole motors, the selection is usually according to the performance data.
4-pole asynchronous motors have become established as the market standard. However, in principle motors with other numbers of poles can be operated on frequency inverters. In this case, the inverter must be selected according to the current and the speed adjustment range must be planned separately.
In addition to the control cabinet inverters SK500E and SK700E (see brief catalogues F3050 and F3070), NORD also supplies decentralised SK200E frequency inverters with high protection classes for direct mounting on the motor (⇨🕮 brief catalogue F3020). The description above is also valid in this case, although several special features should be noted with regard to the motor options, e.g. direct brake control by the frequency inverter. For further details please refer to the brief catalogues F3020 and F3070 as well as the operating instructions BU200 and BU750.

Design with the operating point at 70Hz

A further variant to obtain an increased adjustment range is provided by a design with the operating point at 70Hz. The procedure uses the 50Hz characteristic curve, but sets the gear ratio so that the maximum speed is achieved at 70Hz. An additional gear stage is rarely necessary for this. There are no changes to the frequency inverter and the motor in comparison with the 50Hz characteristic curve.

Advantages:
- the adjustment range increases to 1 : 14 (5 - 70 Hz)
- higher torques over large areas of the adjustment range, especially 5 - 50 Hz

Due to the field weakening, above a frequency > 70 Hz the torque reduces to a greater extent than it increases due to the higher gear ratio.

Calculation of torque

Typical geared motor, mains operation	Typical geared motor on frequency inverter
• n_2 = 100 U/min • M_2 = 100 Nm • f = 50 Hz	• n_2 = 10 - 100 U/min • M_2 = 100 Nm • f = 7 - 70 Hz (approx.)
P = (100 Nm / 9550) ▪ 100 U/min P = 1,05 kW, selected = 1,1 kW motor 90S/4	P = (100 Nm / 9550) ▪ 100 U/min P = 1,05 kW, selected = 1,1 kW motor
i = 1500 U/min / 100 U/min = 15	i = 2100 U/min / 100 U/min = 21
$M_{N(50Hz)}$ = (1,1 kW ▪ 9550) / (1500 U/min / 15)	$M_{N(50Hz)}$ = (1,1 kW ▪ 9550) / (1500 U/min / 21)
$M_{N(50Hz)}$ = 105 Nm	$M_{N(50Hz)}$ = 147 Nm $M_{N(70Hz)}$ = 105 Nm
M_A = 2,3 ▪ 105 Nm = 240 Nm 2,3 = M_A/M_N with 90S/4 motor	M_A = 1,7 ▪ 147 Nm = 250 Nm with assumed 1.7 x inverter overload

Maximum motor speeds

Motors have a maximum speed of 4200rpmor fmax = 140Hz.

⚠ Special measures (Viton sealing rings on the A + B side) are necessary above the speeds described below. All details relate to the operating mode S1, continuous operation. For short periods, the motors can deliver higher speeds without modification.

Type	Maximum speed [rpm]
63	2500
71	2500
80	2860
90	3400
100	3500
112	3500
132	3300
160	3200
180	3100

Abbreviation	Significance	Unit
ED	Relative switch-on time	[%]
P_N	Nominal power	[kW]
n_N	Nominal speed	[min^{-1}]
n_{syn}	Synchronous speed:	[min^{-1}]
I_A	Start-up current	[A]
I_N	Nominal current	[A]
I_A / I_N	Start-up current / nominal current (Relationship of start-up current to nominal current)	[–]
cos φ	Power factor	[–]
η	Efficiency	[%]
M_A	Starting torque	[Nm]
M_N	Nominal torque	[Nm]
M_A / M_N	Starting torque / nominal torque (relationship of starting torque to nominal torque)	[–]
M_K	Breakdown torque	[Nm]
M_K / M_N	Breakdown torque / nominal torque (relationship of breakdown torque to nominal torque)	[–]
M_B	Braking torque	[Nm]
J	Moment of inertia	[kgm^2]
J_x	external moment of inertia reduced onto the motor shaft	[kgm^2]
J_L	Moment of inertia of the load	[kgm^2]
U	Voltage	[V]
L_{PA}	Noise level	[dB(A)]
L_{WA}	Noise level	[dB(A)]
t_E	Heat-up time in blocked condition (Exe motors)	[s]
Z_o	Switching frequency without load	[1h]
S_F	Service-factor (only for NEMA)	[–]
T_{amb}	Ambient temperature	[°C]
Code Letter	The **Code Letters** are a measure of the mains load for direct switch-on of the motor. These are defined in the context of the NEMA standard and are coded with a letter from A to V (only for NEMA).	

Options

Abbreviation	Significance	⇨📖	Standard / IE1	IE2 / IE3	AR	KR	CUS
BRE +	Brake / braking torque + sub-option	B2-19	X	X	X	X	X
DBR +	Double brake + sub-option	B15	X	X	X	X	X
RG *	Corrosion protected version	B13	X	X	X	X	X
SR *	Dust and corrosion protected version	B13	X	X	X	X	X
IR *	Current relay	B14	X	X	X	X	
FHL *	Lockable manual release	B13	X	X	X	X	X
HL	Manual brake release	B13	X	X	X	X	X
MIK	Micro switch	B13	X	X	X	X	X
AS55	Outdoor installation	A52	X	X	X	X	
* not with DBR							
BRB	Standstill heater / Brake	B14	X	X	X	X	
NRB1/2	Noise-reduced brake	B14	X	X	X	X	
ERD	External earth terminal	A30	X	X	X	X	
TF	Thermistor, PTC resistor	A30,50	X	X	X	X	X
TW	Thermostat, bimetallic switch	A30,50	X	X	X	X	X
SH	Standstill heating	A30	X	X	X	X	X
WU	Silumin rotor	A30	X				X
Z	Heavy fan, cast-iron fan	A31	X				X
WE +	2. shaft end	A31	X	X	X	X	X
HR	Handwheel	A30	X	X	X	X	
RD	Protective shield	A30	X	X	X	X	X
RDT	Protective shield, textile fan cowl	A31	X	X	X	X	X
RDD	Double fan-cowl	A30	X	X	X	X	X
AS66	Outdoor installation	A51,52	X	X	X	X	
OL	Without fan	A32	X				X
OL/H	Without fan, without cover	A32	X				X
KB	closeable condensation hole	A30	X	X	X	X	X
MS	Plug-on motor coupling	A39	X	X	X	X	X
EKK	One-piece terminal box	A31	X	X	X	X	X
KKV	Terminal box, encapsulated	A31	X	X	X	X	X
FEU	Moisture protection insulation	A30	X	X	X	X	X
TRO	Tropicalised insulation	A31	X	X	X	X	
MOL	Dairy version	A31	X	X	X	X	
VIK	Regulation - Vereinigung Industrieller Kraftwirtschaft [Association of the Industrial Power Industry]	A30	X	X	X	X	
F	External fan	A33	X	X	X	X	X
RLS	Back stop	A32	X	X	X	X	X
IG1 (IG11, 12)	Pulsed incremental encoder 1024	A36	X	X	X	X	X
IG2 (IG21, 22)	Pulsed incremental encoder 2048		X	X	X	X	X
IG4 (IG41, 42)	Pulsed incremental encoder 4096		X	X	X	X	X
MG	Magnet-Incremental encoder	A34	X	X	X	X	X
SL	Sensor bearings	A35	X	X	X	X	X
IG	Incremental encoder	A36	X	X	X	X	X
IG.P	Incremental encoder with plug	A37	X	X	X	X	X
IG.K	Incremental encoder with terminal box	A37	X	X	X	X	
AG	Absolute encoder	A38	X	X	X	X	X
RE	Resolver	A38	X	X	X	X	X
OKA	without terminal box						X

External earth terminal (ERD)

A corrosion-resistant earth terminal in the form of a flat terminal or terminal strap is fastened to the motor housing.

E.g.: 112 M/4 **ERD**

Thermal motor protection (⇨🕮 A50)

NORD can supply two heat protection components for an extra charge.

- **TW** = Bimetal temperature sensor
- **TF** = Thermistor temperature sensor

Protective cover (RD)

Protection against rain and entry of foreign bodies for vertical installation with the shaft pointing downwards. For explosion protected motors as per DIN 50014 the protective cover is generally mandatory for vertical installation with the shaft pointing downwards.

E.g.: 112 MH/4 **RD IM V5** (⇨🕮 C24 and above)

Double fan cowl (RDD)

Protection against rain and snow and entry of foreign bodies for vertical installation with the shaft pointing downwards. Suitable for water jets from all directions.

E.g.: 132 SH/4 **RDD IM V5** (⇨🕮 C24 and above)

Condensation drain hole (KB)

According to the installation position, condensation drain holes are provided at the lowest point of the A or B bearing cover. These are closed with cheese head screws.

⚠ The version must be stated!

E.g.: 71 S/4 **KB IM B3** (⇨🕮 C24 and above)

Before commissioning and during operation, the condensation drain holes must be opened regularly in order to drain the condensation.

Standstill heating (SH)

A standstill heater must be used in case of severe temperature fluctuations, high humidity or extreme climatic conditions. This prevents condensation inside the motor.
The standstill heater must never be switched on while the motor is running!
For versions with TF or TW. the brake terminalbox is used.
⚠ Dimensions!

Available version: 110 V; **230 V**; 500 V

⚠ Please state the required connection voltage!

E.g.: 100 LH/4 **SH 230V**

Increased moisture and acid protection (EP)

Measures: The windings, stator hole and rotor are treated with a special lacquer.

Silumin rotor (WU)

For drives in conveyor applications without inverter supply; e.g.: 90 S/8-2 **WU**

⚠ **Not possible for IE2 motors!**

Handwheel (HR)

Motors with a handwheel mounted on the 2nd end of the shaft; e.g.: 132 MH/4 **HR** (⇨🕮 C38)

Moisture protection insulation (FEU)

For motors which are to be used in a damp environment, we recommend the use of the version with moisture protection insulation.

E.g.: 71L/4 **FEU**

VIK version (VIK)

Motors compliant with the technical requirements of the “Verband der Industriellen Energie- und Kraftwirtschaft”.

⚠ Only available as geared motor!

E.g.: 100 LH/4 **VIK** Please enquire!

2. shaft end (WE)

Motors with a second shaft end on the B side. For motors with and without a brake. This option cannot be combined with the options; (⇨📖 C25-C35)

- External fan (F)
- Attached rotary encoder (IG)
- Protective cover (RD)
- Protective cover, textile fan cowl (RDT)
- Double fan cowl (RDD)

Please ask about the power which can be transferred and the permissible radial forces on the 2nd end of the shaft.

E.g.: 112 MH/4 **WE**

Protective cover, textile fan cowl (RDT)

These motors have a fan cowl which is specially designed for use in the field of textiles. The lack of a normal ventilation grille prevents the build-up of flakes and fluff, which could impair the cooling of the motor.

⚠ possible for motor types 63 to 132;
e.g.: 80 S/4 **RDT IM V5** (⇨📖 C24 and above)

Tropicalisation (TRO)

For motors used under extreme climatic conditions (tropics) we recommend the tropicalised versions.

E.g.: 71 L/4 **TRO**

Dairy version (MOL)

Motor with cooling ribs
Measures:

- Condensation drain hole (KB)
- Encapsulated terminal box (KKV)
- Knurled screws for fastening the fan cowl
- V2A stainless steel type plate

⚠ The version must be stated!
E.g.: 80 S/4 **MOL IM B6** (⇨📖 C24 and above)

One-piece terminal box (EKK)

Version with a small, one-piece terminal box. Note the cable gland (⇨📖A50).

E.g.: 63 L/6 **EKK** (⇨📖C40)

Not possible with brake option!

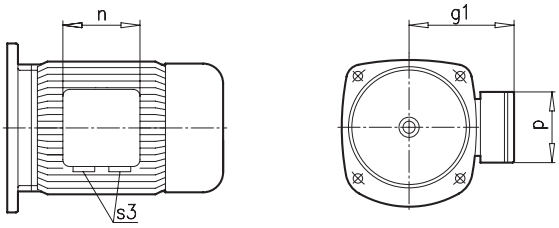

Type	g1 [mm]	n [mm]	p [mm]	S3 (EKK)
63	100	75	75	2x M16 x 1,5
71	109	75	75	2x M16 x 1,5
80	124	92	92	2x M20 x 1,5
90	129	92	92	2x M20 x 1,5
100	140	92	92	2x M20 x 1,5
112	150	92	92	2x M20 x 1,5
132	174	105	105	2x M25 x 1,5

Encapsulated terminal box (KKV)

Terminal box base encapsulated in direction of interio.

E.g.: 80 LH/4 **KKV**

Cast iron fan (Z)

Motor with cast iron fan, for more gentle starting with mains operation.

Type	Moment of inertia J_Z [kgm^2]
63 S/L	0,00093
71 S/L	0,0020
80 S/L	0,0048
90 S/L	0,0048 0,0100 (at the brake 40 ⇨📖 B11)
100 L/LA	0,0113
112 M	0,0238
132 S/M/MA	0,0238

E.g.: 90 S/8-2 **Z**
Motor length as for brake motors!

⚠ **Not possible for IE2 motors!**

Back stop (RLS)

Back stops are used in order to prevent reverse rotation due to the load while the motor is switched on.
With a back stop, the drive can only be in the direction of rotation. The required direction of rotation of the drive must be stated with the order.

E.g.: 100 LH/4 **RLS CW**

⚠ Caution with motors with larger pole numbers (>4) and FI operation: the lift off speed must be complied with! The back stop only works without wear above the lift off speed.

Type	RLS [Nm]	Lift of speed n [min^{-1}]	Motor extension x_{RLS} [mm]
80	130	860	64
90	130	860	75
100	130	860	91
112	370	750	93
132	370	750	107
160	890	670	135
180 .X	890	670	135
180	1030	630	127
200	1030	630	127

See brake motors for motor lengths!

⚠ The required direction of rotation of the drive must be stated with the order!

CW = Clockwise - Clockwise direction of rotation, **Right-hand rotation**

CCW = CounterClockwise - Counter clockwise direction of rotation, **Left-hand rotation**

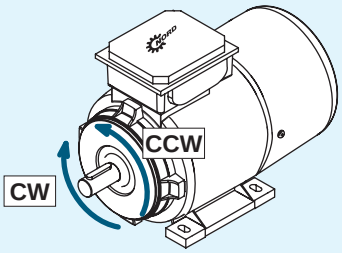

Without fan (OL)
Without fan / without fan cover (OL/H)

With these versions, the motor is supplied without a fan (OL) or without a fan and without a fan cover.

E.g.: 63 S/4 **OL/H** (⇨📖 C40)

Advantages: There is no noise from the fan, the installation length is reduced with OL/H. For confined installation spaces.

⚠ Reduction in power or only for operating mode S3-40% Not possible for efficiency class IE2!

Motor protection switch

Motors can be monitored by motor protection switches fitted by the customer. Due to their functional principle, such devices are especially suitable for protecting motors against starting against a blockage or a load with is too large.

⚠ If the nominal current of the motor changes, e.g. due to the change to an IE2 motor, this must be taken into account for the setting of the motor protection switch.

External fan (F)

Typical cases of use are drive units which are controlled by a **frequency inverter**, which are under full torque at low speeds for long periods of time, or drive units in cyclical operation with high switching frequencies (operating mode S4). The external fan is integrated into the fan cowl of the three-phase motor.
For the dimensions of the extension, please refer to ⇨🕮 C36-37.

Care must be taken that the external fan is connected separately from the three-phase motor. The motor should also be equipped with a temperature sensor to protect it against failure of the external fan.

Type suffix **F** = External fan with protection class IP66 with separate terminal box (⇨🕮 A50 Cable glands)

For single phase operation			For three-phase operation		
Steinmetz circuit	230V - 277V	50 + 60 Hz	Star circuit	346V - 525V	50 Hz
			Delta circuit	200V - 303V	50 Hz
			Star circuit	380V - 575V	60 HZ
			Delta circuit	220V - 332V	60 HZ

As standard, external fans for sizes 63 - 90 are connected for single phase operation. For sizes 100 and larger, they are connected for three-phase operation.

Type	1~, 50 Hz				3~, 50 Hz △ / Y					
	U_N [V]	I_N [mA]	P_N [W]	n_N [min^{-1}]	U_N△[V]	I_N△[mA]	U_N Y [V]	I_N Y [mA]	P_N [W]	n_N [min^{-1}]
63	230 - 277	88 - 106	19 - 27	2830 - 2875	200 - 303	60 - 116	346 - 525	35 - 66	16 - 28	2630 - 2900
71	230 - 277	90 - 104	20 - 27	2768 - 2866	200 - 303	62 - 112	346 - 525	36 - 64	15 - 31	2680 - 2875
80	230 - 277	99 - 107	22 - 29	2625 - 2780	200 - 303	66 - 109	346 - 525	38 - 62	18 - 31	2582 - 2818
90	220 - 277	215 - 293	41 - 65	2885 - 2923	200 - 303	180 - 379	346 - 525	104 - 219	36 - 91	2860 - 2931
100	220 - 277	223 - 282	46 - 66	2820 - 2888	200 - 303	182 - 372	346 - 525	105 - 215	43 - 91	2800 - 2906
112	220 - 277	252 - 284	54 - 71	2705 - 2845	200 - 303	191 - 353	346 - 525	110 - 204	50 - 97	2730 - 2880
132	230 - 277	220 - 281	41 - 61	1450 - 1460	200 - 303	189 - 376	346 - 525	109 - 209	31 - 81	1435 - 1466
160	230 - 277	351 - 446	64 - 93	1438 - 1460	200 - 303	318 - 622	346 - 525	184 - 346	51 - 118	1415 - 1456
180	230 - 277	351 - 446	64 - 93	1438 - 1460	200 - 303	318 - 622	346 - 525	184 - 346	51 - 118	1415 - 1456
200	230 - 277	351 - 446	64 - 93	1438 - 1460	200 - 303	318 - 622	346 - 525	184 - 346	51 - 118	1415 - 1456

External fans cool the motor regardless of the motor speed and with appropriate circuitry also when the motor is switched off.

Circuit diagrams for external fans

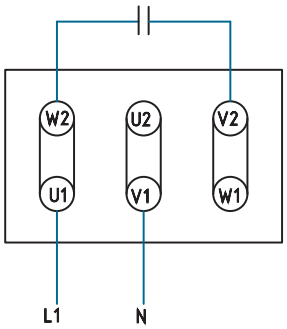

Single phase operation
Steinmetz circuit
230V - 277V 50 + 60Hz

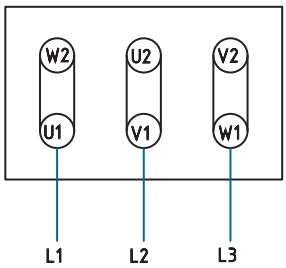

Three-phase operation
Delta circuit △
200V - 303V 50Hz
220V - 332V 60Hz

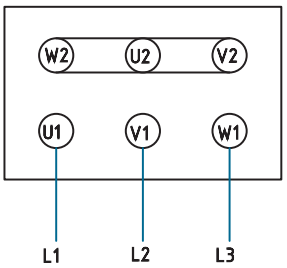

Three-phase operation
Star circuit **Y**
346V - 525V 50Hz
380V - 575V 60Hz

Encoders

Magnet-Incremental encoder (MG)

A competitively priced, robust, and flexible incremental encoder system will be offered for NORD engines with a 63 to 180 motor frame. The system operates based on a contactless, magnetic measuring principle and does not require its own storage. This makes it very vibration-resistant and insensitive to shocks that affect the power unit. The installation of the sensor occurs on the B-side of the engine. The magnet sensor is attached to the wave and the evaluation sensor attached to the fan cover using a threaded hole. The system‘s alignment tolerates +/- 1mm in all 3 axles. A special design of the magnetic system also enables its implementation in the vicinity of electric brakes. The sensor delivers 2 output channels (channels A and B) that give off the impulse edges, offset by 90°. This enables rotational direction recognition and impulse quadrupling.

As its lowest resolution, NORD offers an encoder with 1 impulse/revolution (1ppr), which outputs a „1“ and then a „0“ per 180° on the engine shaft. This enables cost-effective monitoring that does not require a fast PLC or meter input. For the version with 512 ppr, it must be taken into account that the absolute accuracy is lower than for a conventional encoder system due to assembly tolerances. The impulse times can vary slightly, as the absolute accuracy is typically around 200ppr.

Wire allocation / Color	Function allocation
red	Voltage supply (+)
black	Voltage supply (-)
brown	Channel A
orange	Channel B

Technical Data	Value Range	
Standard resolutions	1 ppr, 32 ppr, 512 ppr (Pulse/revolution)	
Output signals (Line A and B)	HTL level push-pull / max. 40 mA / short circuit protected	
Supply voltage and power consumption without load	10-30 VDC / < 30 mA	
EMV and ESD- strength	EN 55022: Class B (30…1000 MHz) EN 61000-4-2: Contact 4 kV/Air 8 kV EN 61000-4-3: 30 V/m	EN 61000-4-4, EN 61000-4-5: 1 kV EN 61000-4-6: 10 Vemk EN 61000-4-8: 30 A/m
Temperature range	-20 ... 80°C	
Speed range	0 ... 5000 min^{-1}	
Protection class	IP68	
Length of the connecting line and sheath cross-section	1000 mm / Ø 4,9 mm	
Number of wires and cross-section	4x Ø 0,34 mm² (AWG22)	
Engine dimensional change	max. 20 mm longer	

Construction of the magnetic encoder system

The magnetic encoder system‘s assembly process is kept very simple using an automatic alignment function. The alignment occurs automatically when the screws are tightened on the fan cover and the sensor casing.

Only the cams still grind down on the counter plate during the subsequent test run. The connection line will subsequently be fixed to the fan cover will be fed to the terminal box.

⚠ Motor extension at magnetic encoder⇨📖 C39.

Sectional drawing/line length

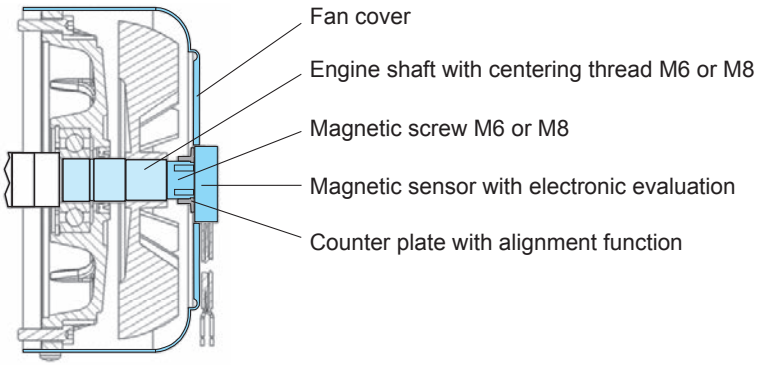

Type code	Options
MG = Magnet-Incremental encoder 01 = 1 impulse 20 = 32 impulse 50 = 512 impulse O = loose cable ends (Standard)	• MG ... **M** 4-pole, A-encoded M12 flange plug on the terminal box • MG ... **N** 4-pole, A-encoded M12 coupling plug • MG ... **V** 4-pole line connector for line extension
E.g. **MG 50 O** Magnet-Incremental encoder (**MG**) with 512 impulse (**50**) and loose cable ends (**O**)	

Allocation Coupling plug / Line connector	Function allocation
Pin 1 / red	Voltage supply (+)
Pin 2 / brown	Channel A
Pin 3 / orange	Channel B
Pin 4 / black	Voltage supply (-)

M12 plug allocation	Function allocation
Pin 1 /brown	Voltage supply (+)
Pin 2 / white	Channel A
Pin 3 / blue	Channel B
Pin 4 / black	Voltage supply (-)

Sensor bearing (SL)

Upon request, for NORD engines with the frame size 63 to 132, a design with sensor bearing (SB) can also be delivered. When doing so, the engine-side floating bearing will be exchanged for a ball bearing with a magnetic ring on the inner ring and evaluation electronics (hall sensor) on the outer ring. The connecting line runs inside the engine through the changing room into the terminal box. The sensor bearing generates 2 rectangular signals phase-shifted by 90°, which enable the determination of the rotational direction. The number of impulses 32, 48, 64 or 80 is dependent on the number of poles on the magnetic ring. The pulse number rises along with the bearing size.
Due to the small amount of space on the sensor bearing, the electronics do not have any short-circuit proof driver outputs. The sensor bearing also possesses open collector-outputs, which require external Pull-up resistors.

The rotational direction orientation also changes during the evaluation of A+B lines, depending on the floating bearing position in the engine (A- or B-side). NORD recommends the implementation of an additional protective circuit which would be housed in the terminal box.

Wire allocation / Wire color	Function allocation
red	Voltage supply (+)
black	Voltage supply (-)
white	Channel A
blue	Channel B

The combination sensor bearing with brake must be ckecked in each individual case on its viability.

Technical Data	Value Range
Resolution depends on the warehouse size	32ppr / 48ppr / 64ppr / 80ppr
Output signals (Line A and B)	Open collector level / max. 20mA **Not short circuit-protected; Additional protective circuit available**
Supply voltage and power consumption without load	10-24VDC / < 15mA
EMV and ESD strength	EN 61000-4-2: Contact 4 kV/Air 8 kV EN 61000-4-3: 10V/m EN 61000-4-8: 30A/m
Temperature range	-20 ... 100°C
Speed range	0 ... 5000 min^{-1}
Protection class	IP68
Connecting line length	internally conducted to the terminal box
Number of wires and cross-section	4 x Ø 0,14 mm² (AWG26)

Options

- Protective circuit integrated in the terminal box
- 4-pole, A-encoded M12 flange plug on the terminal box

M12 plug allocation	Function allocation
Pin 1 /brown	Voltage supply (+)
Pin 2 / white	Channel A
Pin 3 / blue	Channel B
Pin 4 / black	Voltage supply (-)

Encoders

Incremental encoder (IG)

Modern drive applications often require a speed feedback. Incremental encoders, which convert the rotary movement into electrical signals are usually used for this. These signals are read and processed by frequency inverters or other control devices.
Incremental encoders function according to the photoelectric principle by scanning a disc with line divisions.
The integrated electronics convert the measurement signals into a digital square wave signal for TTL or HTL logic. Types with different resolutions or numbers of lines are available. The standard encoder produces 4096 pulses per rotation.

The following requirements can be implemented with NORD frequency inverters:

- Speed control with wide range of adjustment
- High speed precision, independent of the load
- Synchronous control
- Positioning control
- Standstill torques
- High overload reserves

Technical Data		Type / Puls number		
		IG1 / 1024 IG2 / 2048 IG4 / 4096	IG11 / 1024 IG21 / 2048 IG41 / 4096	IG12 / 1024 IG22 / 2048 IG42 / 4096
Interface		TTL / RS 422	TTL / RS 422	HTL push-pull
Operating voltage $+U_B$	[V]	5 (±5%)	10...30	10...30
Max. output frequency	[kHz]	300		
Max operating speed	[min^{-1}]	6000		
Ambient temperature	[°C]	- 40...+70		
Protection class		IP66		
Max. current consumption	[mA]	90	90	150

Connection assignment for rotary encoders

PIN	Colour	Signal	Flange socket assignment
1	pink	B\	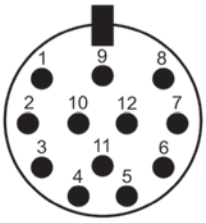 The shield lies on the housing
2	blue	+ U_B Sensor	
3	red	0	
4	black	0\	
5	brown	A	
6	green	A\	
7	violet	Vacant	
8	grey	B	
9		Vacant	
10	white / green	0 V	
11	white	0 V Sensor	
12	brown / green	U_B	

Attachment of incremental encoders

Rotary encoders can be attached to motors of sizes 63 to 200.

The motors may be either self ventilated or externally ventilated, and with or without brakes. The NORD hollow shaft push-on rotary encoder is mounted directly on the B side end of the motor shaft, where it is protected by the fan cover. This ensures a secure, torsion-free coupling of the encoder.

Electrical connection is by means of a pre-assembled cable (standard: 1.5 m long with open cable ends. Other lengths or versions with plugs are possible).

Cable	Bending radius (standard)
Fixed attachment	26 mm
Flexible attachment	78 mm

Inremental encoders without plugs

⚠ The end of the cable is sealed with the ESD shield. This protects the cable against electrostatic voltages. The connection must be made in an ESDF compliant manner!

IG1K, IG2K or IG4K

Alternatively, connection in a separate terminal box is possible with the options IG1K, IG2K or IG4K (extra charge) ⇨📖 A50 Cable glands M20x1,5.

⚠ Encoders with a protective cover (RD) are only possible with the fitting of an external fan (F)!

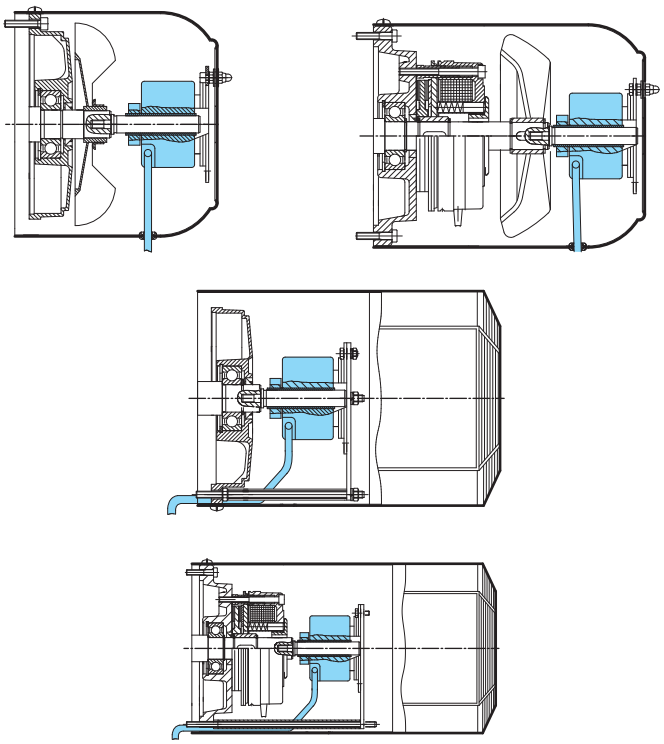

Inremental encoder with 8-pin plug (IG.P)

PIN	Color	Signał	Configuration of the encoder connections
1	white	0V	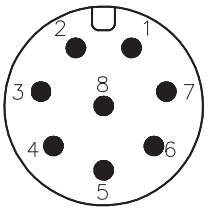
2	brown	+ U_B	
3	green	A	
4	black	A\	
5	gray	B\	
6	pink	A\	
7	blue	0	
8	red	0\	

The selection of the rotary encoder according to the output logic is determined by the interface of the evaluation electronics. The following conditions apply for NORDAC frequency inverters:

NORDAC frequency inverter series	Incremental encoder logic
SK700E with SK XU1-ENC or SK XU1-POS	TTL with 5V supply or 10 – 30V supply
SK520E, SK530E, SK535E	* TTL with 10 – 30V supply
SK200E, SK205E, SK210E, SK215E, SK220E, SK225E, SK230E, SK235E	HTL with 10 – 30V supply

Further details can be found in the frequency inverter operating instructions, e.g. BU 0500E.

An external electronic module to convert HTL signals to TTL signals (connection of encoder to 700E with very long cables) is available from NORD.

* HTL-Signal level is also possible, up to amax. Frequency of 16 kHz

Encoders

Absolute encoder (AG)

Absolute encoders are transponders for rotary motion, which output absolute position information within the range of a single revolution of the motor (360°, single turn) or in addition, the number of revolutions related to a zero point (multiturn).

Typical values are 8192 (13Bit) steps per revolution and with multiturn encoders, additionally 4096 (12Bit) differentiation of the number of revolutions.
Single turn encoders are mounted on the output side of the system (typically: rotating platforms), while **multiturn encoders** can be mounted on the system drive unit or directly on the motor. With an absolute encoder, measurement of the number of revolutions is carried out either entirely electromagnetically or mechanically, by reducing the speed by means of small gear stages with additional barcode discs.

Advantages for positioning applications in comparison with incremental encoders

The position information is always up-to-date, even in case of position changes with the voltage switched off or in case of lost or corrupt pulses.

Absolute encoders cannot be used to control speed (with NORDAC inverters). However, combined encoders with absolute and additional incremental encoder signals are available.
Absolute encoders with different data protocols are available, e.g. SSI, CANopen or Profibus. Selection depends on the electronics used for evaluation!

Overview of multiturn absolute encoders

(only certain CANopen rotary encoders are approved for use with the SK500E and SK200E series)

Encoder type	Multiturn Absolute encoder with incremental signals	Multiturn Absolute encoder	Multiturn Absolute encoder without bus cover	Multiturn Absolute encoder with incremental signals	Multiturn Absolute encoder with incremental signals	Multiturn Absolute encoder with incremental signals
for inverter type	SK 700E + POS	SK 2xxE, SK 53xE	SK 53xE	SK 53xE	SK 2xxE	SK 53xE
Single turn resolution	8192 (13 Bit)	8192 (13 Bit)	8192 (13 Bit)	8192 (13 Bit)	8192 (13 Bit)	8192 (13 Bit)
Multiturn resolution	4096 (12 Bit)	4096 (12 Bit)	4096 (12 Bit)	4096 (12 Bit)	4096 (12 Bit)	65536 (16 Bit)
Interface	SSI Gray Code	CANopen profile DS406 V3.1	CANopen profile DS406 V3.1	CANopen profile DS406 V3.1	CANopen Profil DS406 V3.1	CANopen profile DS406 V3.0
CAN address/ baud rate	-	adjustable	Fixed address 51, baud rate 125K	adjustable	adjustable	adjustable
Bus cover	-	Yes	No	Yes	Yes	Yes
Incremental encoder output	TTL / RS422 2048 Impulse	No	No	TTL / RS422 2048 Impulse	HTL 2048 Impulse	TTL / RS422 2048 Impulse
Power supply	10 – 30 VDC	10 – 30 VDC	10 – 30 VDC	10 – 30 VDC	10 - 30 VDC	10 – 30 VDC
Referencing	SET - Input	via CANopen	via CANopen	via CANopen	via CANopen	via CANopen
Scanning principle	optical / mechanical	optical / mechanical	optical / mechanical	optical / mechanical	optisch / mechanical	optical / magnetic
Shaft version	Hollow shaft D=12	Blind hole D=12	Blind hole D=12	Blind hole D=12	Blind hole D=12	Blind hole D=12
Electrical Connection	Cable end 1.5 m	Terminal	Cable end 2.0 m	M12 socket	M12 connector	Terminal IG: M12 connector
Temperature range	-30°C to +75°C	40°C to +80°C	-30°C to +75°C	-40°C to +80°C	-40°C bis +80°C	25°C to +85°C
IP protection class	IP 67	IP 67	IP 67	IP 67	IP 67	IP 66

Resolver (RE)

Resolvers can be fitted to NORD motors. **Please ask!**

Motor plug connectors (MS)

Normal version

Terminal box for 1, plug connector for II (to fan cover), Plug connector possible for I + III

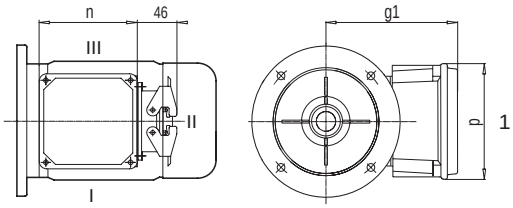

Type	63	71	80	90	100	112	132
g1 / g1 Bre [mm]	140	149	158	163	174	184	204 / 219
n [mm]	114	114	114	114	114	114	122
p [mm]	114	114	114	114	114	114	122

If required, size 63 - 132 three-phase (brake) motors can also be supplied with motor plug connectors (type suffix: **MS**).
The plug connector is mounted on the side of the terminal box. The normal version points towards the fan cover with II Plugs for I or III are possible. Housings with 2-clamp transverse locking are used.

With motor sizes 63 - 112 a pin version type HAN 10 ES is fitted to the motor. The customer must provide a type HAN 10 ES plug socket (manufactured by Harting).
Above motor size 132 the motor has a type HAN C modular pin version.

A fixed assignment of contacts is available for single-speed and switchable pole motors (separate windings and Dahlander pole switching). Contacts for thermistor temperature sensors or temperature monitors and the brake connection voltage are also assigned.

The motor plug connector is supplied without a mating plug and is protected from dirt by means of a protective cover.

Technical data for sizes 63 - 112

Connector: Han 10 ES/Han 10 ESS
Number of contacts: 10
Current: 16 A max.
Voltage: 500 V max.
Cage-clamp terminals

Technical data for sizes 132

Connector: Han C-Modular
Number of contacts: 9
Current: 22 A max.
Voltage: 690 V max.
Crimp connections

Please ask for detailed information!

See circuit diagrams ⇨🕮 A44 - 45

ATEX (RL 94/9 EU) compliant motors

Explosive gas or dust atmospheres occur in various areas of industry and crafts. They are usually caused by mixtures of oxygen in combination with inflammable gases or thrown-up or deposited inflammable dust. Because of this, electrical and mechanical equipment for use in explosion hazard areas are subject to special national and international standards and guidelines.
The term **ATEX** which is often used for explosion protection, come from the initial letters of the title of an older French directive "**AT**mosphères **Ex**plosives" Based on this, in March 1994, the European Parliament adopted the EEC Directive 94/9/EEC to harmonize the legal regulations for devices and protective systems for correct use in explosion-protected areas.

In the design of mechanical and electrical equipment the objective is to prevent ignition or to restrict its effects. For this, the explosion protection regulations come into effect.

Gas explosion protection for **Zone 1** and **Zone 2**
- Increased safety Ex e II
- pressure resistant encapsulation, increased safety terminal box Ex de IIC

Dust explosion protection
- **Zone 21** and **Zone 22**

Zone categorisation for inflammable gases and aerosols

Zone 1:
The area in which an explosive atmosphere consisting of air and inflammable gases, vapours or aerosols can **occasionally** form during normal operation.

Zone 2:
The area in which an explosive atmosphere of air and inflammable gases, vapours or aerosols **normally does not occur**, or only occurs **for a short time**.

Categorisation of zones for inflammable dust

Zone 21:
The area in which an explosive atmosphere consisting of a cloud of air and inflammable dust can **occasionally** form during normal operation.

Zone 22:
The area in which an explosive atmosphere in the form of a cloud of air and inflammable dust **normally does not occur**, or only occurs **for a short time**.

Increased safety (Ex e)

For motors of device categories 2G and 3G, i.e. the Ex-Zones 1 and 2, sparking and impermissible temperatures are prevented as per ignition protection type "**e**" (Increased Safety). This is achieved by the design of the fans and fan cowlings, the bearings and terminal boxes. Characteristic for this is e.g. the low surface resistance of plastic fans (depending on the circumferential speed of the fan). There are large air gaps between the rotating parts and large air gaps and leakage tracks in terminal boxes.
For the selection of the model it should be noted that in comparison with the corresponding standard motor, drive units with ignition protection type "**e**" often have a reduced output power. These motors have windings which are different to comparable motors for non-explosive areas. This results in a real reduction in power. These motors are usually used up to **Temperature Class T3**.

Pressure resistant encapsulation (Ex d and Ex de)

The ignition protection class "**de**" is based on a different protection concept. The construction withstands explosions in the interior of the motor and prevents the explosion from from spreading to the surrounding atmosphere. These motors have increased wall thicknesses to protect them against the excess pressure which results from ignition. Among other things, these systems also require fans with protection class "e".
The drive units provide the same rated power as motors which are not explosion protected and can be used in the same manner as geared motors with protection class "**e**" in Zone 1 and 2. These motors are often used in cases where inverter operation, brakes, encoders and/or a very high level of safety are required. Typically, pressure resistant encapsulated motors supplied by NORD fulfil the requirements for **Explosion Group IIC** and **Temperature Class T4**.

For further information, please refer to the ATEX catalogues
- G1001 Explosion protected drive units
  Category 2G, Zone 1, gas
- G1022 Explosion protected drive units
  Category 3D, Zone 22, dust

These catalogues can also be found under www.nord.com (Documentation/Catalogues)

Intelligent Drivesystems, Worldwide Services
ATEX
konform
II 2G
DE GB FR
G1001
Explosionsgeschützte Antriebe, Kategorie 2G, Zone 1, Gas
Explosion protected drive units, category 2G, zone 1, gas
Entrainements antidéflagrants, catégorie 2G, zone 1, gaz
NORD
DRIVESYSTEMS

Intelligent Drivesystems, Worldwide Services
ATEX
konform
DE GB FR
G1022
Explosionsgeschützte Antriebe, Kategorie 3D, Zone 22, Staub
Explosion protected drive units, category 3D, zone 22, dust
Entrainements antidéflagrants, catégorie 3D, zone 22, poussière
NORD
DRIVESYSTEMS

Motor inquiry form

Motor Inquiry

NORD DRIVESYSTEMS
Rudolf-Diesel-Straße 1
D-22941 Bargteheide
Fon +49(0) 4532/401-0
Fax +49(0)4532/401-254
E-Mail info@nord.com
www.nord.com

Company			
Street			
Town		Zip code	
Contact			
Fon		Customer No.	
Fax		Application	
E-Mail		Project	

Quantity		Type	

Motor Parameters

Mount	Enclosure
◯ IEC B3	◯ IP 54
◯ IEC B5	◯ IP 55
◯ IEC B14	◯ IP 65
◯ NEMA C-Face	◯ IP 66
◯ NEMA Foot	◯ IP 67
◯ Integral Flange ø ____ Pos. ____	◯ IP 68

Power	Coil
Power ____ [kW]	◯ Standard
Efficiency	◯ UL
◯ IE1	◯ CSA
◯ IE2	◯ CUS
◯ IE3	◯ CCC

Motor Parameters

Frame	Size	Poles
◯ 63	◯ S	◯ 4
◯ 71	◯ SH	◯ 2
◯ 80	◯ M	◯ 6
◯ 90	◯ MA	◯ 4-2
◯ 100	◯ MH	◯ other ____
◯ 112	◯ MX	
◯ 132	◯ L	Operation Mode
◯ 160	◯ LA	◯ S1
◯ 180	◯ LB	◯ S2 ____ min
◯ 200	◯ AH	◯ S3 ____ %
◯ 225	◯ LH	◯ S4 ____ %
◯ 250	◯ LX	◯ S6 ____ %
◯ 280	◯ XH	◯ S9
◯ 315	◯ RH	
	Isulation Class	
	◯ F ◯ H	

Motor Inquiry

Motor Parameters

Voltage and Frequency

- ◯ 230 / 400 V 50 Hz
- ◯ 400 / 690 V 50 Hz
- ◯ 115 / 230 V 60 Hz
- ◯ 220 / 380 V 60 Hz
- ◯ 332 / 575 V 60 Hz
- ◯ 230 / 460 V 60 Hz
- ◯ Other [ ] [V] [ ] [Hz]

Frequency characteristic

- ◯ 50 Hz
- ◯ 87 Hz
- ◯ 100 Hz

Min. Freq. [ ] [Hz]

Max. Freq. [ ] [Hz]

ATEX

- ◯ No ATEX
- ◯ ATEX (Please use sepperate Form)

Mechanical Options

- ◯ With Fan & Cover
- ◯ RD
- ◯ RDD
- ◯ RDT
- ◯ OL
- ◯ OL/H

Electrical Options

- ◯ Normal Motor (3~ Motor)
- ◯ ECR (1~ Motor)
- ◯ EAR1 (1~ Motor)
- ◯ EHB1 (1~ Motor)
- ◯ EST (1~ Motor - Steinmetz)

- ◯ TW
- ◯ TF Temp [ ] [°C]
- ◯ 2TF Temp [ ] [°C]

☐ SH ◯ 110 V ◯ 230 V ◯ 500 V

☐ ERD

Mechanical Options

- ◯ No special Isulation
- ◯ FEU
- ◯ TRO
- ◯ EP

- ☐ KB
- ☐ KKV
- ☐ F
- ☐ Z
- ☐ EKK
- ☐ MS

Motor Parameters

Mechanical Options

- ◯ No Handwheel or 2nd Shaft Extension
- ◯ HR
- ◯ WE ø [ ] x [ ] [mm]

Mechanical Options

- ◯ No RLS
- ◯ RLS CW
- ◯ RLS CCW

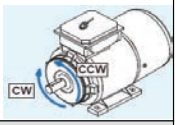

Encoder

☐ IG ◯ TTL

◯ 5 V ◯ HTL

◯ 10 - 30 V ◯ Sin / Cos

Resolution

◯ 512 ◯ 1024

◯ 2048 ◯ 4096

☐ AG

Resolution

Turns [ ] Step [ ]

Bussystems

◯ SSI ◯ CANopen

◯ ProfiBus ◯ other [ ]

☐ additional incrementel signal (see IG)

Brake Parameters

◯ No-Brake

◯ Normal Brake [ ] [Nm]

◯ Double Brake 2x [ ] [Nm]

◯ Holding Brake/Emergency Brake ◯ Working Brake

- ◯ No Hand Release
- ◯ HL
- ◯ FHL
- ◯ SR
- ◯ RG
- ◯ GP [ ]
- ◯ G [ ] V

- ◯ NRB 1
- ◯ NRB 2
- ☐ IP 66
- ☐ MIK
- ☐ BRB
- ☐ IR

Brake Supply

- ◯ 24 VDC
- ◯ 115 VAC
- ◯ 200 VAC
- ◯ 230 VAC
- ◯ 400 VAC
- ◯ 460 VAC
- ◯ Other [ ]

Remarks

Motor enquiry forms are available www.driveefficiency101.com

Circuit diagrams

Three-phase motor

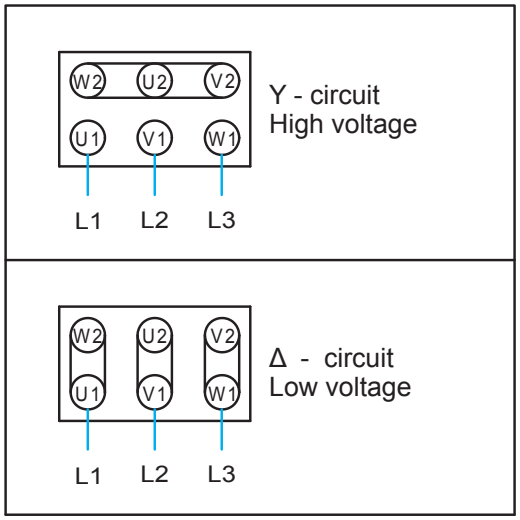

Three-phase motor NEMA (230 / 460V)

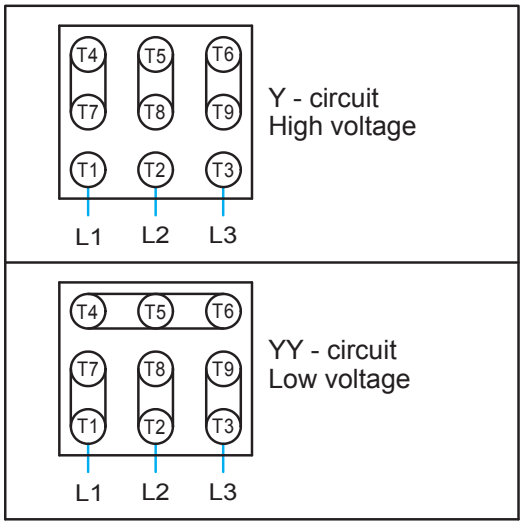

with motor plug connector (MS)

400 V - Star circuit Y

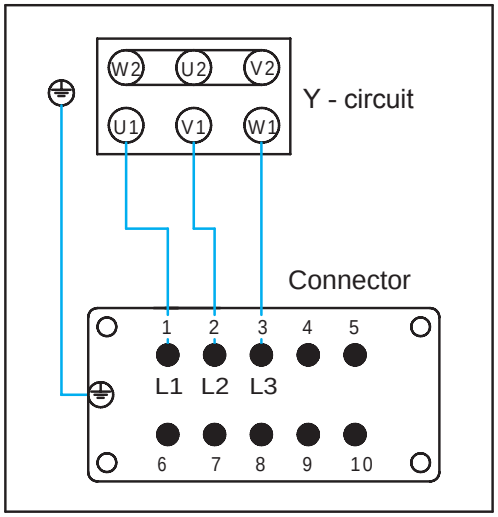

400 V - Delta circuit Δ

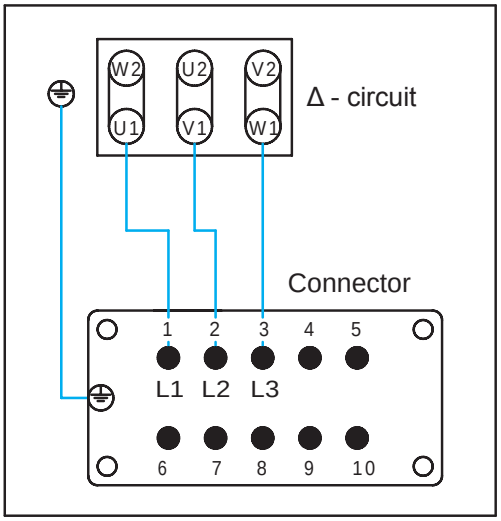

Three-phase motor, switchable pole Dahlander pole switching

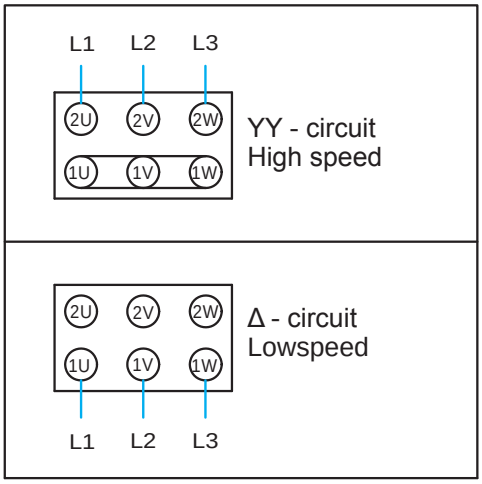

Three-phase motor, switchable pole separated windings

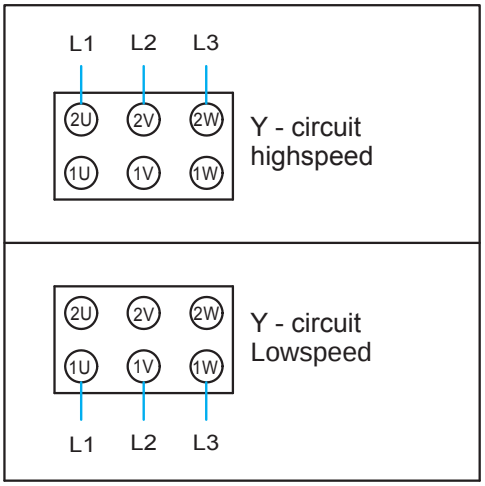

Single phase motor EHB1

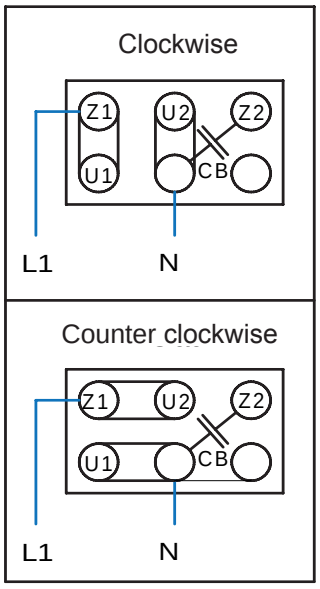

Single phase motor EAR1

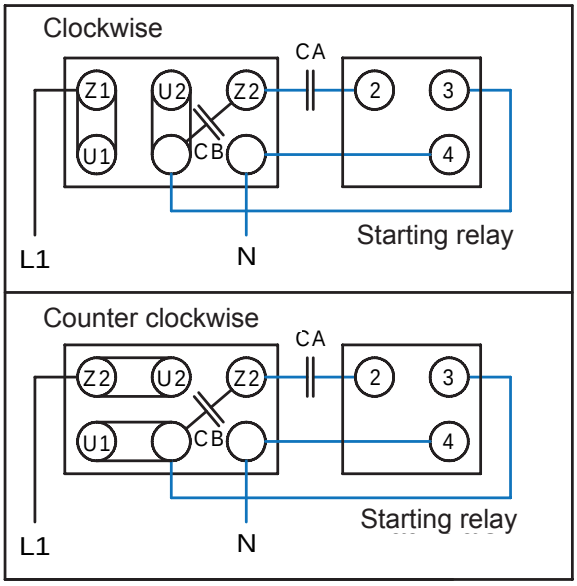

Single phase motor EST (Steinmetz circuit)

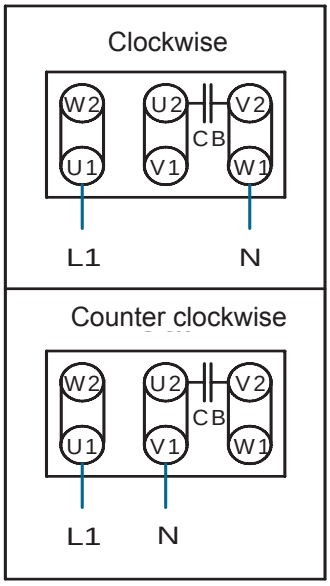

Single-phase motor ECR NEMA (115 / 230V) ECR

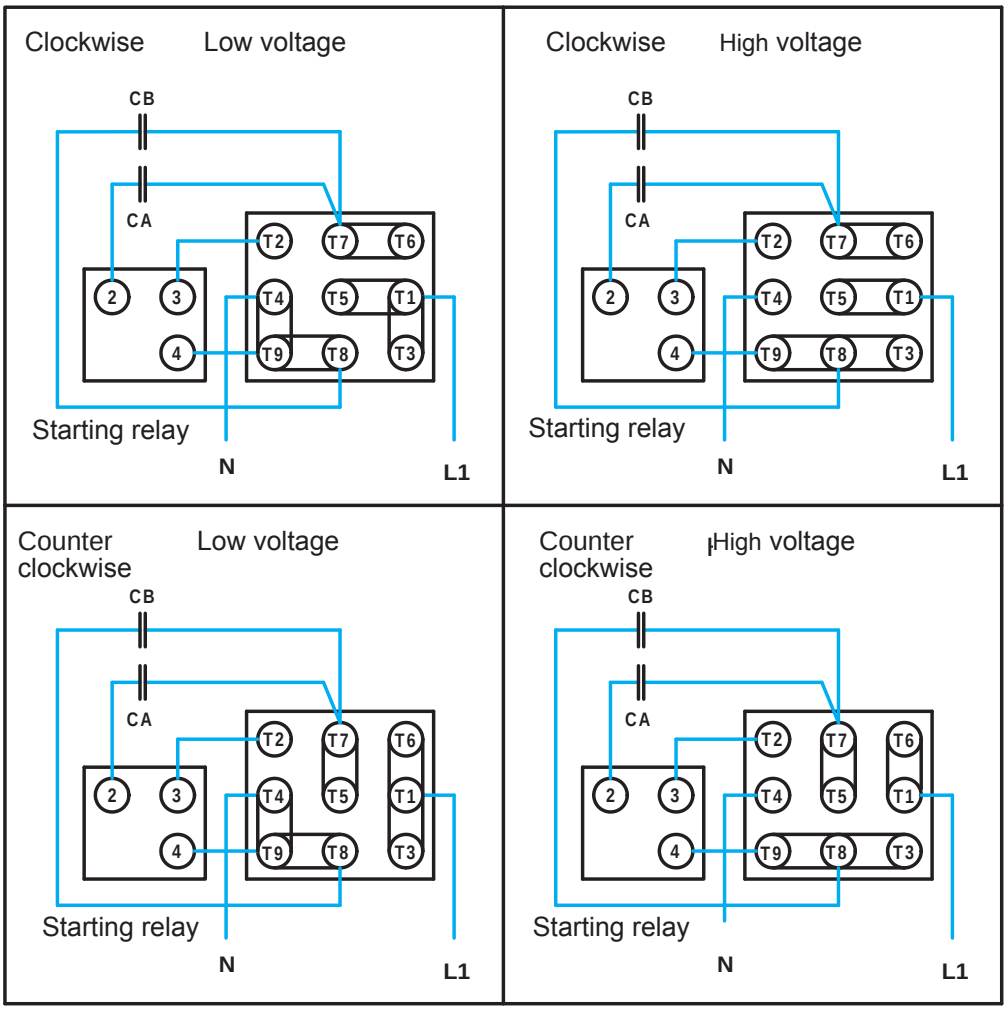

Efficiency

The following table shows the specifications for the efficiency, corresponding to the efficiency class and dependent on the motor power

- for various national efficiency classifications
- for enclosed 4-pole motors

A direct comparison of efficiencies is not possible as the measurement methods differ.

		CEMEP		IEC	CEMEP		IEC	Australia New Zealand	IEC	China		
50Hz		**EFF2**		**IE1**	**EFF1**		**IE2**	AS/NZS 1359.5:2004 Level 1B	**IE3**	GB 18613-2006 Level 3	GB 18613-2006 Level 2	GB 18613-2006 Level 1
[kW]	HP	η setpoint [%]	η min [%]	η setpoint [%]	η setpoint [%]	η min [%]	η setpoint [%]	η setpoint [%]	η setpoint [%]	η setpoint [%]	η setpoint [%]	η setpoint [%]
0,55	-	-	-	-	-	-	-	-	-	71	80,7	-
0,73	-	-	-	-	-	-	-	82,2	-	-	-	-
0,76	1	-	-	72,1	-	-	79,6	82,2	82,5	73	82,3	-
1,1	1,5	76,2	72,6	75	83,8	81,4	81,4	83,8	84,1	76,2	83,8	-
1,5	2	78,5	75,3	77,2	85	82,8	82,8	85	85,3	78,5	85	-
2,2	3	81	78,2	79,7	86,4	84,4	84,3	86,4	86,7	81	86,5	-
3	4	82,6	80,0	81,5	87,4	85,5	85,5	87,4	87,7	82,6	87,4	-
3,7	5	-	-	-	-	-	-	-	-	-	-	-
4	-	84,2	81,8	83,1	88,3	86,5	86,6	88,3	88,6	84,2	88,3	89,9
4,5	6	-	-	-	-	-	-	-	-	-	-	-
5,5	7,5	85,7	83,6	84,7	89,2	87,6	87,7	89,2	89,6	85,7	89,2	90,7
7,5	10	87	85,1	86	90,1	88,6	88,7	90,1	90,4	87	90,1	91,5
9,2	12,5	-	-	-	-	-	-	-	-	-	-	-
11	15	88,4	86,7	87,6	91	89,7	89,8	91	91,4	88,4	91	92,2
15	20	89,4	87,8	88,7	91,8	90,6	90,6	91,8	92,1	89,4	91,8	92,9
18,5	25	90	88,5	89,3	92,2	91,0	91,2	92,2	92,6	90	92,2	93,3
22	30	90,5	89,1	89,9	92,6	91,5	91,6	92,6	93	90,5	92,6	93,6
30	40	91,4	90,1	90,7	93,2	92,2	92,3	93,2	93,6	91,4	93,2	94,2

The actual efficiency of the motor is stamped on the motor type plate. For wide voltage ranges, the efficiency which is stamped is that for the most unfavourable operating point. At the nominal voltage, the efficiency is then better than that which is stamped on the type plate.

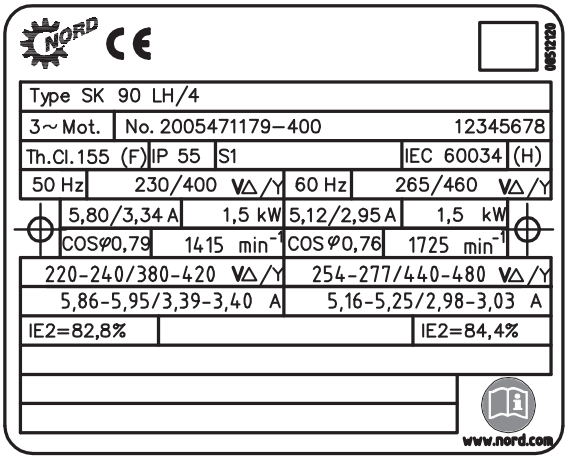

Relationship of efficiency and mains load

For efficient utilisation of a motor it is advisable to operate it close to its nominal power.
Depending on the motor power, operation under partial load can be inefficient - especially with smaller motors.

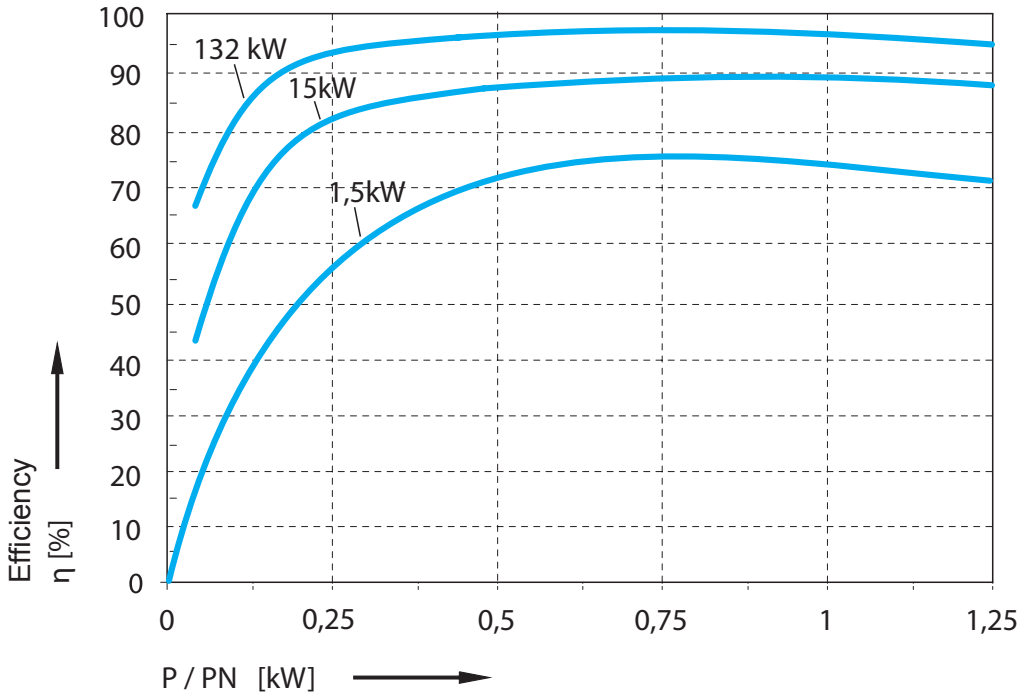

Relationship between efficiency and FI frequency range

With operation of the motor on a frequency inverter, the efficiency of the motor increases with the frequency with which it is operated.
The following diagram shows this relationship on the basis of a 90SH/4 motor. For geared motors it should be noted that higher input speeds result in increased gear losses.

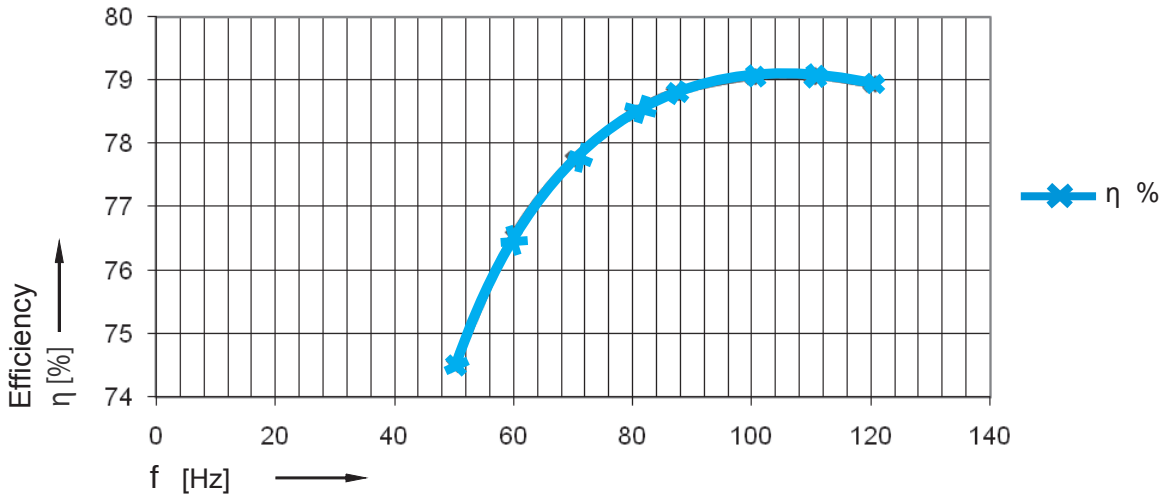

Mains connection / Rated voltages / Voltage fluctuations

Voltage tolerance as per DIN IEC 60038

DIN IEC 60038 recommends tha the voltages at the handover points are not allowed to deviate by more than ± 10%from the new standard voltages.

Previous mains voltages	Current mains voltages
220 V, 380 V, 660 V	230 V, 400 V, 690 V +6/-10%
240 V, 415 V	230 V, 400 V +10/-6%

Permissible voltage and frequency deviations as per DIN EN 60034-1

AC machines must operate reliably at their rated voltage or within their rated voltage range ± 5% and within their rated frequency range ± 2%. Their heat-up must not exceed the limiting values for their heat class (F) by more than 10K. The voltage or voltage range stamped on the motor type plate are the rated voltages or rated voltage ranges to which the voltage tolerance relates.

Permissible voltage deviation as per NEMA CSA

According to NEMA and CSA, the permissible voltage deviation is ± 10% from the stamped rated voltage or the stamped rated voltage range.

According to ANSI C84.1, in North America, a differentiation is made between nominal system voltages (Nominal System Voltage - 120V, 208V, 240V, 480V, 600V) and the corresponding utilization voltages (Nominal Utilization Voltage – 115V, 200V, 230V, 460V, 575V). According to this, consumers must be stamped with the nominal utilisation voltage. Stamping of electric motors with 120V, 208V, 240V, 480V oder 600V does not comply with the standard and is not usual in North America.

System voltage	Device/consumer voltage
600 V	575 V
480 V	460 V
240 V	230 V
208 V	200 V

Rated voltages of NORD motors

4-pole NORD standard motors and IE2 motors for 50Hz are rated for the
- voltage ranges 220-240 / 380-420V and
- voltage ranges 380-420 / 660-725V

As per DIN EN 60 034, they operate reliably in continuous operation with ± 5% of these voltage ranges. Therefore, reliable operation within the recommended range of the standard IEC voltages of 230V, 400V and 690V +/-10% is ensured.
NORD motors which are compliant with NEMA, CSA (cCSAus) are only stamped with the rated voltage and not with a rated voltage range. Their permissible voltage deviation is ± 10% of the stamped rated voltage.

Voltage and frequency

NORD three-phase motors are wound as follows:
- up to nominal power < 3.0 kW for 230/400V Δ/Y 50Hz
- above a nominal power of 3.0 kW for 400/690V Δ/Y 50Hz

As standard, NORD motors are wound as follows:

No. of poles	Motor type	Nominal voltage		Frequency
4	63 S/4 - 100 L/4 100 LA/4 - 200 LX/4	230/400 V 400/690 V	Δ/Y Δ/Y	50 Hz
2	63 S/2 - 90 L/2 100 L/2 - 132 MA/2	230/400 V 400/690 V	Δ/Y Δ/Y	50 Hz
6	63 S/6 - 112 M/6 132 S/6 - 132 MA/6	230/400 V 400/690 V	Δ/Y Δ/Y	50 Hz
4-2	63 S/4-2 - 160 L/4-2	400 V	Δ/YY	50 Hz
8-2	71 S/8-2 WU - 160 L/8-2 WU	400 V	Y/Y	50 Hz
8-4	71 S/8-4 - 132 M/8-4	400 V	Δ/YY	50 Hz

Operation of 50 Hz motors on 60 Hz mains

Guide values for conversion factors for the listed values

50 Hz	60 Hz	n_N * approx.	P_N	M_N	I_N	M_A/M_N M_K/M_N	I_A/I_N
230V	230V	1,2	1,0	0,83	1,0	0,8	0,8
400V	400V	1,2	1,0	0,83	1,0	0,8	0,8
400V	460V	1,2	1,0	0,83	0,9	1,1	1,1
400V	460V	1,2	1,15	0,96	1,0	1,0	1,0
500V	500V	1,2	1,0	0,83	1,0	0,8	0,8
500V	575V	1,2	1,0	0,83	0,9	1,1	1,1
500V	575V	1,2	1,15	0,96	1,0	1,0	0,9

* The actual speed relationship depends on the type of motor.

NORD motors with special winding are available for other voltages and frequencies.

NORD single-phase motors

EAR1, EHB1

The EAR1, EHB1 series supersedes the EAR, EHB series.

It features:

- increased breakdown torque
- wide voltage range 220-240V (additionally as per EN60034 +/-5%)
- increased reliability

Single-phase motors have only 2 temperature sensors - one each for the main and auxiliary windings.

EST

A low cost solution with Steinmetz circuit for simple demands.

ECR (60Hz)

The ECR series is intended for demanding operation on 60Hz mains with 115V or 230V. The permissible voltage range is 115/230V +/-10% without additional tolerance. If the voltage tolerance is utilised, these motors may be continuously overloaded by 35% (S_F 1.35).

Combination of inverters with single-phase supply and three-phase motors

For lower powers, three-phase motors may be used as an alternative to single-phase motors in single-phase networks which are supplied by inverters with single-phase supplies. NORD can supply frequency inverters up to a power of 2.2 kW for single-phase networks.

Special ambient conditions

Heat class 155 (F)

The windings of NORD motors use Class F insulating materials 155 (F). At cooling temperatures up to 40°C and installation altitudes up to 100 m, the highest permissible temperature increase is 105 K. The highest permissible winding temperature is 155° C.

This table contains guide values which cover the entire range of motors, including those with high thermal utilisation. Somewhat higher values apply for motors with low or moderate thermal utilisation. The values for motors for explosion protection areas also deviate.

	40°C	45°C	50°C	55°C	60°C
1000 m	100%	96%	92%	87%	82%
1500 m	97%	93%	89%	84%	80%
2000 m	94%	90%	86%	82%	77%
2500 m	90%	86%	83%	78%	74%
3000 m	86%	83%	79%	75%	71%
3500 m	83%	80%	76%	72%	68%
4000 m	80%	77%	74%	70%	66%

For Motors with extended temperature range (T_{amb} -20 ... 45°C) is as follows table:

	45°C	50°C	55°C	60°C	65°C
1000 m	100%	96%	91%	85%	79%
1500 m	97%	93%	88%	82%	77%
2000 m	94%	90%	84%	79%	74%
2500 m	90%	85%	81%	76%	71%
3000 m	86%	82%	78%	74%	69%
3500 m	83%	79%	75%	71%	67%
4000 m	80%	77%	73%	69%	65%

Heat class 180 (H)

The 4-pole NORD Standard/IE1 motors are available in a modified variant for ambient temperatures up to 60 °C. The windings have insulation class 180 (H), and temperature-critical components are replaced with suitable ones. For planning, you can refer to the values on pages C2/C3.

⚠ **Not all options are possible. Get in touch with us!**

- **Ambient temperature < -20°C and > 60°C**

For cooling temperatures of < -20°C and > 60°C technical modifications to the motor may be necessary. The type of modification is selected according to the application.

- **Outdoor installation** ⇨📖A51, 52
- **Drive submerged or temporarily flooded**

If motors or geared motors are to be operated temporarily or continuously in a submerged state, they must be selected with regard to the type of application. For this, the information listed below is necessary in order to make an offer. Submerged drives are not the subject of this catalogue, but rather are individually planned and offered.

- Operation in surfaced or submerged state
- Immersion depth
- Medium in which submerged
- Medium is contaminated with abrasive substances (sand etc.)
- Temperature of the medium in which submerged
- Required cable length
- Application requires organic oil or organic paint
- Operating hours per year
- Direct mounting of the motor to the gear unit is allowed (preferred)

Thermal motor protection

A good selection of the motor protects it against overheating due to the application or ambient conditions. Factors which may cause the motor to overheat are e.g. high ambient temperatures, restricted flow of cooling air and low motor speeds as a result of inverter operation.
NORD can supply two heat protection components for an extra charge
- **TW** = Bimetal temperature sensor
- **TF** = Thermistor temperature sensor

These are used to directly monitor the temperature of the windings with full utilisation of the motor power.

Three (one in each line) series-connected temperature sensors or thermistors are located at the hottest parts of the windings. Their connections are made to 2 terminals in the terminal box.

⚠ For frequency inverter operation, heavy starting, switched operation, high ambient temperatures restricted cooling etc. the use of a temperature sensor or thermistor is urgently recommended.

Thermostat (TW)

(Other common designations: thermal opener, Klixon, bi-metal opener)
The temperature sensor is and encapsulated, miniature bi-metal switch, which is normally designed as an opener.

It must be connected so that the self-holding of the motor circuit breaker is interrupted when the switching temperature is reached. The circuit breaker then triggers and switches the motor off.
The temperature sensor only closes its contacts again after there has been a considerable reduction in temperature.

Triggering temperature: 155° C
Nominal current: 1.6 A at 250 V
Switch version: opener (terminals TB1 + TB2)

Also available as 2 x **TW** for warning and shut-down!

Temperature sensor (TF)

(Other common designations: Thermistor, thermistor temperature sensor, PTC thermistor)
The resistance of the temperature sensor increases suddenly by almost 10 x when the nominal triggering temperature is reached.

The thermistor temperature sensor can only fulfil its protective function if it is connected to a triggering device!

A triggering device evaluates the increase in resistance and switches the drive unit off.

Triggering temperature: 155° C
Max. voltage 30 V
Terminals TP1 + TP2

Also available as 2 **x TF** for warning and shut-down.
E.g.: 130°C = **Warning** , 155°C = **Shut-down**

NORD Three-phase motors

Standard NORD three-phase motors are self-cooled (with fan)
– Cooling type IC411 as per EN 60034-6

Overview of cooling types:

Designation	English abbreviation
IC410 without fan	TENV
IC411 Self-ventilated	TEFC
IC416 Externally ventilated	TEBC

For installation with restricted air supply, the following minimum distances must be complied with:
Length of motor + protective cover (LS) minus length of motor (L)
⇨ 🕮 C24

For foot-mounted motors (version IM B3) **size 63** the feet are cast onto the housing. In this case, there is only one possible location for the 2nd terminal box (opposite to the feet). (⇨ 🕮 C24 and above).

Please ask in case of series requirement for terminal box position 1 or 3.

With **size 71 - 180** the feet are screwed on. Here, the terminal box location 2 is the standard version, however locations 1 or 3 are possible.

⚠ According to the version, if possible the cable gland into the terminal box should enter from below!

Vibration level A as per DIN EN 60034-14

NORD three-phase motors are made to the vibration level A.

Cable glands

Standard motor	Brake motor
Type 63 - 200	**Type** 63 - 132
Brake motor	
Type 160 - 200	

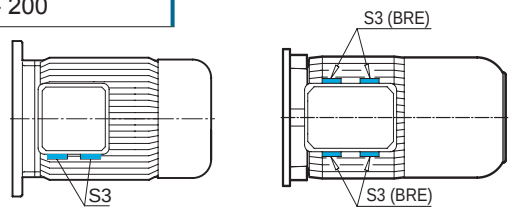

Type	S3	S3 (BRE)
63	M20 x 1,5	M20 x 1,5
71	M20 x 1,5	M20 x 1,5
80	M25 x 1,5	M25 x 1,5
90	M25 x 1,5	M25 x 1,5
100	M32 x 1,5	M32 x 1,5
112	M32 x 1,5	M32 x 1,5
132	M32 x 1,5	M32 x 1,5
160	M40 x 1,5	M40 x 1,5
180	M40 x 1,5	M40 x 1,5
200	M40 x 1,5	M40 x 1,5

Permissible radial and axial forces for IEC / NEMA motors

The listed values apply for a calculated bearing life of L_h = 20,000 hours, for 4-pole motors in 50Hz operation.

F_R = permissible radial force with $F_A = 0$
F_A = permissible axial force with $F_R = 0$

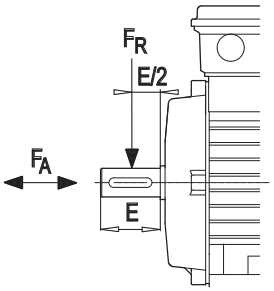

Permissible radial and axial forces

Type	F_R [N]	F_A [N]
63	530	480
71	530	480
80	860	760
90	910	810
100	1300	1100
112	1950	1640
132	2790	2360
160	3500	3000
180 .X	3500	3000
180	5500	4000
200	5500	4000

⚠ These values do not apply to the 2nd shaft end.
Pleas ask about the power which can be transferred and the permissible radial force!

⚠ Motors which are directly mounted on the housing are subjected to radial and axial forces from the 1st gear stage and therefore may be equipped with reinforced bearings.

Bearings and shaft sealing

NORD motors have lubricated-for-life roller bearings. The B side bearing is a fixed bearing.
Greased shaft sealing rings without springs are used on the A and B side.
Oil-tight motors with various flanges are available on request for direct mounting on the gear unit (⇨📖 C42).

Replacement of roller bearings: see operating and maintenance manual B1091.

When option AS66-Outdoor installation is ordered then special sealed ball-bearings (2RSR) are fitted.

Type	A bearing	B bearing (fixed bearing)
63	6202.2Z	6202.2Z
71	6202.2Z	6202.2Z
80	6204.2Z	6204.2Z
90	6205.2Z	6205.2Z
100	6206.2Z	6206.2Z
112	6306.2Z.C3	6306.2Z.C3
132	6308.2Z.C3	6308.2Z.C3
160	6309.2Z.C3	6309.2Z.C3
180 .X	6309.2Z.C3	6309.2Z.C3
180	6312.2Z.C3	6311.2Z.C3
200	6312.2Z.C3	6311.2Z.C3

Noise emission

- **Sound pressure level and sound power level**

According to DIN EN ISO 3745/44, the noise pressure level LPA is measured in an echo-free room with the test sample idling. The measurement area dimension Ls [dB] is calculated from the dimensions of the test sample. The sound power level LwA is determined by addition of the measurement surface dimension to the noise pressure level. A slightly increased noise level is to be expected with inverter operation due to magnetic hum or whistling. The fan noise increases at higher speeds with frequencies above 50Hz or 60 Hz. External fans are supplied directly from the mains. Their cooling effect and noise emission independ on the speed of the motor.

Sound pressure level measurement area and sound power level with mains operation

Tolerance ± 3db(A)			Self-cooled				with external fan			
			50Hz 1500/min		60Hz 1800/min		50Hz		60Hz	
Type			L_{PA}	L_{WA}	L_{PA}	L_{WA}	L_{PA}	L_{WA}	L_{PA}	L_{WA}
IE1	IE2	IE3	[db(A)]				[db(A)]			
63 S/L	-	-	40	52	44	56	47	59	50	62
71 S/L	-	-	45	57	49	57	51	63	53	65
80 S 80 L	80 SH 80 LH	- 80 LP	47	59	51	63	56	68	59	71
90 S 90 L	90 SH 90 LH	90 SP 90 LP	49	61	53	65	61	73	65	77
100 L 100 LA	100 LH 100 AH	100 LP 100 AP	51	64	55	68	59	72	63	76
112 M	112 MH	112 MP	54	66	58	70	61	74	64	77
132 S - -	132 SH 132 MH 132 LH	- 132 MP -	60	73	64	77	57	70	60	73
- 160 M 160 L	160 SH 160 MH 160 LH	160 SP 160 MP 160 LP	66	79	70	83	60	73	64	77
180 MX 180 LX	- -	- -	66	79	70	83	60	73	64	77
- -	180 MH 180 LH	180 MP 180 LP	62	75	66	79	60	73	64	77
200 LX	200 XH	-	62	75	66	79	60	73	64	77

Protection classes as per DIN EN 60034-5

Protection against touching moving and live components as well as against entry of solid foreign bodies, dust and water. The protection class is stated by the letters IP (**I**nternational **P**rotection) and two code letters. (e.g. IP55)

1st code number	Protection class: Brief description	Protection class: Explanation according to standard IEC60034-5
5	Protection against touching, foreign bodies and dust	Complete protection against touching. Harmful quantities of dust cannot enter.
6	Protection against touching, foreign bodies and dust	Complete protection against touching. Dust cannot enter.
2nd code number	**Brief description**	**Explanation**
5	Protection against water	Protection against water jets from all directions. Harmful quantities of water cannot enter.
6	Protection against water	Protection agains heavy seas and strong water jets from all direction. Harmful quantities of water cannot enter.

Motors for indoor installation

NORD recommends the following options for indoor installation:

	Indoor installation, dry	Indoor installation, damp
Motor version	IP 55 (Standard)	IP 55 (Standard)
Temperature fluctuations and/ or high humidity	—	KB, SH, FEU
Vertical version	RD	RDD

Motor for outdoor installation

NORD recommends the following options for outdoor installation:

	Outdoor installation	Extreme ambient conditions
Motor version	IP 55 (Standard)	IP 66
Temperature fluctuations and/ or high humidity	AS55 or AS66, KB, SH, EP	
Vertical version	RD	RDD

Option KKV (encapsulated terminal box) can be supplied for both types of installation if required.

Outdoor installation of AS66 or AS55

For outdoor installation or use of motors in damp environments, we recommend **Option AS66** or **AS55**.

Measures AS66	Measures AS55 - only for brake motors
• IP66 Protection class	• IP55 protection class
• Terminal box, encapsulated	• Brake IP55 RG (corrosion-protected version)
• Motor bearings with sealing discs (2RS)	• Painting 2 or 3 (⇨🕮 A17)
• IP66 brake	
• Painting 2 or 3 (⇨🕮 A17)	

⚠ For outdoor installation of vertical versions (e.g. IM V1 or IM V5 ⇨🕮 C24 and above) we **urgently** recommend the **option** "**double fan cover"** (RDD).

According to the version, if possible the cable gland into the terminal box should enter from below!

Heating of the motor with current through the stator windings

If moisture forms in the motor because it is not equipped with standstill heating, there is an alternative, by which the motor can be heated while at a standstill. For this, 4-10% of the nominal motor voltage is applied to the stator terminals U1 and V1 by means of a transformer.
20-30% of the nominal motor current are sufficient to provided adequate heating during standstill.

The motor must not be heated while it is running! If there are no empirical values for the selection of the necessary transformer, please consult NORD about the required power.

Brakes

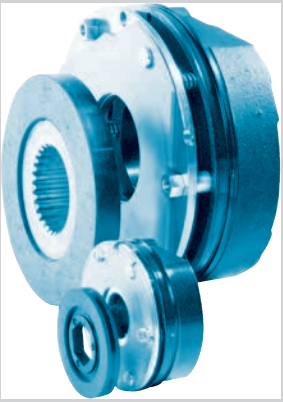

- TECHNICAL EXPLANATIONS
- TECHNICAL DATA
- SWITCHING VARIANTS

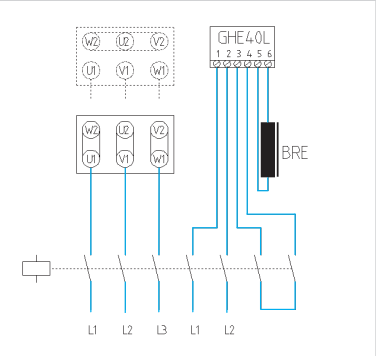

www.nord.com

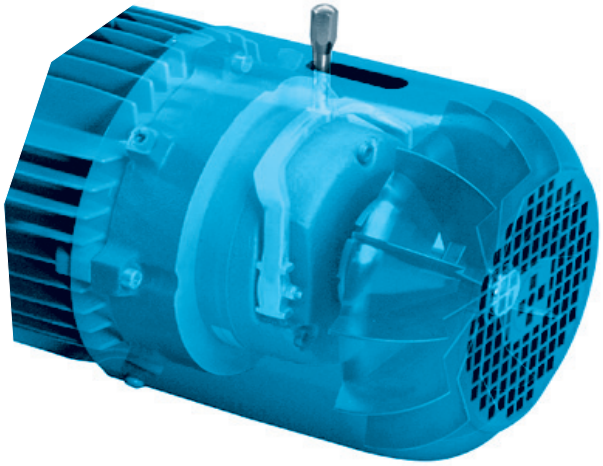

NORD brake motors

are equipped with DC-excited spring pressure brakes. The brakes prevent accidental rotation of machines (as holding brakes) or bring rotation of the machine to a standstill (as a service brake or for emergency stop).

Environment

The brake linings are asbestos-free.

Safety

The braking action is activated on interruption of the current (idling current principle).
The brake can no longer be released if the brake linings are worn.

Idling current principle

The brake disc is located between the brake bearing cover and the rotor plate. The brake disc has a brake lining on both sides. The brake disc transfers the braking torque to the motor shaft by means of the coupling. The brake disc can be moved in an axial direction on the coupling. The rotor plate presses the brake disc against the brake cover plate by means of spring pressure. The friction between the rotor plate and the brake lining and between the brake bearing cover and the brake lining produces the braking torque. The brake is released by an electromagnet (magnetic component).

After the current is switched on, the electromagnet pulls the rotor plate back from the brake lining by several tenths of a millimetre against the pressure of the spring. This allows the brake disc to rotate freely. Interruption of the current causes the magnetic force to collapse, so that the spring pressure predominates. Therefore the brake is automatically activated.

Brake activated Brake released

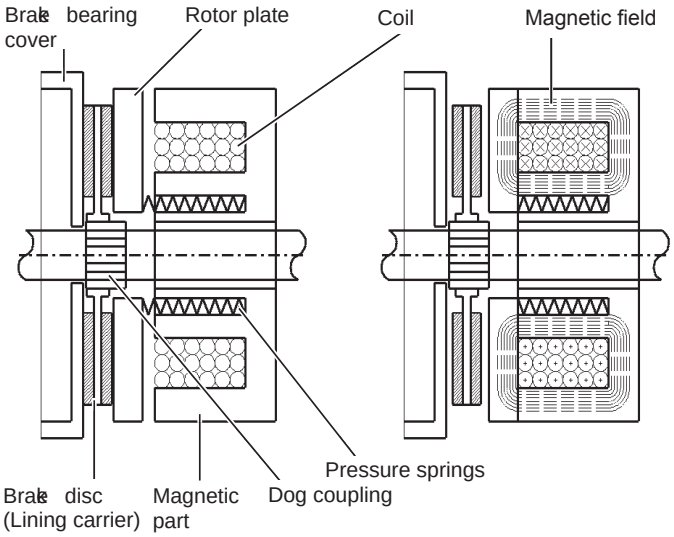

Power-to-apply principle

Brakes which are activated by the force of an electromagnet are designated as power-to-apply brakes. (Please enquire!)

Brake type codes

BRE 100 RG HL [...]

- further options possible
- Manual brake release
- Rustproof design
- Brake size /brake torque
- Brake

Example

BRE 40 FHL SR

Brake **40** Nm
with lockable manual release **FHL**
Dust and corrosion protected version **SR**

Type code for brake rectifiers

Example

G H E 4 0 L

- Protection of electronic components
- Current loading
- Voltage range
- Type of DC switch-off
- Type of rectification
- Rectifier

Explanations

1st place: **G**: Rectifier

2nd place:
Type of rectification
H: Half-wave (one-way circuit)
V: Full wave (bridge circuit)
P: Push (brief full wave, then half-wave) rapid rectifier

3rd place:
Type of DC switch-off
E: via external contact (circuit breaker)
U: be internal voltage evaluation

4th place:
Voltage range
2: up to $275V_{AC}$
4: up to $480V_{AC}$
5: up to $575V_{AC}$

5th place:
max current load
0: 0.5A (75°C)
1: 1.5A (75°C)

6th place: Protection of electronic components against vibration and moisture
L: Paint coating
V: Fully encapsulated

Switching variants ⇨📖 B16 and above

Brake torque (M_B)

According to DIN VDE 0580-2011, the switching torque as a characteristic of the braking torque is defined for a sliding speed of 1m/s relative to the average friction radius.
This applies to brakes which have been run in. The effective braking torque is not identical to the switching torque, this should be considered as a guideline value.

The magnitude of the actual effective braking torque depends on the temperature, speed (rubbing speed), ambient conditions (dirt, moisture) and the degree of wear. This must be taken into account during planning.

⚠ The full braking torque is only available after a short running-in period.

The rubbing surfaces of the brakes must be dry. **Under no circumstances must they come into contact with grease or oil! Grease or oil on the rubbing surfaces greatly reduces the braking torque.**

Dependency of the braking torque on speed

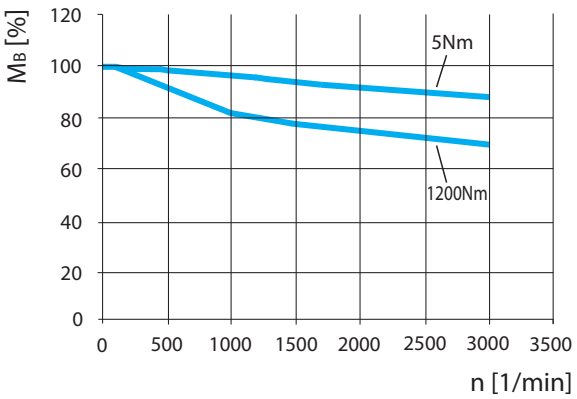

Average values between the characteristic curves,

- upper curve - small brakes (5Nm and above)
- lower curve - large brakes (400...1200Nm)

Brakes - Standard configuration for 4-pole motors

Type				BRE 5	BRE 10	BRE 20	BRE 40	BRE 60	BRE 100	BRE 150	BRE 250	BRE 400
	IE1	IE2	IE3	M_B [Nm]								
63	S/L**	-	-	**5**	10 *1)							
71	S/L**	-	-	**5**	10 *							
80 80	S ** L	SH ** LH	- LP	**5** 4) 5	10 **10**	20 * 20 *						
90 90	S L	SH LH	SP LP		10	**20**	40 *					
100 100	L LA	LH AH	LP AP			**20** 4) 20	40 * **40**	60 *1) 60 *1)				
112 112	M -	SH MH	- MP			20 20	**40** 40	60 **60**				
132 132 132	S M MA	SH MH LH	SP MP -					**60** 60 60	100 **100** 100	150 * 150 * **150 ***		
160 160 160	- M L	SH MH LH	- MP LP						100 100 100	**150** **150** 150	250 250 **250**	
180 180 180 180	MX LX - -	- - MH LH	- - MP LP							150 150	**250** **250** **250** **250**	 400 400
200	LX	XH	-								250	**400**
Extra weight [kg]				2	3	5,5	7	10	16	22	32	50
J [10^{-3} kg m^2]				0,015	0,045	0,153	0,45	0,86	1,22	2,85	6,65	19,5

Brake torques in bold type: Standard version

* IP66 is not possible

** Please enquire for low price, non-adjustable BRH-type holding brakes with lower torques.

1) Manual release not possible!

4) For operation as a service brake with high switching precision we recommend the use of the next larger size of brake, with the torque adapted to the application.

The selection of a standard combination of motor and brake according to the overview above must be carried out by careful planning. The braking torque must be specified according to the requirements of the application. It should be noted that motors of the same type, but with different numbers of poles develop very different torques, especially 4-pole motors in comparison with 8-2-pole motors (rated, starting and breakdown torques ⇨📖 Table C2-C23).

Among other things, the design of the drive units is orientated to both the torque required for the application and the motor torque. If necessary, the braking torque must be considerably reduced (⇨📖 Table B5), so that there is no overload of the gear unit when large moving masses are braked (⇨📖 B11 “Selection of brake size”).

Holding brake • Service brake • Emergency stop brake

The differentiation between a “holding brake”, a “service brake” and am “emergency stop brake” results from the type of application. A holding brake has the task of preventing a drive chain, which is at a standstill or is near to standstill, from starting to move.
As soon as a brake needs to produce a significant amount of friction it is known as a service brake. The relevant friction and the switching frequency must be determined and taken into account for the selection of the brake (⇨📖 B10-11).
For the emergency stop function of a brake, very large masses must be braked once and the brake correspondingly large amounts of energy are applied to the brake. In this case, the selection of the brake must be made according to the maximum permissible friction for each braking process (⇨📖B11 “Friction depending on switching frequency”).

Adjustment of braking torque

If required, we can supply brake s with reduced brak ng torques.

Reduction of the brak ng torque is carried out be removing pressure springs or by means of an adjustment ring.

Even finer adjustment of the braking torque is possible by rotating an adjustment ring (only BRE 5 to BRE 40).

⚠ The switching times change for reduced brak ng torques!
Release is faster - application takes longer

Number of springsn	BRE 5	BRE 10	BRE 20	BRE 40	BRE 60	BRE 100	BRE 150	BRE 250	BRE 400
	M_B [Nm]								
8								250	400
7	5	10	20	40	60	100	150		
6								187	300
5	3,5	7	14	28	43	70	107		
4	3	6	12	23	34	57	85	125	200
3	2	4	8	17	26	42	65		

Reduction of braking torque with the adjustment ring	BRE 5	BRE 10	BRE 20	BRE 40
	M_B [Nm]			
• **for each division of the adjustment ring**	0,2	0,2	0,3	1
• **Smallest achievable braking torque**	0,8	1,6	4,4	5

Wear

The brake lining are subject to different amounts of wear according to their use. Wear of the material reduces the thick ess of the brake disc and increases the air gap.

This must be adjusted once the air gap has reached its mak mum permissible value. Once the brake disc thick ess has reduced to the minimum permissible value, it must be replaced by a new one.

⚠ The brake release time increases as the air gap becomes larger!

Electrical design

The brake windings are designed for continuous operation. At the rated voltage they heat up in a continuously released state according to heat class 130(B) (Temperature increase ≤ 80K). The brakes are supplied with DC current. For this, current from the AC mains is rectified.
Half wave and bridge rectifiers are available as well as rapid switching rectifiers whose function will be described in the following sections. Selection of the rectifier should be made according to the requirements of the application.

Please note the section ‚Excess voltages' for DC supplies without a rectifier ⇨📖B7**!**

To protect against freezing, the brakes can be electrically heated, ⇨📖B14 “Standstill heating of brakes with bifilar windings (Option BRB)” **Please ask!**

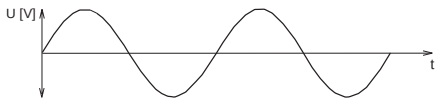

Sine wave AC voltage

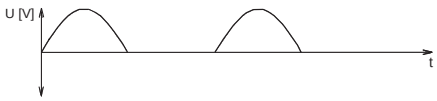

Voltage form for half-wave rectifiers
$U_{DC} = U_{AC} \times 0.45$

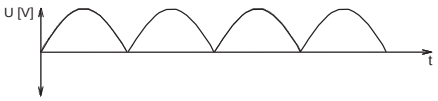

Voltage form with bridge rectifiers
$U_{DC} = U_{AC} \times 0.9$

Brake switching characteristics

The build-up of the magnetic field to release the brake and its collapse on application of the brake requires a certain amount of time. This delay is often undesirable, but it can be effectively shortened by means of suitable measures.

Activation of the brake (application)

AC switch-off
(rectifiers GVE, GHE, GPE)

- **Slow brake activation**

If only the AC side of a bridge or half wave rectifier is disconnected from the mains, a DC current continues to flow through the rectifier until the magnetic field in the brakes has been reduced.
The brake is only applied when the magnetic field has collapsed to a minimum amount. The time for the collapse of the field depends on the inductance of the brake and the resistance of the windings. As supplied, terminals 3 and 4 of the standard rectifier are connected by means of a wire bridge.
These must not be removed for AC switching.

DC switch-off
(rectifiers GVE, GHE, GPE) and external contact

- **Accelerated brake activation**

The magnetic field of the brake collapses rapidly and the braking action occurs quickly if the interruption of the current is made on the “DC side” between the rectifier and the brakes. This interruption can be implemented by means of a contact between terminals 3 and 4 of the rectifier (see circuit example). The contact must be suitable for the switching load due to the DC current. As supplied, terminals 3 and 4 of the standard rectifier are connected with a wire bridge.
This must be removed for DC switching.

Accelerated brake activation
⇨📖B14 Option “Current measurement relay (IR)

Activation of the brake (application)

Under-excitation with quick switching rectifiers (GPU, GPE) e.g. mains voltage 230V_{AC} and brake voltage 205V_{DC}

- **High speed brake activation**

If the reduction of the application time by means of DC switching is not sufficient, under-excitation of the brake with the aid of a quick switching rectifier is advisable. After the brake has been released, the quick switching rectifier switches from bridge rectification to half-wave rectification. This halves the output voltage (DC) and the current. (in the electrically released condition, the supply-voltage to the brake can be reduced to about 30% of the rated value without the brake being applied).
At half voltage, the energy of the magnetic field is reduced to a quarter in comparison with the energy at full voltage (the same also applies for the heating of the coil).
On the other hand, switch-off is carried out by DC. A weakened magnetic field collapses more quickly than a full strength field. As a result, with this weakened field, the brake is applied more quickly than a brake with a full field.
In this switching combination, accelerated release by over-excitation is not possible!

⚠ **This switching type must not be combined with a noise-reduced brake.**

Brass foil

A further possibility for very rapid activation of the brake is the use of a brake with brass foil. The brass foil is located between the rotor plate and the magnetic part of the brake and is 0.3mm thick This introduces a large magnetic resistance in the magnetic circuit of the brake, which only allows a weakened field to build up. The application behaviour of a brake with a magnetic field which is weakened in this way is the same as for the behaviour with under-excitation. Release of a brake with brass foil is slower than for release without the brass foil. The reserve for wear is reduced by the thickness of the brass foil. It is recommended that brakes with brass foil are only used for over-excitation in combination with a quick switching rectifier, if the full braking torque is required. Brakes with brass foil in combination with standard rectifiers should only be used with the brake torque reduced to approx 50%.

Use in combination with quick switching rectifiers for under-excitation is not recommended!

Releasing the brake

- **Normal brake release**

The release of the brake has already been explained in the Section “Idling current principle” (⇨📖 B2).

Over-excitation with quick switching rectifiers (GPU, GPE2) e.g. mains voltage 230V_{AC} and brake voltage 105V_{DC}

- **Accelerated brake release**

The rapid action rectifier is briefly in bridge rectification mode (Push). For a short time, double the rated voltage is applied to the brake. The force with which the stator disc is pulled in by the magnetic component is enormously increased due to the double voltage, so that the rotor plate is released considerably quicker and the brake is released more quickly than with normal excitation. After the brake has been released, the quick switching rectifier switches from bridge rectification to half-wave rectification. The rated voltage is then applied to the brake terminals.
In this switching combination, accelerated activation of the brake by under-excitation is not possible!

Excess voltages

High voltages may occur when a brake is switched off. This results in severe erosion of the switching contacts. In addition, the brake can be destroyed by the high voltage.

NORD rectifiers are equipped with an appropriate protective circuit. This prevents the occurrence of impermissible excess voltages.

Other circuits, primarily for the supply of brakes from an external voltage source, can be equipped with additional protection. Please ask

NORD brake rectifiers		
	Technical data	
Bridge rectifiers	**GVE20L/V**	
Rated voltage	$230V_{AC}$	
Max permissible voltage range	110V...275V+10%	
Output voltage	$205V_{DC}$ ($U_{DC} = U_{AC} \times 0.9$)	
Rated current up to 40°C	1.5A	
Rated current up to 75°C	1.0A	
DC switch-off	via ek ernal contact possible	
Half-wave rectifier	**GHE40L/V**	**GHE50L/V**
Rated voltage	$480V_{AC}$	$575V_{AC}$
Max permissible voltage range	230V...480V+10%	230V...575V+10%
Output voltage	$216V_{DC}$ ($U_{DC} = U_{AC} \times 0.45$)	$259V_{DC}$ (U_{DC} = UAC x 0.45)
Rated current up to 40°C	1.0A	1.0A
Rated current up to 75°C *	0.5A	0.5A
DC switch-off	by ek ernal contact or current measuring relay possible	
Brief bridge rectification then half-wave rectification	**GPU20L/V**	**GPU40L/V**
Rated voltage	230V	480V
Max permissible voltage range	200V...275V+/-10%	330V...480V+/-10%
Output voltage	$104V_{DC}$ ($U_{DC} = U_{AC} \times 0.45$)	$225V_{DC}$ ($U_{DC} = U_{AC} \times 0.45$)
Rated current up to 40°C	0.7A	0.7A
Rated current up to 75°C *	0.5A	0.5A
DC switch-off	is carried out automatically internally! This is deactivated via bridge 3-4.	
Brief bridge rectification then half-wave rectification	**GPE20L/V**	**GPE40L/V**
Rated voltage	230V	480V
Max permissible voltage range	200...275V+/-10%	330V...480V+/-10%
Output voltage	$104V_{DC}$ ($U_{DC} = U_{AC} \times 0.45$)	$225V_{DC}$ ($U_{DC} = U_{AC} \times 0.45$)
Rated current up to 40°C	0.7A	0.7A
Rated current up to 75°C *	0.5A	0.5A
DC switch-off	by ek ernal contact or current measuring relay possible	

* Normally installation of the rectifier in the motor terminal box is permissible.
In the case of greater thermal loads or higher currents the rectifier must be mounted outside of the terminal box e.g. in a separate terminal box on the the fan cover or in the control cabinet.

Brake connection voltages

The brakes are available with the following coil voltages:
24VDC, 105VDC, **180**VDC, **205**VDC, 225VDC, 250VDC (preferred voltages are printed bold.)

Supply voltage [V_{AC}]	Standard rectifier			
110 - 128	GVE20			
180 - 220		GVE20		
205 - 250			GVE20	
210 - 256	GHE40			
225 - 275				GVE20
360 - 440		GHE40		
410 - 480			GHE40	
410 - 500			GHE50	
450 - 550				GHE50
Coil voltage (Brake) [V_{DC}]	105	180	205	225

Supply voltage [V_{AC}]	Quick release - quick switching rectifier			
200 - 256 **(230)**	GPU20 / GPE20			
380 - 440 **(400)**		GPU40 / GPE40		
380 - 480 **(460)**			GPU40 / GPE40	
450 - 480				GPU40 / GPE40
Coil voltage (Brake) [V_{DC}]	105	180	205	225

Supply voltage [V_{AC}]	Quick application - quick switching rectifier		
200 - 275 **(200)**	GPU20 / GPE20		
200 - 275 **(230)**		GPU20 / GPE20	
200 - 275 **(250)**			GPU20 / GPE20
Coil voltage (Brake) [V_{DC}]	180	205	225

Optimal values are printed bold

Brake switching times (average values, valid with nominal air gap)

Rectifier	V_{AC} Rectifier	V_{DC} Brake	Switch-off	BRE5		BRE10		BRE20		BRE40		BRE60		BRE100		BRE150		BRE250		BRE400	
			[ms]	t_{tr}	t_{av}	t_{tr}	t_{av}	t_{tr}	t_{av}	t_{tr}	t_{av}	t_{tr}	t_{av}	t_{tr}	t_{av}	t_{tr}	t_{av}	t_{tr}	t_{av}	t_{tr}	t_{av}
GHE 4...	230	103	AC	35	130	60	150	85	200	100	180	120	200	150	230	270	300	300	520	400	650
GHE 4...	400	180																			
GHE 5...	500	225																			
GVE 2...	230	205																			
GHE 4...	230	103	DC extern	35	18	60	20	85	25	100	20	120	22	150	24	270	28	300	38	400	65
GHE 4...	400	180																			
GHE 5...	500	225																			
GVE 2...	230	205																			
GPU 2...	230	205	DC intern	35	30	60	34	85	37	100	34	120	35	150	37	270	39	300	46	400	85
GPU 2...	230	103		18	35	24	40	38	45	55	40	70	42	85	44	120	48	140	58	180	95
GPU 4...	400	180																			
GPU 4...	480	225																			
GPE 2...*	230	103	DC extern	18	5	24	5	38	8	55	8	70	12	85	20	120	25	140	34	-	-
GPE 4...*	400	180																			
GPE 4...*	480	225																			
GPE 2...*	230	103	DC IR	18	23	24	23	38	24	55	25	70	31	85	34	120	40	140	50	-	-
GPE 4...*	400	180																			
GPE 4...*	480	225																			

*** Brake with brass foil** ⇨ 🕮 B7

Definitions

M_B = Brak ng torque

I_B = Coil current

t_{av} = Delay in brak application, time from switching off the current until the start of the increase in brak ng torque.

t_{az} = Build-up time. Time from the start of build-up of the brak ng torque until 90% of the nominal value is reached.
Among other things, the build-up time of the brak torque depends on the speed and can therefore only be roughly predicted.

t_{tr} = Release time. The time from switching on the current until reduction of the brak ng torque to 10% of the nominal value.

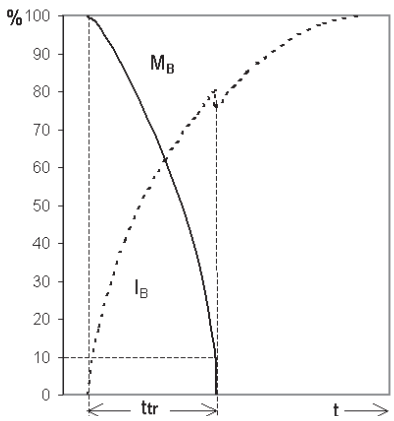

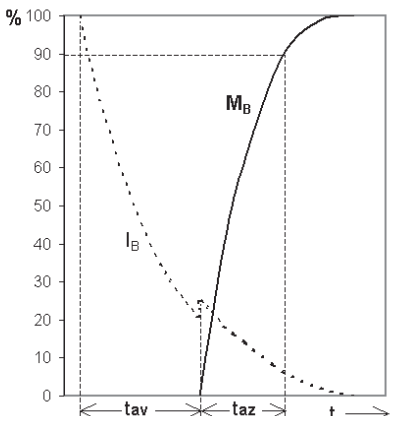

* Technical data of brakes with protection class IP55			Technical data of brakes with protection class IP66 are available on request								
			BRE5	BRE10	BRE20	BRE 40	BRE 60	BRE 100	BRE 150	BRE 250	BRE 400
Brak ng torque	M_a	[Nm]	5	10	20	40	60	100	150	250	400
Nominal air gap		[mm]	0,2	0,2	0,3	0,3	0,3	0,4	0,4	0,5	0,5
Adjustment of air gap		[mm]	0,6	0,8	0,8	0,9	1	1,1	1,1	1,2	1,2
Max wear before rotor replacement		[mm]	3	3	2,8	3	3	3,5	3,5	2,5	3,5
Min. permissible lining thick ess		[mm]	4,5	5,5	7,5	9,5	11,5	12,5	14,5	16,5	16
** Max permissible friction per brak ng operation	W_{max}	[x 10³]	1,5	3	6	12,5	35	50	75	105	150
** Friction before adjustment.	W_{RN}	[x 10⁷]	5	12	20	35	60	125	200	340	420
Max permissible thermal load	P_R	[W]	80	100	130	160	200	250	300	350	400
*** Coil current with 24V_{DC}	I_N	A_{DC}	0,92	1,17	1,42	1,69	2,18	3,33	3,2	4,14	6,0
Coil current with 105V_{DC}	I_N	A_{DC}	0,21	0,32	0,39	0,46	**0,6**	**0,88**	**0,88**	**1,14**	**1,38**
Coil current with 180V_{DC}	I_N	A_{DC}	0,12	0,16	0,19	0,25	0,3	0,46	0,4	**0,6**	**0,78**
Coil current with 205V_{DC}	I_N	A_{DC}	0,11	0,13	0,15	0,24	0,28	0,44	0,34	**0,54**	**0,68**
Coil current with 225V_{DC}	I_N	A_{DC}	0,09	0,13	0,16	0,20	0,22	0,35	0,34	0,44	**0,63**
Coil current with 250V_{DC}	I_N	A_{DC}	0,09	0,11	0,14	0,18	0,19	0,31	0,3	0,38	**0,57**

* These values do apply for a speed range of 1200 - 1800 min^{-1}

** These values do not apply for the options RG or SR ⇨📖B13

*** 24V_{DC} must be available from the application

⚠ **Values printed bold** - The maximum permissible current ratings of the rectifier must be complied with ⇨📖B8!

These values for the mak mum permissible friction per brak ng cycle apply for the rare cases of emergency brak ng. For frequent brak ng cycles we recommend that the friction is less than 10% of the stated value in order to achieve good wearing times for the brak linings. Please consult us in case of values above 10% of the stated friction per brak ng cycle.

Calculation of brake size

Selection of brake size

The torque and moment inertia relate to the motor speed. Gear output torques must always be divided by the gear ratio.
Moments of inertia for the gear unit must always be divided by the square of the gear ratio.

1. Selection according to static load (holding brakes)

$$M_{erf} = M_{stat} = M_{Load} \times K$$

2. Design according to static and dynamic load (service brakes)

$$\Sigma J = J_{Motor} + \frac{J_{Load}}{i^2}$$

Other moments of inertia (brakes, gear unit), can usually be neglected.

$$M_{dyn} = \frac{\Sigma J \times n}{9.55 \times tr}$$

$$M_{erf} = (M_{dyn} \pm M_{Load}) \times K$$

For a driving load: **M_{Load} must be entered as positive**
For a braking load: **M_{Load} must be entered as negative**

3. Check for maximum permissible friction

$$W = \frac{J \times n^2}{182{,}5} \times \frac{M_B}{M_B \pm M_{Load}} \Rightarrow \mathbf{W \leq W_{max}\ !}$$

For a driving load: **M_{Load} must be entered as negative**
For a braking load: **M_{Load} must be entered as positive**

For economic and technical reasons the brakes should not be overdimensioned.

⚠ Motors from various series, e.g. 8-2 pole travelling motors have considerably lower rated torques than standard 4-pole motors. We urgently recommend that great care is taken in the selection of brakes for travelling or similar applications. It is usually advisable to utilise the possibility of brake torque reduction (⇨📖B5 Brake torque adjustment)

Definition of abbreviations

c/h	=	Number of braking actions per hour
ΣJ [kg m^2]	=	Sum of all driven moments of inertia, related to the motor speed
i	=	Gear ratio
K	=	Safety factor ⚠ related to the application, selection according to individual design specifications. - Guide values: 0,8...3,0 - Lifting equipment: >2 - Lifting equipment with personnel safety : 2...3 - Travelling drives: 0,5...1,5
M_B [Nm]	=	torque provided by the brake
M_{dyn} [Nm]	=	Dynamic torque (deceleration torque)
M_{erf} [Nm]	=	Required braking torque
M_{Load} [Nm]	=	Load torque resulting from the application
M_{stat} [Nm]	=	Static torque (holding torque)
n [min^{-1}]	=	Motor speed
t_r [sec]	=	Slipping time: the time in which the drive unit should come to a standstill
W [J]	=	Frictional work per braking action
W_{max} [J]	=	Maximum permissible friction work per braking action

Manual release - HL

The braking effect of a brake with manual release can be released without dismantling, when no current is present.
To do this, the manual release lever is pulled in the direction of the air intake. Return is by means of spring pressure.

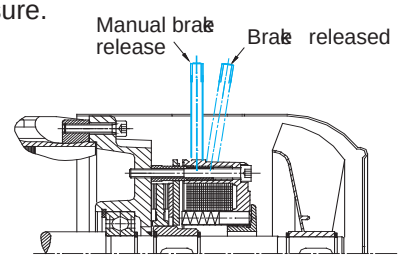

Lockable manual release - FHL

Brakes with manual release can be locked in the released state by means of a locking device.

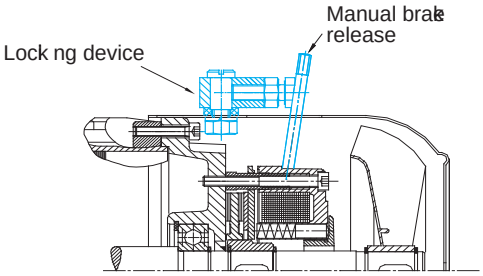

Micro switch - MIK

The brakes can be supplied with an attached micro switch for simple electrical monitoring of the release function.

A micro switch should be used if movement monitoring is necessary or required. The motor circuit breaker is triggered by the micro switch when the rotor disc is in contact with the magnetic part.
Then the motor can only start when the brake has released. Once the maximum air gap “a” has been reached the magnet no longer attracts the rotor disc. The motor circuit breaker is not triggered and the motor does not start. The air gap “a” must be re-adjusted.

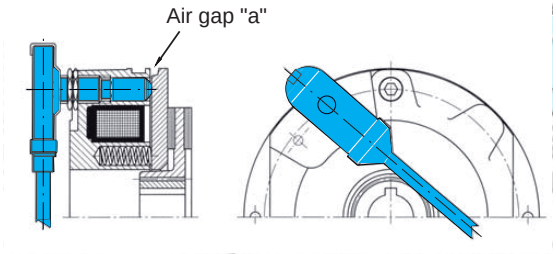

Protection against corrosion • Dust • Dirt • Moisture - RG, SR

1) B bearing cover painted and stainless friction disc - **Option RG** (only possible with protection class IP55)
2) B bearing cover painted and dust protection ring - **Option SR** including stainless friction disc (only possible with protection class IP55)
3) Protection class **IP66**, note motor protection type, **please ask**!
4) Protection class IP67 (Sea water brake), note motor protection type, **please ask**!

Sectional drawings

937 Manual brake release
938 Brake coupling
946 Fastening screw
971 O-ring
990 Rubbing plate
992 Dust protection ring
993 Brake lining
995 Compression spring
996 Compression piece
997 Adjustment ring 5-40 Nm
998 Socket / Sealing fin
999 V-Ring

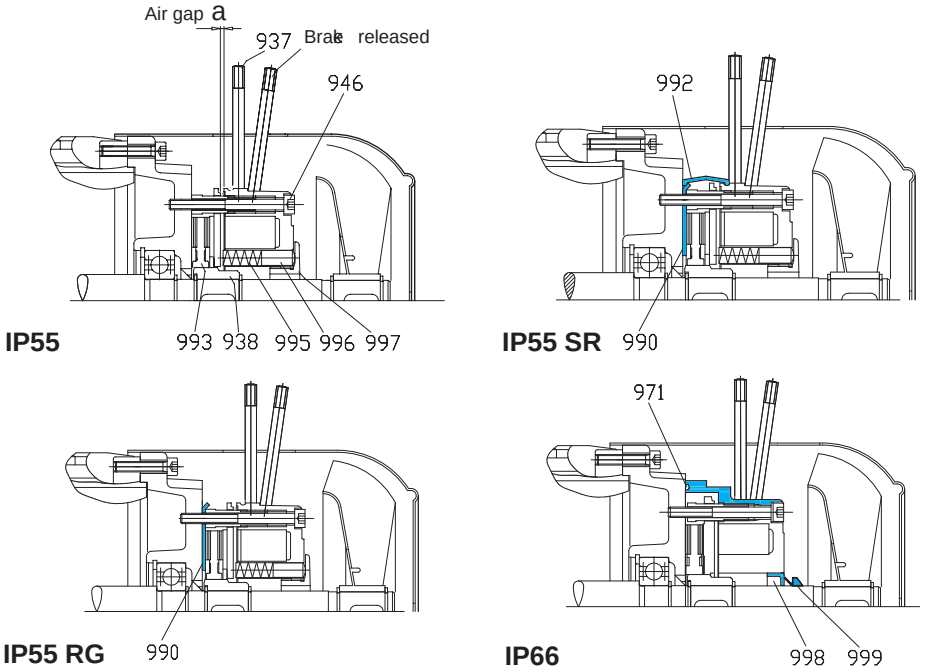

Current measuring relay (IR)

- **Accelerated brake activation**

Rectifiers which are directly wired to the motor terminals are supplied via the motor supply cable. This saves a separate supply line for the brake. After the motor is switched off, the brake remains electrically connected to the motor. As long as the motor has not come to a standstill, it works as a generator and continues to feed the brake via the rectifier, which considerably delays the activation of the braking effect.
This can result in an impermissible operating state, especially with loaded lifting equipment.

A current measuring relay must be used in order to achieve short application times with this switching variant. The current measuring relay measures the motor current. If the motor is switched off, the current measuring relay releases. At the same time, the brake is switched off by DC.

However, due to internal reaction times, the activation of the braking effect is slower than with normal DC switch-off.

The current measuring relay can only be used in combination with the rectifiers GVE, GHE and GPE!

Technical data		
	Current measuring relay (IR)	
Switching voltage	42...550 V_{DC}	
Switching current	1,0 A_{DC}	
Primary current	25 A_{AC}	50 A_{AC}
Max. primary current	75A (0,2 sec)	150A (0,2 sec)
Holding current	< 0,7 A_{AC}	< 0,7 A_{AC}
Max. operating temperature	-25°C... +90 °C	-25°C... +90 °C

Noise-reduced brake - NRB1

In order to reduce switching noise, the brakes can be supplied with an O-ring between the rotor disc and the magnetic part.

Use with rapid action rectifiers for under-excitation is not permitted.

Noise-reduced brake - NRB2

Noise due to torque oscillations in inverter operation or with single-phase motors can be effectively reduced by the use of rings on the couplings.

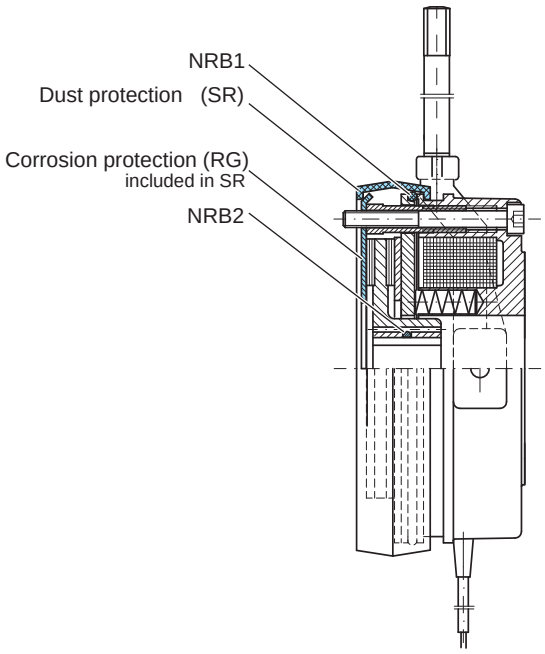

Standstill heating of brakes with bifilar windings- BRB

Bifilar-wound brakes have two identical partial windings, whose start and ends are led out and can be independently switched.

The magnetic field necessary to release the brake is produced if 2 currents flow in the same direction in the partial windings. After changing the polarity of the partial windings, two opposing currents flow and the magnetic fields mutually cancel themselves out. These currents heat up the windings, but in spite of this the brake remains applied.
In this case, the heating effect is considerably greater than when the brake is released. Therefore the coil voltage must be reduced for heating. This is done by the use of quick-switching rectifiers in an underexcitation circuit or by special wiring of the partial coils (release in parallel switching in the same direction, heating in opposing series connection).
Suitable switching versions can be supplied according to the required switching characteristics. (⇨📖B6)
Further information can be provided on request!

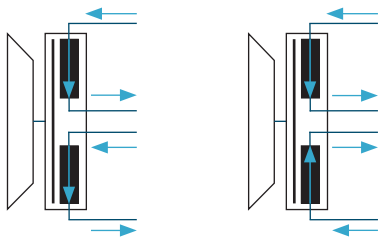

Double brake for theatre applications - DBR

Combinations of 2 brakes for theatre safety requirements are available in noise-reduced versions.
In order to reduce the switching noise (< 50 dB(A) with AC switch-off) the theatre version of the brakes has an O-ring between the rotor disc and the magnetic part.

According to DIN 56950, brakes must be activated by spring pressure, i.e. they are open when current is flowing and closed automatically if there is no voltage (idling current principle) A redundancy of the brakes is also necessary. In our range, this corresponds to the double brakes DBR.

Redundancy: Safety-relevant systems must be designed in parallel, so that if one component fails, the other component ensures the function.

The double brakes are mounted on the B bearing cover of the motor, which basically results in a longer version - please ask The design of a theatre brakes is usually carried out according to the load torque.

According to DIN 56950, the brakes must be able to hold at least 1.25 x the load (test load). It is advisable to design the brakes for 1.6 x and a maximum of 2.0 x the load torque.

Our theatre brakes achieve their full braking torque on the first braking action. It is not necessary to break in the brake linings.

⚠ **The coil voltages correspond to the values stated in this catalogue. Two rectifiers are required for the double brake. These are usually installed in the control cabinet. The brake cables are connected to free terminals in the brake terminal box.**
Combination with voltage reduction is not possible.

Note:

It is advisable to stagger the application of the brakes, as if they are applied simultaneously, the braking torques add up and can therefore cause damage to the gear unit and the system. If there is the possibility of an emergency stop, the gear unit should be appropriately designed to handle the full braking torque of both brakes!

Theatre brake

Type				Double brake DBR	Full braking torque	Reduced braking torque	
	IE1	IE2	IE3	M_B [Nm]			
63	S/L	-	-	6	2 x 6	2 x 4	2 x 3,5
71	S/L	-	-	6	2 x 6	2 x 4	2 x 3,5
80	S	SH	-	6	2 x 6	2 x 4	2 x 3,5
80	L	LH	LP	12	2 x 12,5	2 x 8,5	2 x 7
90	S	SH	SP	12	2 x 12,5	2 x 8,5	2 x 7
90	L	LH	LP	25	2 x 25	2 x 17,5	2 x 14
100	L	LH	LP	25	2 x 25	2 x 17,5	2 x 14
100	LA	AH	AP	50	2 x 50	2 x 35	2 x 28
112	M	SH	-	50	2 x 50	2 x 35	2 x 28
112	-	MH	MP	75	2 x 75	2 x 52	2 x 42
132	S	SH	SP	75	2 x 75	2 x 52	2 x 42
132	M	MH	MP	125	2 x 125	2 x 89	2 x 70
132	MA	LH	-	187	2 x 187	2 x 132	2 x 107
160	-	SH	-	187	2 x 187	2 x 132	2 x 107
160	M	MH	MP	187	2 x 187	2 x 132	2 x 107
160	L	LH	LP	300	2 x 300	2 x 225	2 x 150
180	MX	MH	MP	300	2 x 300	2 x 225	2 x 150
180	LX	LH	LP	300	2 x 300	2 x 225	2 x 150
200	LX	XH	-	500	2 x 500	2 x 375	2 x 250

Switching variants for brake motors (Examples)

The following selection shows the must usual switching variants for single-speed brake motors.
The correct combination of rectifier and coil voltage for the brake must be made according to the available supply voltage from ⇨ Table B8.

1. Motor Δ circuit: $400V_{AC}$
   Alternative Y - circuit: $400V_{AC}$
   Half-wave rectifier: GHE40L
   Separate supply: $400V_{AC}$
   Brake : $180V_{DC}$
   Switch-off: AC

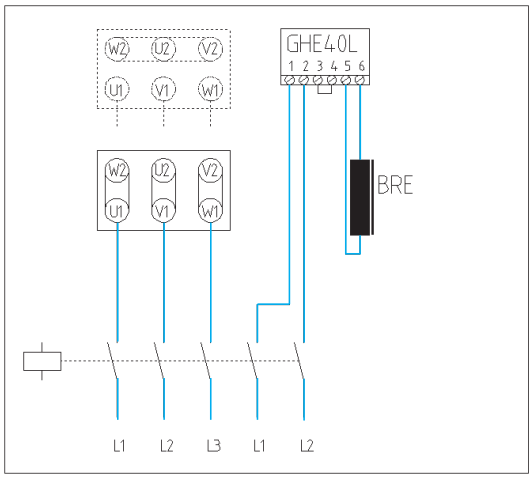

2. Motor Δ circuit: $400V_{AC}$
   Alternative Y - circuit: $400V_{AC}$
   Bridge rectifier: GVE20L
   Separate supply: $230V_{AC}$
   Brake : 205VDC
   Switch-off: AC

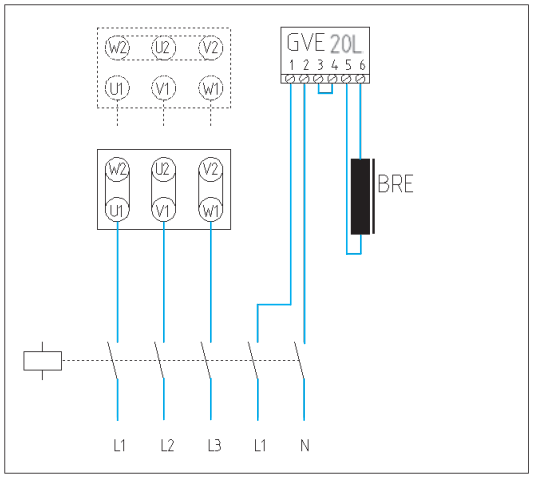

3. Motor Δ circuit: $400V_{AC}$
   Alternative Y - circuit: $400V_{AC}$
   Half-wave rectifier: GHE40L
   Separate supply: $400V_{AC}$
   Brake : $180V_{DC}$
   Switch-off: DC

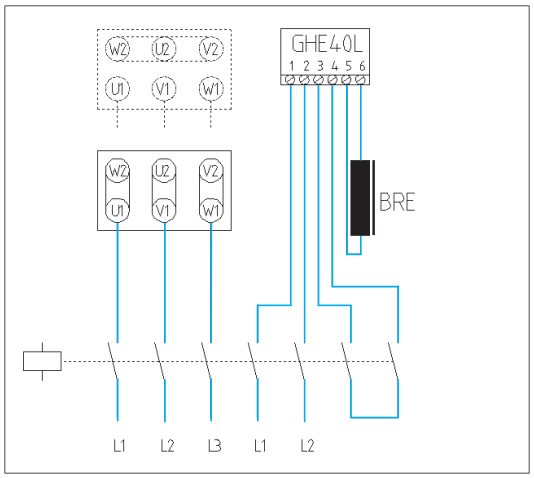

4. Motor Δ circuit: $400V_{AC}$
   Alternative Y - circuit: $400V_{AC}$
   Bridge rectifier: GVE20L
   Separate supply: $230V_{AC}$
   Brake : $205V_{DC}$
   Switch-off: DC

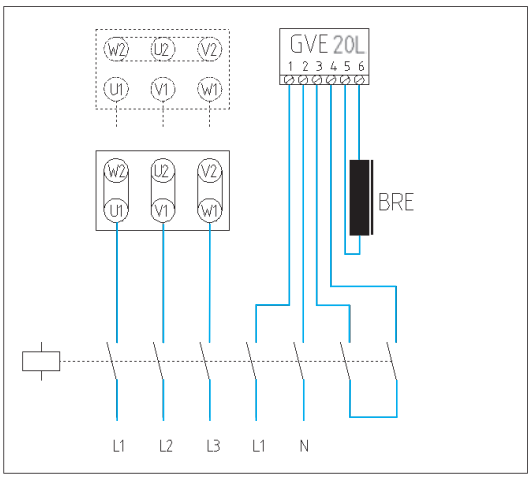

5. Motor Δ circuit: $230V_{AC}$ Δ
Alternative Y - circuit: $400V_{AC}$
Bridge rectifier: GVE20L
Supply via the motor terminals: $230V_{AC}$
Brake : $205V_{DC}$
Switch-off: AC

Brake applies very slowly!

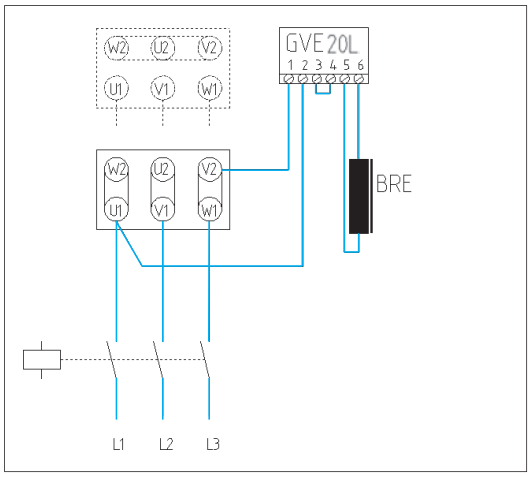

6. Motor Δ circuit: $400V_{AC}$
Alternative Y - circuit: $400V_{AC}$
Half-wave rectifier: GHE40L
Supply via the motor terminals: $400V_{AC}$
Brake : $180V_{DC}$
Switch-off: AC

Brake applies very slowly!

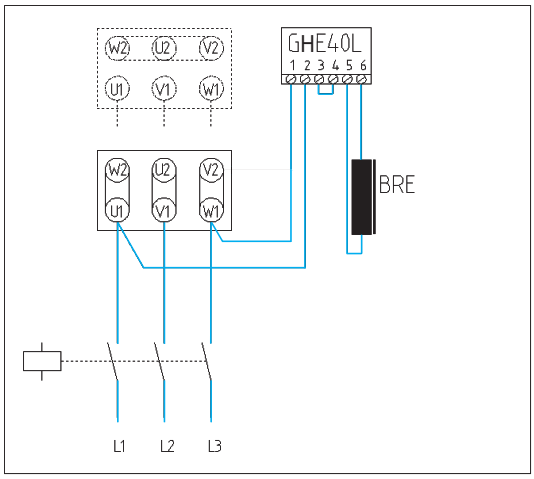

7. Motor Δ circuit: $400V_{AC}$
Alternative Y - circuit: $400V_{AC}$
Quick switching rectifier: GPU40L
Brake : $180V_{DC}$
Separate supply: $400V_{AC}$
Switch-off: DC, internal

Switching variants for rapid release and application

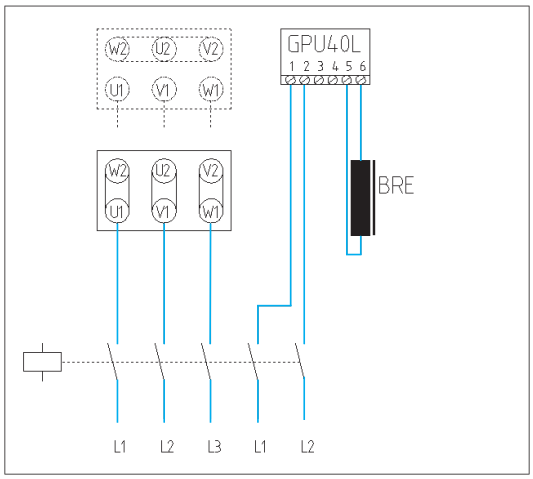

Typical for FI operation

8. Motor Δ circuit: $400V_{AC}$
Alternative Y - circuit: $400V_{AC}$
Quick switching rectifier: GPU20L
Brake : $105V_{DC}$
Separate supply: $230V_{AC}$
Switch-off: DC, internal

Switching variants for rapid release and application

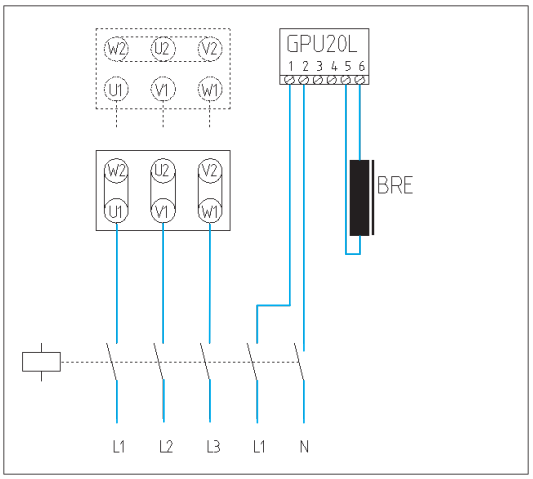

Typical for FI operation

Switching variants

9. Motor Δ circuit: $400V_{AC}$
Alternative Y - circuit: $400V_{AC}$
Quick switching rectifier: GPU20L
Brake : $205V_{DC}$
Separate supply: $230V_{AC}$
Switch-off: DC, internal

Switching variant for rapid application

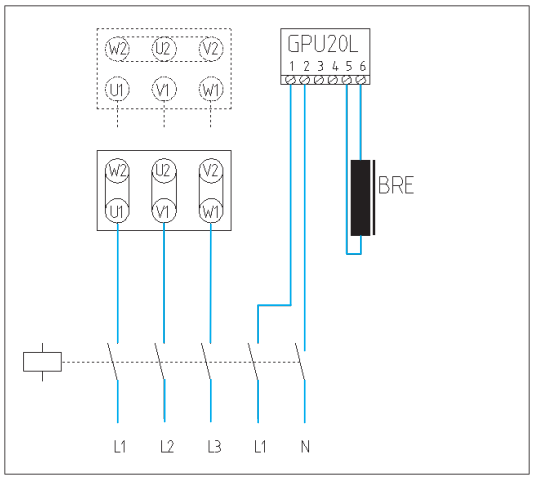

10. Motor Δ circuit: 400VAC
Half-wave rectifier: GHE40L
Brake : 180VDC
Supply via the motor terminals: $400V_{AC}$
Switch-off: **DC via current measuring relay**

Switching variant for rapid application

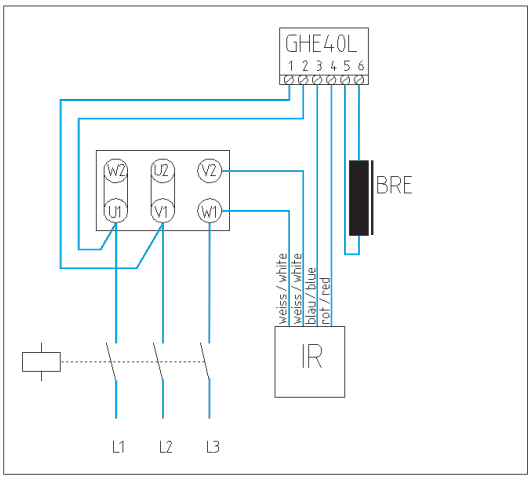

11. Motor Y - circuit: $400V_{AC}$
Half-wave rectifier: GHE40L
Brake : $180V_{DC}$
Supply via the motor terminals: $400V_{AC}$
Switch-off: **DC via current measuring relay**

Switching variant for rapid application

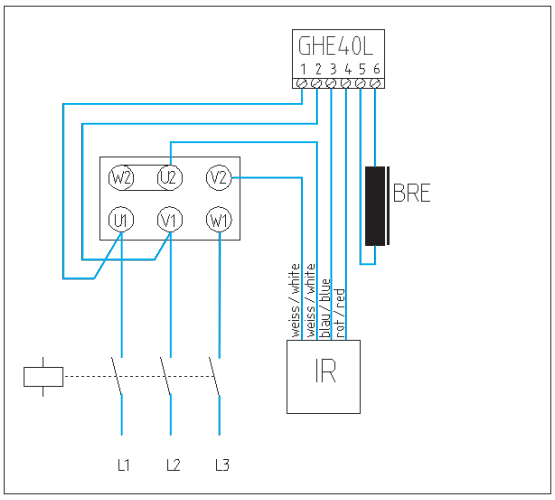

12. Motor Δ circuit: $400V_{AC}$
Quick switching rectifier: GPE40L
Brake : $180V_{DC}$
Supply via the motor terminals: $400V_{AC}$
Switch-off: **DC via current measuring relay**

Switching variants for rapid release and application

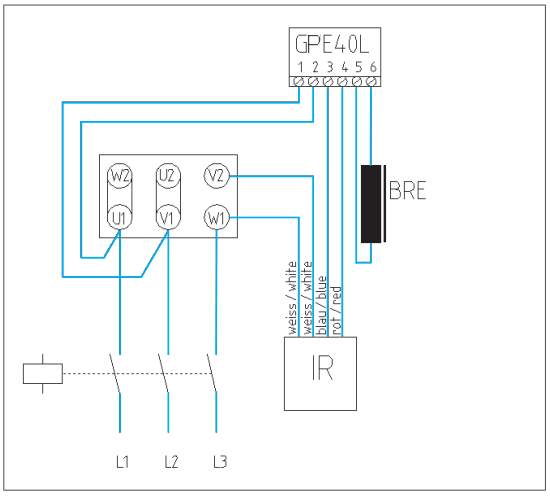

13. Motor Y - circuit: $400V_{AC}$
Quick switching rectifier: GPE40L
Brake : $180V_{DC}$
Supply via the motor terminals: 400VAC
Switch-off: **DC via current measuring relay**

Switching variants for rapid release and application

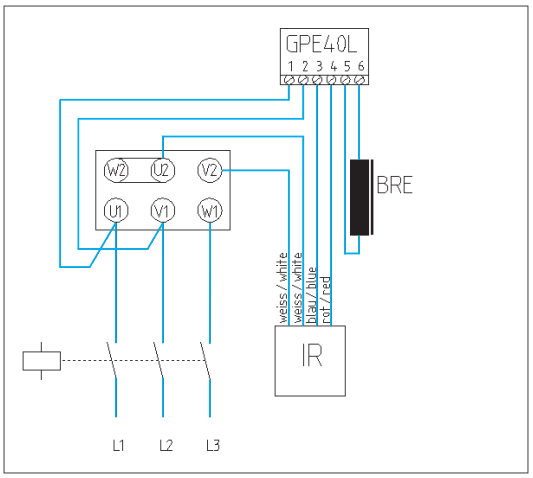

14. Motor Δ circuit: $230V_{AC}$
Bridge rectifier: GVE20L
Brake : $205V_{DC}$
Supply via the motor terminals: $230V_{AC}$
Switch-off: **DC via current measuring relay**

Switching variant for rapid application, Note the connection of the current measuring relay to the rectifier!

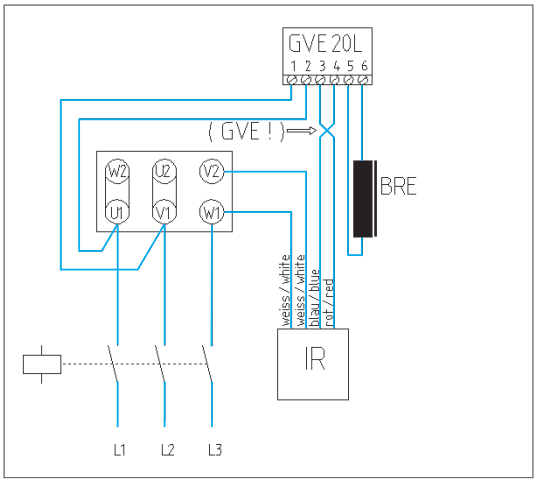

15. Motor Y - circuit: $400V_{AC}$
Bridge rectifier: GVE20L
Brake : $205V_{DC}$
Supply via the motor terminals: $230V_{AC}$
Switch-off: **AC**

Switching variant for connection via motor plug connector (MS)

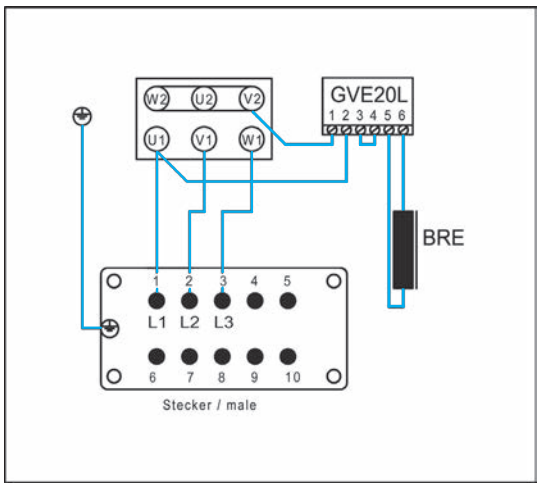

16. Motor Δ circuit: $400V_{AC}$
Half-wave rectifier: GHE40L
Brake : $180V_{DC}$
Supply via the motor terminals: $400V_{AC}$
Switch-off: **AC**

Switching variant for connection via motor plug connector (MS)

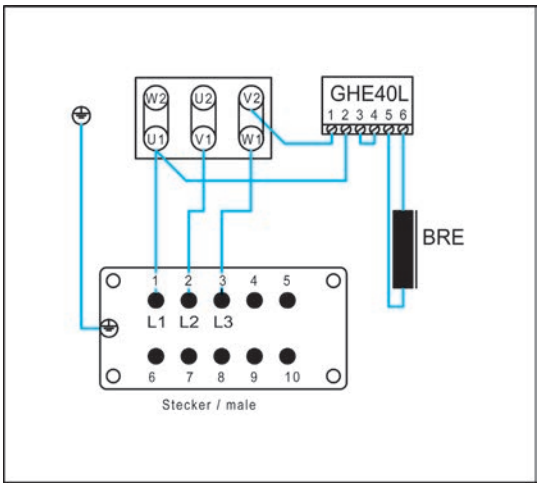

Notes

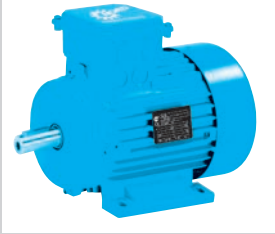

- **MOTOR DATA**
  - Standard + IE1 . . . . . C 2 - 13
  - IE2 . . . . . C 14 - 19
  - IE3 . . . . . C 20 - 21
  - ATEX Standard . . . . . C 22
  - ATEX IE2. . . . . C 23
- **DIMENSIONED DRAWINGS OF MOTORS**
  - B3 . . . . . C 24 - 25
  - B5 . . . . . C 26 - 27
  - B14 . . . . . C 28 - 29
  - B3-BRE . . . . . C 30 - 31
  - B5-BRE . . . . . C 31 - 33
  - B14-BRE . . . . . C 34 - 35
  - Options . . . . . C 36 - 42
  - NEMA . . . . . C 43

1000 1/min **230/400**
50 Hz

Type		T_{amb} -20 ... +45°C P_N S1, S9 [kW]	n_N [1/min]	I_N 400 V [A]	cos φ	
63	S/6	0,09	850	0,49	0,67	
63	L/6	0,12	865	0,65	0,62	
71	S/6	0,18	910	0,71	0,67	
71	L/6	0,25	920	0,92	0,67	8,5
80	S/6	0,37	930	1,22	0,7	
80	L/6	0,55	920	1,54	0,74	9,7
90	S/6	0,75	915	2,22	0,73	6,8
90	L/6	1,1	910	2,97	0,77	

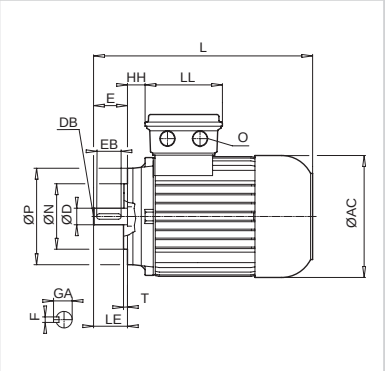

1500 1/min **230/400 V / 400/690 V**
50 Hz **4 - pole**

	T_{amb} -20 ... +45°C											Noise emission (⇨📖A51) self-cooled motors			
	P_N	n_N	I_N	cos	η			M_N	M_A/M_N	M_K/M_N	I_A/I_N	50 Hz 1500/min		J	kg
Type	S1, S9		400 V	φ	1/2 P_N	3/4 P_N	4/4 P_N					L_{PA}	L_{WA}		*
	[kW]	[1/min]	[A]		[%]	[%]	[%]	[Nm]				[db(A)]		[kg m²]	[kg]
**63 S/4	0,12	1335	0,55	0,64	40,9	48,1	49,9**	0,86	2,7	2,7	2,9	40	52	0,00021	3,6
**63 L/4	0,18	1360	0,68	0,64	51,2	56	56,2**	1,26	2,5	2,6	3,3	40	52	0,00028	4,2
**71 S/4	0,25	1380	0,76	0,77	51,7	58,2	61,3**	1,73	2,2	2,1	3,3	45	57	0,00072	5,4
**71 L/4	0,37	1380	1,09	0,71	52,8	59,2	64,4**	2,56	2,0	2,4	3,6	45	57	0,00086	6,3
80 S/4	0,55	1375	1,52	0,73	74,5	75,9	75,1	3,82	1,9	2,0	3,3	47	59	0,00109	8
80 L/4	0,75	1375	2,1	0,74	74,7	76,3	75,5	5,21	2,0	2,1	3,5	47	59	0,00145	9
90 S/4	1,1	1395	2,81	0,74	75,7	77,9	77,6	7,53	2,3	2,6	4,4	49	61	0,00235	12
90 L/4	1,5	1395	3,55	0,78	78,7	79,1	77,5	10,3	2,3	2,6	4,8	49	61	0,00313	14
100 L/4	2,2	1440	5,22	0,74	79,5	81,2	80,8	14,6	2,3	3,0	5,1	51	64	0,0045	18
100 LA/4	3	1415	6,54	0,80	83,3	84,2	83,3	20,2	2,5	2,9	5,4	51	64	0,006	21
112 M/4	4	1445	8,3	0,80	86,4	86,4	85,1	26,4	2,3	2,8	5,3	54	66	0,011	30
132 S/4	5,5	1445	11,4	0,81	88	88,5	87,9	36,5	2,1	2,7	5,5	60	73	0,024	44
132 M/4	7,5	1445	14,8	0,84	89,4	89,1	87,7	49,6	2,5	2,8	5,5	60	73	0,032	55
132 MA/4	9,2	1450	18,8	0,80	87,7	87,7	86,9	60,6	2,6	3,1	6,0	60	73	0,035	62
160 M/4	11	1455	20,9	0,85	89,5	89,6	88,8	72,2	2,4	2,9	6,5	62	75	0,050	78
160 L/4	15	1460	28,2	0,85	90,4	90,5	89,7	98,1	2,9	3,5	7,5	62	75	0,067	93
180 MX/4	18,5	1460	35,4	0,83	90,3	90,8	90,3	122	3,2	3,8	7,5	67	80	0,080	107
180 LX/4	22	1460	42,6	0,82	90,3	90,7	90,3	145	3,3	3,8	7,5	67	80	0,092	122
200 LX/4	30	1470	57,6	0,83	91,9	91,6	90,7	195	2,6	3,0	6,9	62	75	0,160	155

* Version B5, without options ** not IE1

- the mode can be found on the type plate from the gearbox -

Type Plate
(Geared motor)

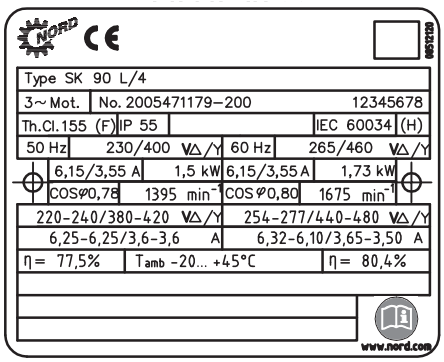

Type Plate
(Geared motor, not IE..)

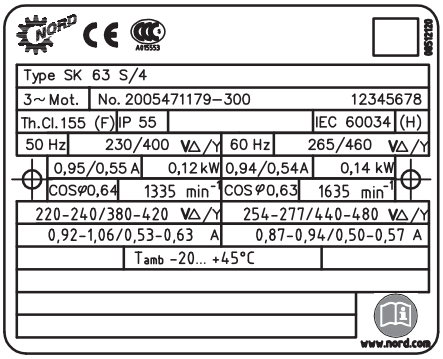

Type Plate
(IEC - motor)

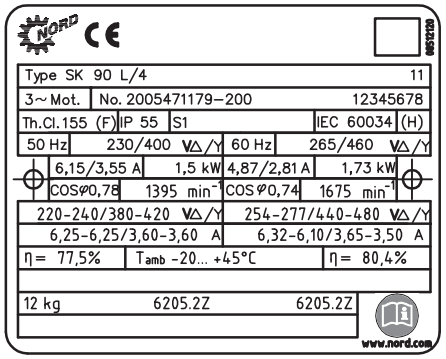

1800 1/min **265/460 V / 460 VΔ**
60 Hz **4 - pole**

	T_{amb} -20 ... +45°C											Noise emission (⇨📖A51) self-cooled motors			
	P_N	n_N	I_N	cos	η			M_N	M_A/M_N	M_K/M_N	I_A/I_N	60 Hz 1800/min		J	kg
Type	S1, S9		460 V	φ	1/2 P_N	3/4 P_N	4/4 P_N					L_{PA}	L_{WA}		*
	[kW]	[1/min]	[A]		[%]	[%]	[%]	[Nm]						[kg m²]	[kg]
63 S/4	0,14	1635	0,54	0,63	45,4	53,6	57,6	0,82	2,6	2,6	2,8	44	56	0,00021	3,6
63 L/4	0,21	1660	0,65	0,64	52,3	59,3	61,5	1,21	2,4	2,5	3,1	44	56	0,00028	4,2
71 S/4	0,29	1655	0,76	0,77	65,0	70,0	70,8	1,67	2,1	2,0	3,2	49	57	0,00072	5,4
71 L/4	0,43	1680	1,05	0,72	65,0	70,1	70,9	2,44	1,9	2,3	3,5	49	57	0,00086	6,3
80 S/4	0,63	1650	1,5	0,73	71,0	74,7	74,5	3,65	1,8	1,9	3,2	51	63	0,00109	8
80 L/4	0,86	1650	2,1	0,74	72,6	76,2	75,9	4,98	1,9	2,0	3,4	51	63	0,00145	9
90 S/4	1,27	1675	2,81	0,74	74,4	78,0	78,1	7,24	2,2	2,5	4,2	53	65	0,00235	12
90 L/4	1,73	1675	3,55	0,8	78,1	80,7	80,4	9,86	2,2	2,5	4,6	53	65	0,00313	14
100 L/4	2,55	1730	5,22	0,74	78,3	81,4	81,4	14,1	2,2	2,9	4,9	55	68	0,0045	18
100 LA/4	3,45	1700	6,35	0,80	81,6	83,5	82,4	19,4	2,4	2,8	5,2	55	68	0,006	21
112 M/4	4,6	1735	8,3	0,81	85,1	86,7	86,1	25,3	2,2	2,7	5,1	58	70	0,011	30
132 S/4	6,3	1730	10,9	0,81	83,1	85,8	86,2	34,8	2,0	2,6	5,3	64	77	0,024	44
132 M/4	8,6	1735	14,6	0,84	85,8	87,8	87,6	47,3	2,4	2,7	5,3	64	77	0,032	55
132 MA/4	10,6	1740	18,1	0,80	86,0	87,9	87,6	58,2	2,5	3,0	5,7	64	77	0,035	62
160 M/4	12,6	1750	20,4	0,88	89,2	90,0	89,2	68,8	2,1	2,50	6,2	66	79	0,050	78
160 L/4	17,3	1760	27,9	0,86	90,3	91,1	90,6	93,9	2,3	2,80	6,6	66	79	0,067	93
180 MX/4	21,3	1760	33,9	0,87	90,7	91,4	90,8	116	2,8	3,30	7,6	71	84	0,080	107
180 LX/4	25,3	1760	41,7	0,83	91,1	91,7	91,1	137	3,3	3,60	7,0	71	84	0,092	122
200 LX/4	34,5	1765	56	0,85	92,6	92,5	91,7	186	2,6	2,8	7,0	66	79	0,160	155

* Version B5, without options

1800 1/min **230/460 V & 460 V△ & 332/575 V**
60 Hz **4 - pole**

Standard CUS
S1

Type		P_N		n_N	M_N	I_N			cos	η	M_A/M_N	M_K/M_N	I_A/I_N	Codeletter	J	kg
						230 V	460 V	575 V	φ					⇨📖A28		*
		[HP]	[kW]	[1/min]	[Nm]	[A]	[A]	[A]		[%]					[kg m²]	[kg]
63	S/4	0,16	0,12	1700	0,67	0,88	0,44	0,37	0,66	52	2,7	3,5	2,5	F	0,00021	3,6
63	L/4	0,25	0,18	1680	1,02	1,12	0,56	0,46	0,71	57	2,3	2,5	2,7	E	0,00028	4,2
71	S/4	0,33	0,25	1710	1,40	1,56	0,78	0,66	0,64	63	2,4	2,7	3,1	G	0,00063	5,4
71	L/4	0,5	0,37	1720	2,05	1,9	0,95	0,8	0,69	71	2,3	2,7	3,5	F	0,00076	6,3
80	S/4	0,75	0,55	1710	3,07	2,7	1,35	1,12	0,71	72	2,2	2,3	3,5	F	0,00128	8
80	L/4	1	0,75	1650	4,34	3,66	1,83	1,46	0,74	70	2,2	2,3	3,9	G	0,00165	9
90	S/4	1,5	1,1	1660	6,33	4,84	2,42	1,94	0,78	73	2,5	2,8	4,9	G	0,00235	12
90	L/4	2	1,5	1660	8,6	6,34	3,17	2,54	0,80	74	2,5	2,8	5,1	G	0,00313	14
100	L/4	3	2,2	1705	12,3	9	4,5	3,63	0,81	76	2,3	2,6	4,9	G	0,00450	18
100	LA/4 **	5	3,7	1725	20,5	15,2	7,62	6,1	0,75	81	2,7	3,1	5,1	G	0,00750	21
132	S/4	7,5	5,5	1735	30,3	19,8	9,9	7,92	0,82	85	2,4	2,7	5,4	G	0,02330	44
132	M/4	10	7,5	1735	41,3	25,8	12,9	10,3	0,84	87	2,9	3,2	6,3	H	0,03170	55
160	M/4	15	11	1770	59,3	35,8	17,9	14,5	0,85	90,7	2,9	3,8	8,2	H	0,05000	78
160	L/4	20	15	1760	81,4	48,4	24,2	19,3	0,87	89,4	2,9	3,9	8,5	K	0,06700	93
180	MX/4	25	18,5	1760	100	59	29,5	23,6	0,87	90,5	3,4	4,3	8,8	J	0,08000	107
180	LX/4	30	22	1765	119	74,4	37,2	29,76	0,80	92,8	3,6	4,4	8,9	H	0,09200	122

* Version B5, without options

** $S_F = 1,0$ Standard $S_F = 1,15$

Type Plates

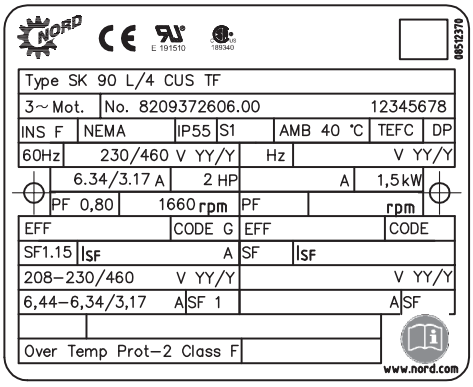

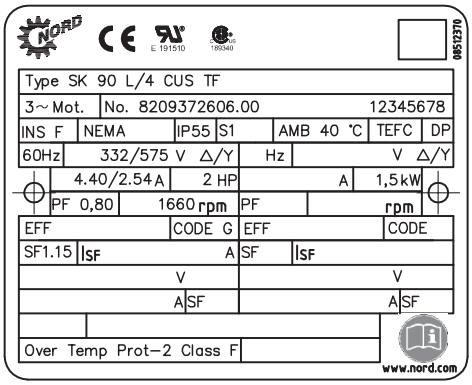

3000 1/min 230/400 V & 400/690 V
50 Hz 2 - polig

T_{amb} -20 ... +45°C

Type		P_N S1, S9 [kW]	n_N [1/min]	I_N 400 V [A]	cos φ	η 4/4 P_N [%]	M_N [Nm]	M_A/M_N	M_K/M_N	I_A/I_N	J [kg m²]	kg * [kg]
63	S/2	0,18	2715	0,52	0,84	59,5	0,63	2,5	2,5	3,4	0,00021	3,6
63	L/2	0,25	2720	0,7	0,87	59,4	0,88	2,4	2,6	3,5	0,00028	4,2
71	S/2	0,37	2835	1,06	0,75	66,3	1,25	1,9	2,5	4,0	0,00035	5,4
71	L/2	0,55	2825	1,25	0,83	76,3	1,86	2,7	2,7	5,2	0,00046	6,7
80	S/2	0,75	2780	1,73	0,87	71,9	2,58	2,3	2,3	4,8	0,00067	8
80	L/2	1,1	2825	2,48	0,84	76,1	3,72	3,4	3,4	5,6	0,0009	9
90	S/2	1,5	2820	3,14	0,88	78,4	5,08	2,6	2,6	5,2	0,0014	12
90	L/2	2,2	2820	4,5	0,90	78,8	7,45	2,0	2,6	5,9	0,0018	14
100	L/2	3	2860	6,84	0,78	81,1	10,0	2,3	2,6	4,8	0,0028	18
112	M/2	4	2880	7,8	0,87	85,1	13,3	2,5	2,5	5,0	0,0055	26
132	S/2	5,5	2870	11,4	0,82	84,9	18,3	2,3	2,3	4,8	0,01	37
132	SA/2	7,5	2920	14,7	0,85	84,6	24,5	3,4	3,8	6,9	0,013	44
132	M/2	11	2885	19,5	0,92	88,7	36,4	2,0	2,2	5,3	0,019	55

* Version B5, without options

3600 1/min 265/460 V & 460 V D
60 Hz 2 - polig

T_{amb} -20 ... +45°C

Type		P_N S1, S9 [kW]	n_N [1/min]	I_N 460 V [A]	cos φ	η 4/4 P_N [%]	M_N [Nm]	M_A/M_N	M_K/M_N	I_A/I_N	J [kg m²]	kg * [kg]
63	S/2	0,21	3315	0,52	0,84	60,4	0,6	2,4	2,4	3,3	0,00021	3,6
63	L/2	0,29	3320	0,7	0,87	59,8	0,83	2,3	2,5	3,4	0,00028	4,2
71	S/2	0,43	3460	0,94	0,75	65,9	1,02	1,8	2,4	3,8	0,00035	5,4
71	L/2	0,63	3440	1,21	0,83	78,8	1,75	2,6	2,6	5,0	0,00046	6,7
80	S/2	0,86	3380	1,73	0,87	71,8	2,43	2,2	2,2	4,6	0,00067	8
80	L/2	1,27	3390	2,48	0,84	76,6	3,58	3,3	3,3	5,4	0,0009	9
90	S/2	1,73	3385	3,2	0,88	78,1	4,94	2,5	2,5	5	0,0014	12
90	L/2	2,55	3380	4,3	0,9	82,1	7,1	1,9	2,5	5,7	0,0018	14
100	L/2	3,45	3360	6,84	0,78	81,3	9,8	2,2	2,5	4,6	0,0028	18
112	M/2	4,6	3480	7,5	0,87	88,6	12,6	2,4	2,4	4,8	0,0055	26
132	S/2	6,3	3445	12	0,82	80,5	17,5	2,2	2,2	4,6	0,01	37
132	SA/2	8,6	3530	14,7	0,89	82,7	23,2	3,2	3,8	7,2	0,013	44
132	M/2	12,6	3460	20,7	0,92	83,1	34,8	1,9	2,1	5,1	0,019	55

* Version B5, without options

1000 1/min 230/400 V & 400/690 V
50 Hz 6 - polig

T_{amb} -20 ... +45°C

Type		P_N S1, S9 [kW]	n_N [1/min]	I_N 400 V [A]	cos φ	η 4/4 P_N [%]	M_N [Nm]	M_A/M_N	M_K/M_N	I_A/I_N	J [kg m²]	kg * [kg]
63	S/6	0,09	850	0,49	0,67	39,6	1,01	2,0	2,0	1,8	0,00028	4,2
63	L/6	0,12	865	0,65	0,62	43,0	1,32	2,1	2,2	1,9	0,00035	4,9
71	S/6	0,18	910	0,71	0,67	54,6	1,89	2,2	2,3	2,8	0,00091	5,4
71	L/6	0,25	920	0,92	0,67	58,5	2,60	2,5	2,6	3,2	0,0012	6,7
80	S/6	0,37	930	1,22	0,7	62,5	3,80	2,4	2,6	3,7	0,0022	8,9
80	L/6	0,55	920	1,54	0,74	69,7	5,71	1,8	2,0	3,3	0,0028	9,8
90	S/6	0,75	915	2,22	0,73	66,8	7,83	2,2	2,4	3,8	0,0037	12
90	L/6	1,1	910	2,97	0,77	69,4	11,5	1,9	2,2	3,6	0,005	14
100	L/6	1,5	940	3,83	0,74	76,4	15,2	2,4	2,7	4,6	0,010	21
112	M/6	2,2	950	5,4	0,77	76,4	22,1	2,3	2,8	4,7	0,018	31,9
132	S/6	3	965	7,3	0,72	82,4	29,7	1,6	2,2	4,1	0,031	42,7
132	M/6	4	960	9,1	0,76	83,5	39,8	2,2	2,8	5,5	0,038	48,9
132	MA/6	5,5	945	12,4	0,80	80,0	55,6	2,2	3,1	6,0	0,045	56,2

* Version B5, without options

1200 1/min 265/460 V & 460 V D
60 Hz 6 - polig

T_{amb} -20 ... +45°C

Type		P_N S1, S9 [kW]	n_N [1/min]	I_N 460 V [A]	cos φ	η 4/4 P_N [%]	M_N [Nm]	M_A/M_N	M_K/M_N	I_A/I_N	J [kg m²]	kg * [kg]
63	S/6	0,1	1020	0,47	0,67	39,9	0,94	1,9	1,9	1,8	0,00028	4,2
63	L/6	0,14	1060	0,63	0,51	54,8	1,26	2,0	2,1	1,9	0,00035	4,9
71	S/6	0,21	1090	0,62	0,67	54,5	1,58	2,1	2,2	2,7	0,00091	5,4
71	L/6	0,29	1105	0,96	0,67	56,7	2,51	2,4	2,5	3,0	0,0012	6,7
80	S/6	0,43	1105	1,36	0,71	56,0	3,72	2,3	2,5	3,5	0,0022	8,9
80	L/6	0,63	1105	1,6	0,72	68,7	5,44	1,8	1,9	3,2	0,0028	9,8
90	S/6	0,86	1100	2,31	0,73	64,1	7,47	2,1	2,3	3,6	0,0037	12
90	L/6	1,27	1135	2,67	0,68	76,1	9,3	1,8	2,1	3,5	0,005	14
100	L/6	1,73	1130	3,7	0,74	79,4	14,6	2,3	2,6	4,4	0,010	21
112	M/6	2,55	1140	5	0,73	87,1	21,2	2,6	2,7	5,2	0,018	31,9
132	S/6	3,45	1160	7,45	0,72	80,8	28,4	1,5	2,2	3,7	0,031	42,7
132	M/6	4,6	1150	9	0,76	84,5	38,2	2,3	2,8	5,0	0,038	48,9
132	MA/6	6,3	1150	12	0,80	82,5	52,3	2,1	3,1	6,0	0,045	56,2

* Version B5, without options

1500 / 3000 1/min **400 V D/YY**
50 Hz **4 - 2 pole**

switchable poles
S1

Type		P_N [kW]	n_N [1/min]	M_N [Nm]	I_N 400 V [A]	cos φ	η [%]	M_A/M_N	M_K/M_N	I_A/I_N	J [kg m²]	kg * [kg]
63	S/4-2	0,1	1415	0,67	0,64	0,58	38,7	3,3	3,6	2,5	0,00021	3,6
		0,15	2840	0,50	0,73	0,68	43,6	3,1	3,8	2,9		
63	L/4-2	0,15	1400	1,02	0,95	0,57	40,0	2,9	3,1	2,2	0,00028	4,2
		0,19	2850	0,64	0,95	0,66	43,7	3,3	4,0	2,9		
71	S/4-2	0,21	1410	1,42	0,66	0,73	63,2	2,1	2,3	3,6	0,00072	5,4
		0,28	2780	0,96	0,80	0,86	58,6	2,5	2,7	3,9		
71	L/4-2	0,3	1385	2,07	0,98	0,75	59,2	2,1	2,1	3,3	0,00086	6,3
		0,45	2715	1,58	1,30	0,88	56,7	1,6	1,9	3,4		
80	S/4-2	0,48	1390	3,30	1,30	0,77	68,9	1,7	1,8	3,3	0,0011	8
		0,6	2785	2,06	1,66	0,82	63,9	1,8	2,0	3,6		
80	L/4-2	0,7	1355	4,93	1,85	0,79	69,9	1,6	1,7	3,3	0,0015	9
		0,85	2770	2,93	2,34	0,80	65,5	2,0	2,0	3,6		
90	S/4-2	1,1	1400	7,50	2,68	0,84	70,8	1,5	2,1	3,9	0,0024	12
		1,4	2780	4,81	3,50	0,88	66,0	1,6	2,1	3,9		
90	L/4-2	1,5	1380	10,38	3,50	0,81	76,0	2,0	2,1	3,9	0,0031	14
		1,9	2775	6,54	4,70	0,82	70,8	2,3	2,3	4,2		
100	L/4-2	2	1400	13,64	4,60	0,75	83,7	1,7	2,0	3,7	0,0045	18
		2,4	2830	8,10	5,50	0,85	74,1	2,0	2,2	4,5		
100	LA/4-2	2,6	1380	17,99	5,62	0,87	76,4	1,8	2,1	3,9	0,0060	21
		3,1	2825	10,48	6,71	0,88	76,0	2,1	2,2	4,9		
112	M/4-2	3,7	1435	24,62	7,90	0,84	80,2	1,9	2,6	4,9	0,012	31,9
		4,4	2905	14,46	9,60	0,83	80,0	2,4	3,0	6,0		
132	S/4-2	4,7	1465	30,64	9,30	0,84	87,4	1,9	2,5	4,9	0,023	44
		5,9	2905	19,39	12,0	0,88	80,3	2,3	2,7	5,8		
132	M/4-2	6,5	1450	42,81	13,0	0,83	87,0	2,2	2,6	5,4	0,032	55
		8	2915	26,21	18,0	0,79	81,2	2,6	2,9	6,2		

* Version B5, without options

Standard CUS - switchable poles

1800 / 3600 1/min **230/460/575 V**
60 Hz **4 - 2 pole**

switchable poles CUS
S1

Type	P_N		n_N	M_N	I_N			cos	η	M_A/M_N	M_K/M_N	I_A/I_N	J	kg
					230 V	460 V	575 V	φ						*
	[HP]	[kW]	[1/min]	[Nm]	[A]	[A]	[A]		[%]				[kg m²]	[kg]
63 S/4-2	0,13	0,1	1700	0,56	1,28	0,64	0,51	0,58	33,9	3,7	3,9	2,4	0,00021	3,6
	0,2	0,15	3410	0,42	1,46	0,73	0,58	0,68	38,0	3,4	4,1	2,6		
63 L/4-2	0,2	0,15	1680	0,85	1,90	0,95	0,76	0,57	34,8	3,2	3,5	2,1	0,00028	4,2
	0,25	0,19	3420	0,53	1,90	0,95	0,76	0,66	38,1	3,6	4,4	2,8		
71 S/4-2	0,28	0,21	1690	1,19	1,32	0,66	0,55	0,73	54,8	2,3	2,5	3,5	0,00072	5,4
	0,37	0,28	3335	0,80	1,60	0,80	0,67	0,86	51,1	2,8	3,0	3,7		
71 L/4-2	0,4	0,3	1660	1,73	1,96	0,98	0,82	0,75	51,3	2,3	2,3	3,1	0,00086	6,3
	0,6	0,45	3260	1,32	2,60	1,30	1,09	0,88	49,4	1,7	2,1	3,2		
80 S/4-2	0,65	0,48	1670	2,74	2,60	1,30	1,09	0,77	60,3	1,9	2,2	3,1	0,00109	8
	0,8	0,6	3340	1,72	3,32	1,66	1,39	0,82	55,4	2,0	2,2	3,5		
80 L/4-2	0,95	0,7	1625	4,11	3,68	1,84	1,54	0,79	60,5	1,8	1,9	3,1	0,00145	9
	1,15	0,85	3325	2,44	4,68	2,34	1,95	0,80	57,1	2,2	2,2	3,5		
90 S/4-2	1,5	1,1	1680	6,25	5,36	2,68	2,24	0,84	61,4	1,7	2,3	3,7	0,00235	12
	1,9	1,4	3335	4,01	7,00	3,50	2,92	0,88	57,1	1,8	2,3	3,7		
90 L/4-2	2	1,5	1655	8,65	7,00	3,50	2,92	0,81	66,5	2,2	2,3	3,7	0,00313	14
	2,5	1,9	3390	5,35	9,40	4,70	3,92	0,82	61,9	2,5	2,5	4,0		
100 L/4-2	2,7	2	1680	11,37	9,20	4,60	3,85	0,75	72,8	1,9	2,2	3,6	0,0045	18
	3,2	2,4	3395	6,75	11,00	5,50	4,6	0,85	64,5	2,2	2,4	4,3		
100 LA/4-2	3,5	2,6	1655	15,00	11,24	5,62	4,7	0,87	66,8	2,0	2,3	3,7	0,006	21
	4,2	3,1	3330	8,89	13,42	6,71	5,6	0,88	66,0	2,3	2,4	4,7		
112 M/4-2	5	3,7	1720	20,54	15,80	7,90	6,6	0,84	70,1	2,1	2,9	4,7	0,0119	31,9
	5,9	4,4	3485	12,06	19,20	9,60	8	0,83	69,4	2,6	3,3	5,7		
132 S/4-2	6,3	4,7	1760	25,50	18,60	9,30	7,8	0,84	75,6	2,1	2,8	4,7	0,0233	44
	7,9	5,9	3485	16,17	24,0	12,00	10	0,88	70,2	2,5	3,0	5,6		
132 M/4-2	8,7	6,5	1740	35,67	26,0	13,00	10,9	0,83	75,7	2,4	2,9	5,1	0,0317	55
	10,7	8	3500	21,83	36,0	18,00	15	0,79	70,7	2,9	3,2	5,9		

* Version B5, without options

750 / 3000 1/min **400 V Y/Y**
50 Hz **8 - 2 pole**

switchable poles
S3-40%

Type	P_N [kW]	n_N [1/min]	M_N [Nm]	I_N 400 V [A]	cos φ	η [%]	M_A/M_N	M_K/M_N	I_A/I_N	J [kg m²]	kg [kg]
71 S/8-2 WU	0,045	650	0,66	0,44	0,58	22,2	2,6	2,6	1,3	0,00072	5,4
	0,22	2520	0,83	0,60	0,90	51,2	1,7	1,6	2,5		
71 L/8-2 WU	0,06	655	0,87	0,52	0,60	24,2	2,8	3,0	1,6	0,00086	6,3
	0,3	2450	1,17	0,85	0,93	47,7	1,3	1,8	2,3		
80 S/8-2 WU	0,1	650	1,47	0,70	0,57	31,5	2,0	2,3	1,6	0,0011	8
	0,45	2695	1,59	1,40	0,76	53,1	2,0	2,8	3,1		
80 L/8-2 WU	0,13	585	2,12	0,74	0,70	31,5	1,4	1,5	1,6	0,0015	9
	0,55	2620	2,00	1,47	0,90	52,2	2,1	2,0	3,3		
90 S/8-2 WU	0,2	665	2,87	1,07	0,57	41,2	2,0	2,2	1,8	0,0023	12
	0,8	2770	2,76	2,37	0,74	57,3	2,9	3,1	3,9		
90 L/8-2 WU	0,3	640	4,48	1,31	0,60	48,0	1,7	1,9	1,9	0,0031	14
	1,2	2770	4,14	3,05	0,79	62,6	2,3	2,8	4,2		
100 L/8-2 WU	0,4	685	5,58	1,70	0,58	51,0	2,1	2,2	2,4	0,0045	18
	1,6	2790	5,48	3,62	0,85	65,3	2,2	2,6	3,9		
100 LA/8-2 WU	0,55	680	7,72	2,28	0,56	54,1	1,4	1,7	2,2	0,006	21
	2,2	2810	7,48	4,87	0,83	68,4	1,9	2,0	4,0		
112 M/8-2 WU	0,75	695	10,30	3,05	0,53	58,3	2,2	2,3	2,5	0,0119	30
	3	2875	9,96	6,37	0,83	71,3	2,7	3,5	6,0		
132 S/8-2 WU	1	710	13,45	3,62	0,58	59,8	1,8	2,0	2,6	0,0233	44
	4	2855	13,38	7,83	0,91	70,5	2,3	2,3	4,8		
132 M/8-2 WU	1,4	700	19,10	4,96	0,60	59,1	1,9	2,3	2,8	0,0317	55
	5,5	2825	18,59	10,7	0,93	69,5	2,3	2,5	5,3		

Standard CUS - switchable poles

900 / 3600 1/min **230/460/575 V Y/Y**
60 Hz **8 - 2 pole**

switchable poles CUS
S3-40%

Type	P_N		n_N	M_N	I_N			cos φ	η	M_A/M_N	M_K/M_N	I_A/I_N	J	kg
					230 V	460 V	575 V							
	[HP]	[kW]	[1/min]	[Nm]	[A]	[A]	[A]		[%]				[kg m²]	[kg]
71 S/8-2 WU	0,06	0,045	820	0,52	0,86	0,43	0,36	0,52	25,3	2,30	2,20	1,70	0,00072	5,4
	0,3	0,22	3250	0,65	0,98	0,49	0,40	0,87	64,8	1,40	1,30	2,50		
71 L/8-2 WU	0,08	0,06	820	0,70	1,00	0,50	0,44	0,54	27,9	2,40	2,40	1,90	0,00086	6,3
	0,4	0,3	3260	0,88	1,36	0,68	0,55	0,89	62,3	2,00	2,10	3,00		
80 S/8-2 WU	0,13	0,1	825	1,16	1,36	0,68	0,59	0,50	37,0	1,70	1,50	1,80	0,0011	8
	0,6	0,45	3350	1,28	2,50	1,25	1,12	0,71	63,7	1,40	1,80	3,00		
80 L/8-2 WU	0,17	0,13	650	1,91	1,52	0,76	0,65	0,69	31,2	1,40	1,80	1,80	0,0015	9
	0,74	0,55	3110	1,69	2,66	1,33	1,32	0,88	59,1	2,00	1,80	4,00		
90 S/8-2 WU	0,27	0,2	830	2,30	2,04	1,02	0,88	0,50	49,3	2,20	2,20	2,30	0,0023	12
	1,07	0,8	3400	2,25	4,18	2,09	1,90	0,71	67,7	3,20	3,00	4,40		
90 L/8-2 WU	0,4	0,3	815	3,52	2,42	1,21	1,04	0,53	58,8	2,00	1,40	1,80	0,0031	14
	1,6	1,2	3410	3,36	5,30	2,65	2,41	0,76	74,9	3,30	2,50	4,20		
100 L/8-2 WU	0,54	0,4	845	4,52	3,18	1,59	1,40	0,51	62,0	1,80	2,10	2,40	0,0045	18
	2,15	1,6	3425	4,46	6,24	3,12	2,70	0,84	76,7	2,40	2,50	4,60		
100 LA/8-2 WU	0,75	0,55	845	6,22	4,24	2,12	1,83	0,49	66,5	1,50	1,90	2,40	0,006	21
	3	2,2	3445	6,10	8,34	4,17	3,64	0,81	81,8	2,10	2,20	4,40		
112 M/8-2 WU	1	0,75	850	8,43	5,70	2,85	2,48	0,47	70,4	2,90	2,40	3,30	0,0119	30
	4	3	3495	8,20	10,9	5,43	4,73	0,82	84,7	2,50	3,30	5,70		
132 S/8-2 WU	1,35	1	865	11,04	6,68	3,34	2,87	0,53	71,0	2,60	2,30	2,90	0,0233	44
	5,4	4	3470	11,01	13,7	6,84	5,61	0,91	80,8	2,90	2,40	5,20		
132 M/8-2 WU	1,9	1,4	860	15,55	9,16	4,58	3,89	0,53	72,5	2,50	2,20	3,60	0,0317	55
	7,4	5,5	3455	15,20	18,1	9,07	7,33	0,93	81,9	2,90	2,40	4,70		

Standard $S_F = 1,15$

750 / 1500 1/min **400 V D/YY**
50 Hz **8 - 4 pole**

switchable poles
S1

Type		P_N [kW]	n_N [1/min]	M_N [Nm]	I_N 400 V [A]	cos φ	η [%]	M_A/M_N	M_K/M_N	I_A/I_N	J [kg m²]	kg * [kg]
71	S/8-4	0,12	670	1,71	0,76	0,70	32,6	1,4	1,5	1,9	0,00091	5,4
		0,18	1350	1,27	0,57	0,82	55,7	1,4	1,5	3,2		
71	L/8-4	0,18	620	2,77	0,92	0,78	36,9	1,6	1,7	2,0	0,0012	6,7
		0,25	1410	1,69	0,64	0,82	68,5	1,8	2,0	3,9		
80	S/8-4	0,25	690	3,46	1,20	0,60	38,8	1,5	1,7	2,6	0,0022	8,9
		0,37	1400	2,52	1,20	0,71	62,8	1,5	1,6	3,8		
80	L/8-4	0,37	680	5,20	1,71	0,76	41,1	1,7	1,9	2,3	0,0028	9,8
		0,55	1380	3,81	1,43	0,76	73,1	1,8	2,0	3,8		
90	S/8-4	0,4	700	5,46	1,81	0,80	39,9	1,6	1,7	2,7	0,0037	12
		0,75	1380	5,19	2,00	0,82	66,0	1,5	1,9	3,6		
90	L/8-4	0,55	700	7,50	2,47	0,70	45,9	1,8	2,0	3,1	0,05	14
		1	1400	6,82	2,47	0,78	75,0	1,6	1,8	3,9		
100	L/8-4	0,7	710	9,41	2,85	0,75	47,3	1,7	1,9	3,3	0,045	18
		1,4	1400	9,55	3,61	0,75	74,7	1,4	1,5	3,8		
100	LA/8-4	1	690	13,84	3,42	0,61	61,5	1,4	2,1	2,5	0,006	21
		1,6	1400	10,91	3,90	0,89	73,6	1,4	2,2	4,2		
112	M/8-4	1,5	700	20,46	5,23	0,61	51,7	1,6	1,8	3,6	0,018	31,9
		2,5	1410	16,93	5,23	0,85	81,3	1,5	1,7	4,0		
132	S/8-4	2,2	725	28,98	7,70	0,54	76,5	2,2	2,8	4,5	0,031	42,7
		3,4	1455	22,31	7,20	0,82	83,9	2,2	3,0	6,5		
132	M/8-4	2,9	730	37,94	10,20	0,50	81,4	2,1	3,2	3,7	0,045	48,9
		4,4	1460	28,78	9,4	0,83	81,2	2,2	3,3	6,0		

* Version B5, without options

Standard
Single phase motors

1500 1/min **230 V**
50 Hz **4 pole**

Standard EHB1 - Single phase motor with capacitor
S1

Type	P_N [kW]	n_N [1/min]	M_N [Nm]	I_N [A]	cos φ	M_A/M_N	M_K/M_N	I_A/I_N	J [kg m²]	kg * [kg]
63 L/4 EHB1	0,12	1405	0,82	1,22	0,95	0,9	2,3	2,5	0,00028	4,5
63 LA/4 EHB1	0,18	1405	1,22	1,71	0,91	1,0	2,1	2,6	0,00035	5,2
71 L/4 EHB1	0,25	1430	1,67	1,96	0,95	0,6	2,2	3,4	0,00086	6,6
71 LA/4 EHB1	0,37	1425	2,48	2,9	0,9	0,7	2,2	3,5	0,00115	8,1
80 L/4 EHB1	0,55	1440	3,65	3,87	0,9	0,3	2,2	3,9	0,00145	9,3
80 LA/4 EHB1	0,75	1435	4,99	5,1	0,9	0,4	1,9	3,5	0,00195	10,5
90 L/4 EHB1	1,1	1445	6,61	7,54	0,87	0,2	2,0	4,2	0,00313	14,4
90 LB/4 EHB1	1,5	1425	10,05	9,02	0,94	0,3	1,9	4,0	0,00391	17,2

Standard EAR1 - Single phase motor with operational and start-up capacitor
S1

Type	P_N [kW]	n_N [1/min]	M_N [Nm]	I_N [A]	cos φ	M_A/M_N	M_K/M_N	I_A/I_N	J [kg m²]	kg * [kg]
63 L/4 EAR1	0,12	1405	0,82	1,22	0,95	2,3	2,3	3,2	0,00028	4,5
63 LA/4 EAR1	0,18	1405	1,22	1,71	0,91	2,4	2,1	3,2	0,00035	5,2
71 L/4 EAR1	0,25	1430	1,67	1,96	0,95	2,1	2,2	4,1	0,00063	6,6
71 LA/4 EAR1	0,37	1425	2,48	2,9	0,9	2,1	2,2	4,6	0,00076	8,1
80 L/4 EAR1	0,55	1440	3,65	3,87	0,9	2,1	2,2	4,3	0,00145	9,3
80 LA/4 EAR1	0,75	1435	4,99	5,1	0,9	2,2	1,9	4,3	0,00165	10,5
90 L/4 EAR1	1,1	1445	6,61	7,54	0,87	2,2	2,0	4,8	0,00235	14,4
90 LB/4 EAR1	1,5	1425	10,05	9,02	0,94	2,2	1,9	5,3	0,00313	17,2

Standard EST - Single phase motor with Steinmetz circuit
S1

Type	P_N [kW]	n_N [1/min]	M_N [Nm]	I_N [A]	cos φ	η [%]	M_A/M_N	M_K/M_N	I_A/I_N	J [kg m²]	kg * [kg]
63 S/4 EST	0,09	1390	0,62	0,97	0,98	41,2	0,8	1,9	1,6	0,00021	3,9
63 L/4 EST	0,12	1405	0,82	1,19	0,98	44,7	0,7	2,2	1,9	0,00028	4,5
71 S/4 EST	0,18	1425	1,21	1,54	0,98	51,9	0,7	2,0	2,5	0,00072	5,7
71 L/4 EST	0,25	1420	1,68	1,94	0,98	57,2	0,5	1,9	2,7	0,00086	6,6
80 S/4 EST	0,37	1425	2,48	2,62	0,96	64,0	0,4	1,5	2,6	0,00109	8,3
80 L/4 EST	0,55	1420	3,70	3,6	0,96	69,2	0,5	1,3	2,6	0,00145	9,3
90 S/4 EST	0,75	1435	4,99	4,6	0,96	73,8	0,4	1,6	3,6	0,00235	12,4
90 L/4 EST	1,1	1435	7,32	6,46	0,96	77,1	0,3	1,6	3,4	0,00313	14,4

* Version B5, without options

1800 1/min **115/230 V**
60 Hz **4 pole**

Standard CUS / ECR - Single phase motor with operational and start-up capacitor S1

Type	P_N		S_F	n_N		M_N		I_N		cos φ		M_A/M_N		M_K/M_N		I_A/I_N		J	kg
				115V	230V	115V	230V	115V	230V	115V	230V	115V	230V	115V	230V	115V	230V		*
	[HP]	[kW]		[1/min]		[Nm]		[A]										[kg m²]	[kg]
63 LA/4 ECR	0,16	0,12	1,35	1740	1740	0,66	0,66	3,3	1,57	0,66	0,7	2,5	2,5	3,5	3,6	3,4	3,6	0,00035	5,2
71 L/4 ECR	0,25	0,18	1,35	1760	1750	0,98	0,98	3,46	1,89	0,89	0,92	2,1	2,4	3,3	3,3	4,5	5,2	0,00086	6,6
71 LA/4 ECR	0,33	0,25	1,35	1750	1750	1,36	1,36	5,4	2,65	0,69	0,71	2,1	2,2	3,0	2,9	4,5	4,7	0,00115	8,1
80 L/4 ECR	0,5	0,37	1,35	1765	1765	2,00	2,00	6,55	3,4	0,8	0,79	2,4	2,2	3,4	3,3	5,6	5,7	0,00145	9,3
80 LA/4 ECR	0,75	0,55	1,35	1760	1760	2,98	2,98	9,4	4,7	0,71	0,72	2,6	2,7	2,9	2,8	5,1	5,2	0,00195	10,5
90 L/4 ECR	1	0,75	1,35	1770	1770	4,05	4,05	11,85	5,94	0,79	0,78	2,3	2,3	2,9	3,1	6,3	6,8	0,00313	14,4
90 LB/4 ECR	1,5	1,1	1,35	1765	1760	5,95	5,97	15,25	7,62	0,85	0,84	2,0	2,1	2,8	2,9	5,7	6,5	0,00391	17,2
90 LX/4 ECR	2	1,5	1,2		1735		8,26		10,4		0,83		1,5		2,3		5,2	0,00391	17,2

* Version B5, without options

1800 1/min **230 V**
60 Hz **4 pole**

Standard CUS / EST - Single phase motor with Steinmetz circuit S1

Type	P_N	n_N	M_N	I_N	cos φ	η	M_A/M_N	M_K/M_N	I_A/I_N	J	kg
											*
	[kW]	[1/min]	[Nm]	[A]		[%]				[kg m²]	[kg]
63 S/4 EST	0,09	1665	0,52	0,96	0,98	41,6	0,9	1,9	1,8	0,00021	3,9
63 L/4 EST	0,12	1695	0,68	1,2	0,98	44,4	0,8	2,0	1,9	0,00028	4,5
71 S/4 EST	0,18	1710	1,01	1,63	0,98	49,0	0,6	2,1	2,1	0,00063	5,7
71 L/4 EST	0,25	1700	1,40	2,09	0,98	53,1	0,6	1,8	2,3	0,00076	6,6
80 S/4 EST	0,37	1720	2,05	2,38	0,98	69,0	0,2	1,3	2,4	0,00128	8,3
80 L/4 EST	0,55	1700	3,09	3,49	0,98	69,9	0,3	1,3	2,2	0,00165	9,3
90 S/4 EST	0,75	1730	4,14	4,62	0,98	72,0	0,4	1,5	3,1	0,00235	12,4
90 L/4 EST	1,1	1725	6,09	6,31	0,98	77,3	0,1	1,4	3,2	0,00313	14,4

* Version B5, without options

1500 1/min — 230/400 V & 400/690 V
50 Hz — 4 - pole

IE2
S1

Type	P_N	n_N	M_N	I_N		cos	η			η 1)	M_A/M_N	M_K/M_N	I_A/I_N	J	kg
				230/400 V	400/690 V	φ	1/2 P_N	3/4 P_N	4/4 P_N	4/4 P_N					*
	[kW]	[1/min]	[Nm]	[A]	[A]		[%]	[%]	[%]	[%]				[kg m²]	[kg]
80 SH/4	0,55	1420	3,73	2,44/1,41	1,41/0,81	0,70	77,7	80,7	80,8	80,4	3,1	3,2	5,1	0,0014	9
80 LH/4	0,75	1415	5,06	3,05/1,76	1,76/1,02	0,75	81,6	83,0	82,4	81,6	3,0	3,1	5,2	0,0019	10,2
90 SH/4	1,1	1435	7,32	4,19/2,42	2,42/1,4	0,80	80,9	82,0	81,8	81,4	3,1	3,5	6,1	0,0034	15,1
90 LH/4	1,5	1415	10,1	5,8/3,34	3,34/1,93	0,79	81,3	82,4	82,8	82,8	3,3	3,5	5,8	0,0039	16,8
100 LH/4	2,2	1445	14,5	8,1/4,65	4,65/2,68	0,79	85,2	86,7	86,6	85,3	3,7	4,3	7,3	0,0075	25,2
100 AH/4	3	1425	20,3	11,4/6,59	6,59/3,8	0,77	86,4	86,7	85,6	85,5	3,1	3,5	6,3	0,0075	25,2
112 MH/4	4	1440	26,6	13,9/8,02	8,02/4,63	0,83	87,4	87,6	86,7	86,6	3,1	3,6	7,5	0,014	35,5
132 SH/4	5,5	1460	36,0	18,5/10,7	10,7/6,18	0,84	87,6	88,5	88,2	87,7	3,1	3,5	7,5	0,032	55
132 MH/4	7,5	1460	49,1	26/15	15/8,7	0,81	88,5	89,5	89,3	88,7	3,3	3,9	7,5	0,035	62
132 LH/4	9,2	1450	60,6	34,0/19,6	19,6/11,3	0,77	87,6	89,7	89,3	η 2)	3,4	3,8	7,4	0,035	62
160 SH/4	9,2	1465	59,8	29,4/17	17/9,8	0,87	90,3	90,9	90,5	90,2	3,3	3,6	8,2	0,067	93
160 MH/4	11	1465	71,7	35,7/20,6	20,6/11,9	0,86	90,8	91,3	91,2	90,9	2,9	3,4	7,4	0,067	93
160 LH/4	15	1465	97,8	47,6/27,5	27,5/15,9	0,87	91,7	92,4	92,0	91,7	3,0	3,5	7,9	0,092	122
180 MH/4	18,5	1475	120	59,9/34,6	34,6/20,0	0,84	92,2	92,6	92,2	92,0	2,9	3,2	7,7	0,13	137
180 LH/4	22	1475	143	69,8/40,3	40,3/23,3	0,86	92,7	92,9	92,2	91,9	2,8	3,1	7,7	0,16	155
200 XH/4	30	1470	195	102,2/59	59/34,1	0,80	92,8	92,8	92,4	92,3	2,8	3,1	7,1	0,16	155

1800 1/min — 265/460 V & 460 V D
60 Hz — 4 - pole

IE2
S1

Type	P_N	n_N	M_N	I_N		cos	η			η 1)	M_A/M_N	M_K/M_N	I_A/I_N	J	kg
				265/460 V	460 V	φ	1/2 P_N	3/4 P_N	4/4 P_N	4/4 P_N					*
	[kW]	[1/min]	[Nm]	[A]	[A]		[%]	[%]	[%]	[%]				[kg m²]	[kg]
80 SH/4	0,55	1730	3,03	2,15/1,24	1,24	0,66	77,6 **	81,6 **	82,7 **	82,4 **	3,7	3,9	6,1	0,0014	9
80 LH/4	0,75	1730	4,14	2,7/1,56	1,56	0,72	81,9	84,4	84,9	84,4	3,4	3,9	6,5	0,0019	10,2
90 SH/4	1,1	1745	6,02	3,72/2,15	2,15	0,76	80,1	83,2	84,0	84,0	3,7	4,3	7,4	0,0034	15,1
90 LH/4	1,5	1725	8,3	5,12/2,95	2,95	0,76	81,5	83,7	84,4	84,0	4,1	4,1	6,8	0,0039	16,8
100 LH/4	2,2	1755	12,0	7,2/4,16	4,16	0,76	84,8	87,2	87,8	87,5	4,0	4,9	8,2	0,0075	25,2
100 AH/4	3	1740	16,5	9,84/5,68	5,68	0,75	87,3	88,5	88,2	87,9	3,6	4,3	7,7	0,0075	25,2
112 MH/4	4	1750	21,9	12,1/6,98	6,98	0,81	87,1	88,5	88,4	88,2	3,6	4,3	8,2	0,014	35,5
132 SH/4	5,5	1765	29,8	16,2/9,34	9,34	0,82	87,9	89,3	89,5	89,5	3,9	4,2	8,7	0,032	55
132 MH/4	7,5	1765	40,6	22,7/13,1	13,1	0,79	88,0	89,8	90,2	89,5	4,1	4,4	8,8	0,035	62
132 LH/4	9,2	1755	50,1	29,1/16,8	16,8	0,76	88,7	90,0	90,0	η 2)	4,1	4,7	8,2	0,035	62
160 SH/4	9,2	1770	49,6	26/15	15	0,85	88,9	90,7	91,1	91,0	3,9	4,2	9,7	0,067	93
160 MH/4	11	1770	59,6	31,2/18,0	18	0,84	90,0	91,4	91,7	91,6	3,2	3,8	8,7	0,067	93
160 LH/4	15	1765	81,3	41,6/24,0	24	0,88	91,0	92,4	92,6	92,4	3,5	4,2	8,8	0,092	122
180 MH/4	18,5	1780	99	52,0/30,0	30	0,84	91,8	92,7	92,7	92,4	3,5	3,6	8,5	0,13	137
180 LH/4	22	1780	118	60,6/35,0	35	0,85	92,4	93,1	92,9	92,4	3,6	3,6	8,3	0,16	155
200 XH/4	30	1775	161	88,0/51,0	51	0,80	93,2	93,5	93,1	93,0	3,2	3,3	8,0	0,16	155

η 1) worst value in the long range limit η 2) Motor without wide voltage range ⇨ 🕮 A22 - Extended operation range

* Version B5, without options

** There are no standard specifications for 60Hz

1800 1/min **230/460/575 V**
60 Hz **4 - pole**

CUS - High Efficiency (EISAct)
S1

Type	P_N **		n_N	M_N	I_N			cos	η	M_A/M_N	M_K/M_N	I_A/I_N	Codeletter	J	kg
					230 V	460 V	575 V	φ					⇨ 📖A28		*
	[HP]	[kW]	[1/min]	[Nm]	[A]	[A]	[A]		[%]					[kg m²]	[kg]
80 LH/4	1	0,75	1750	4,09	3,88	1,94	1,5	0,59	82,5	4,6	4,3	6,0	K	0,0019	10,2
90 SH/4	1,5	1,1	1740	6,04	4,3	2,15	1,75	0,76	84	3,5	3,8	6,3	L	0,0034	15,1
90 LH/4	2	1,5	1745	8,21	6,3	3,15	2,45	0,71	84	4,3	4,5	6,7	K	0,0039	16,8
100 LH/4	3	2,2	1765	11,9	8,6	4,3	3,4	0,73	87,5	3,6	4,7	7,9	L	0,0075	25,2
112 MH/4	5	3,7	1770	20,0	14,4	7,2	5,6	0,74	87,5	4,0	4,8	8,1	L	0,0128	35,5
132 SH/4	7,5	5,5	1780	29,5	20,9	10,5	8,3	0,74	89,5	4,3	4,6	8,2	M	0,0317	55
132 MH/4	10	7,5	1770	40,5	27	13,5	10,8	0,78	89,5	3,2	4,0	7,4	M	0,0354	62
160 MH/4	15	11	1770	59,35	36	18	14,4	0,84	91,7	3,2	3,8	8,7	K	0,067	93
160 LH/4	20	15	1775	80,70	48	24	19,2	0,84	92,6	3,5	4,2	8,8	M	0,092	122
180 MH/4	25	18,5	1780	99,2	60	30	24	0,84	92,4	3,5	3,6	8,5	K	0,13	137
180 LH/4	30	22	1780	118,0	70	35	28	0,85	92,4	3,6	3,6	8,3	K	0,16	155

* Version B5, without options
** SF=1,15

Type Plate (Geared motor)
IE2 S1

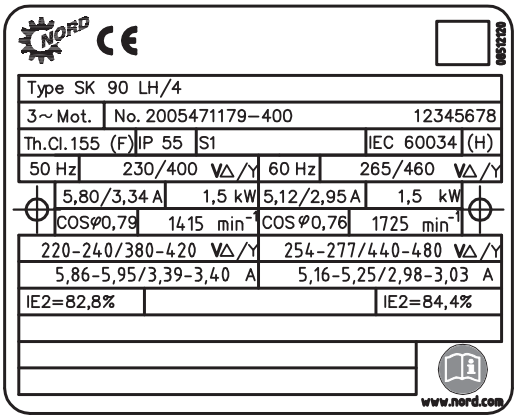

Type Plate (IEC-motor)
IE2 S1

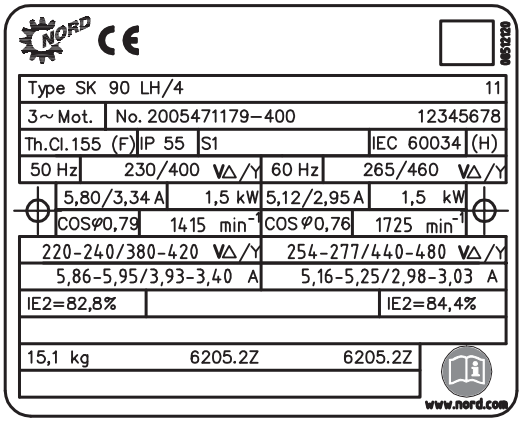

High Efficiency S1

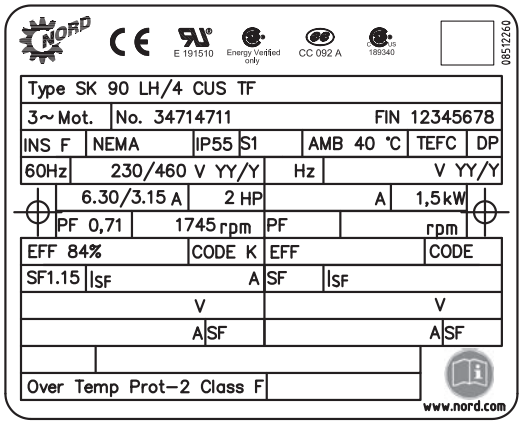

High Efficiency S1

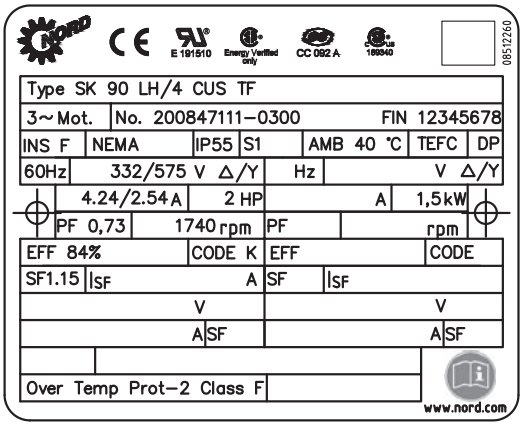

3000 1/min **230/400/690 V**
50 Hz **2 - polig**

IE2
S1

Type		P_N	n_N	M_N	I_N			cos φ	η	M_A/M_N	M_K/M_N	I_A/I_N	J	kg *
					230 V	400 V	690 V							
		[kW]	[1/min]	[Nm]	[A]	[A]	[A]		[%]				[kg m²]	[kg]
80	SH/2	0,75	2790	2,6	2,86	1,65	0,95	0,83	78,2	2,8	3,1	5,3	0,00067	8
80	LH/2	1,1	2820	3,7	4,04	2,34	1,35	0,82	80,6	3,5	3,6	6,2	0,00089	9
90	SH/2	1,5	2845	5,0	5,47	3,16	1,82	0,84	82,6	3,0	3,3	6,0	0,0014	12
90	LH/2	2,2	2840	7,4	7,45	4,30	2,48	0,90	84,7	3,5	3,7	6,9	0,0020	15
100	LH/2	3	2880	9,9	9,87	5,70	3,29	0,88	87,3	3,3	4,2	7,7	0,0037	21
112	MH/2	4	2905	13,1	12,9	7,43	4,29	0,88	87,7	3,3	3,8	7,9	0,0069	28
132	SH/2	5,5	2925	18,0	17,3	10,00	5,77	0,90	88,6	3,1	3,7	8,0	0,013	42
132	RH/2	7,5	2940	24,3	23,2	13,4	7,72	0,91	89,0	3,2	3,8	8,1	0,019	55

* Version B5, without options

Type Plate

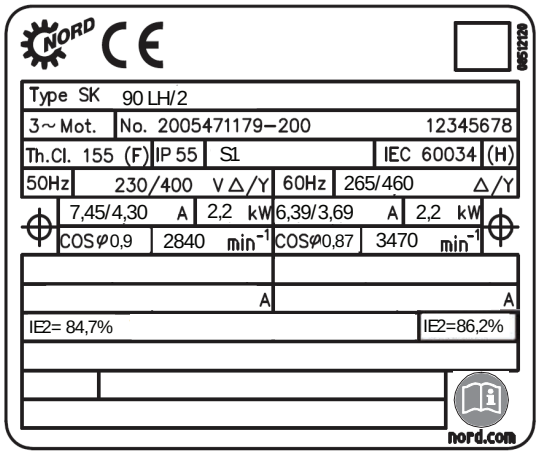

3600 1/min **230/460/575 V**
60 Hz **2 - polig**

IE2
S1

Type		P_N	n_N	M_N	I_N			cos φ	η	M_A/M_N	M_K/M_N	I_A/I_N	J	kg
					230 V	460 V	575 V							*
		[kW]	[1/min]	[Nm]	[A]	[A]	[A]		[%]				[kg m²]	[kg]
80	SH/2	0,75	3430	2,1	2,84	1,42	1,14	0,82	79,9	3,5	3,8	6,7	0,00067	8
80	LH/2	1,1	3450	3,0	4,08	2,04	1,63	0,80	82,5	4,2	4,4	7,0	0,00089	9
90	SH/2	1,5	3465	4,1	5,42	2,71	2,17	0,83	84,6	4,0	4,3	7,5	0,0014	12
90	LH/2	2,2	3470	6,1	7,38	3,69	2,95	0,87	86,2	4,4	4,5	8,6	0,0020	15
100	LH/2	3	3500	8,2	9,80	4,90	3,92	0,87	87,8	3,3	4,8	8,7	0,0037	21
112	MH/2	4	3520	10,9	13,2	6,61	5,29	0,88	87,8	3,8	4,4	8,9	0,0069	28
132	SH/2	5,5	3540	14,8	17,4	8,68	6,94	0,89	88,8	3,5	4,0	8,8	0,013	42
132	RH/2	7,5	3545	20,2	22,9	11,5	9,18	0,91	89,9	3,6	4,2	8,8	0,019	55

* Version B5, without options

IE2 - AR (ALTO Rendimento - Brazil)

1800 1/min **220/380 V & 440 V**
60 Hz **4 - pole**

AR S1		220/380 V						440 V									
Type	P_N	n_N	M_N	I_N 220 V	I_N 380 V	cos φ	η	n_N	M_N	I_N 440 V	cos φ	η	M_A/M_N @220/380V	M_K/M_N @220/380V	I_A/I_N @220/380V	J	kg *
	[kW]	[1/min]	[Nm]	[A]	[A]		[%]	[1/min]	[Nm]	[A]		[%]				[kg m²]	[kg]
80 LH/4	0,75	1679	4,3	2,99	1,72	0,81	84,4	1718	4,2	1,56	0,76	84,6	2,3	2,6	4,8	0,0019	10,2
90 SH/4	1,1	1710	6,1	4,00	2,31	0,85	84,3	1735	6,1	2,13	0,78	85,9	2,5	2,9	5,6	0,0034	15,1
90 LH/4	1,5	1700	8,4	5,54	3,20	0,84	84,4	1730	8,3	3,0	0,77	85,8	2,8	3,3	5,8	0,0039	16,8
100 LH/4	2,2	1725	12,2	7,83	4,52	0,84	87,3	1745	12,0	4,2	0,78	88,3	2,7	3,3	6,2	0,0075	25,2
100 AH/4	3	1725	16,6	11,3	6,50	0,80	87,9	1745	16,4	6,8	0,66	88,2	2,8	3,3	6,4	0,0075	25,2
112 MH/4	3,7	1735	20,4	13,2	7,60	0,84	88,2	1755	20,1	7,1	0,77	89,4	3,1	3,7	7,4	0,0140	35,5
112 MH/4	4,5	1730	24,8	15,5	8,95	0,86	89,0	1750	24,6	8,45	0,78	89,9	2,8	3,3	6,8	0,0140	35,5
132 SH/4	5,5	1760	29,8	19,1	11,0	0,84	90,0	1770	29,7	10,5	0,76	90,3	3,3	3,5	7,5	0,0317	55,0
132 MH/4	7,5	1745	41,0	24,8	14,9	0,86	91,3	1760	40,7	13,7	0,79	91,4	3,0	3,3	7,8	0,0354	62,0
160 SH/4	9,2	1765	49,8	30,1	17,4	0,89	91,3	1775	49,5	15,8	0,84	91,7	2,6	2,9	6,9	0,067	93,0
160 MH/4	11	1765	59,5	36,4	21,0	0,88	92,0	1775	59,2	19,2	0,82	92,1	2,6	3,1	7,4	0,067	93,0
160 LH/4	15	1770	80,9	49,4	28,5	0,87	92,7	1775	80,7	26,7	0,8	92,8	3,1	3,7	7,9	0,092	122
180 MH/4	18,5	1780	99,2	61,5	35,5	0,86	92,8	1780	99,2	35	0,75	92,9	3,3	3,4	8,2	0,13	137
180 LH/4	22	1775	118,4	72,2	41,7	0,86	93,3	1782	117,9	39	0,78	93,3	3,0	3,0	8,0	0,16	155

* Version B5, without options

Type Plate

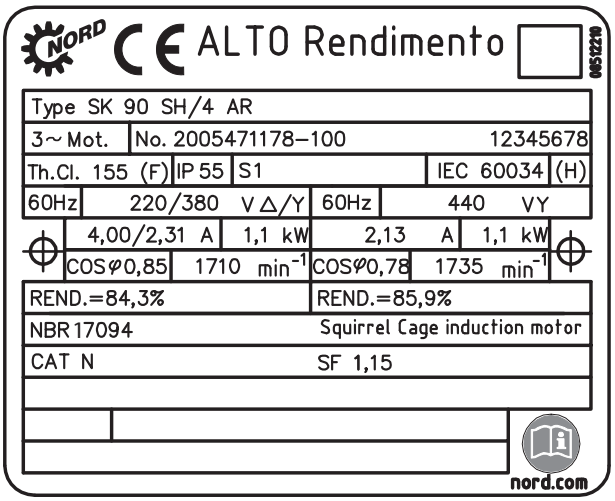

1800 1/min **220/380 V & 440 V**
60 Hz **4 - pole**

KR S1		220/380 V						440 V									
	P_N	n_N	M_N	I_N		cos	η	n_N	M_N	I_N	cos	η	M_A/M_N	M_K/M_N	I_A/I_N	J	kg
Type				220 V	380 V	φ				440 V	φ		@220/380V				*
	[kW]	[1/min]	[Nm]	[A]	[A]		[%]	[1/min]	[Nm]	[A]		[%]				[kg m²]	[kg]
80 LH/4	0,75	1715	4,2	3,06	1,77	0,76	84,4	1740	4,1	1,78	0,65	84,5	2,9	3,3	5,9	0,0019	10,2
90 SH/4	1,1	1710	6,1	4,00	2,31	0,85	84,3	1735	6,1	2,13	0,78	85,9	2,5	2,9	5,6	0,0034	15,1
90 LH/4	1,5	1700	8,4	5,54	3,2	0,84	84,4	1730	8,3	3	0,77	85,8	2,8	3,3	5,8	0,0039	16,8
100 LH/4	2,2	1730	12,1	7,95	4,59	0,81	87,6	1750	12,0	4,48	0,73	88,2	3,1	3,8	7,0	0,0075	25,2
100 AH/4	3	1725	16,6	11,3	6,5	0,80	87,9	1745	16,4	6,8	0,66	88,2	2,8	3,3	6,4	0,0075	25,2
112 MH/4	4	1730	22,1	14,2	8,2	0,85	87,9	1750	21,8	7,5	0,79	89,3	2,9	3,4	6,8	0,0140	35,5
132 SH/4	5,5	1760	29,8	19,1	11	0,84	90	1770	29,7	10,5	0,76	90,3	3,3	3,5	7,5	0,0317	55
132 MH/4	7,5	1745	41,0	24,8	14,9	0,86	91,3	1760	40,7	13,7	0,79	91,4	3,0	3,3	7,8	0,0354	62
160 SH/4	9,2	1765	49,8	30,1	17,4	0,89	91,3	1775	49,5	15,8	0,84	91,7	2,6	2,9	6,9	0.067	93
160 MH/4	11	1765	59,5	36,4	21	0,88	92	1775	59,2	19,2	0,82	92,1	2,6	3,1	7,4	0,067	93
160 LH/4	15	1770	80,9	49,4	28,5	0,87	92,7	1775	80,7	26,7	0,8	92,8	3,1	3,7	7,9	0,092	122
180 MH/4	18,5	1780	99,2	61,5	35,5	0,86	92,5	1780	99,2	35	0,75	92,9	3,3	3,4	8,2	0,13	137
180 LH/4	22	1780	118,0	71,9	41,5	0,87	92,4	1780	118,0	39,4	0,79	92,9	3,3	3,3	7,7	0,16	155

* Version B5, without options

Type Plate

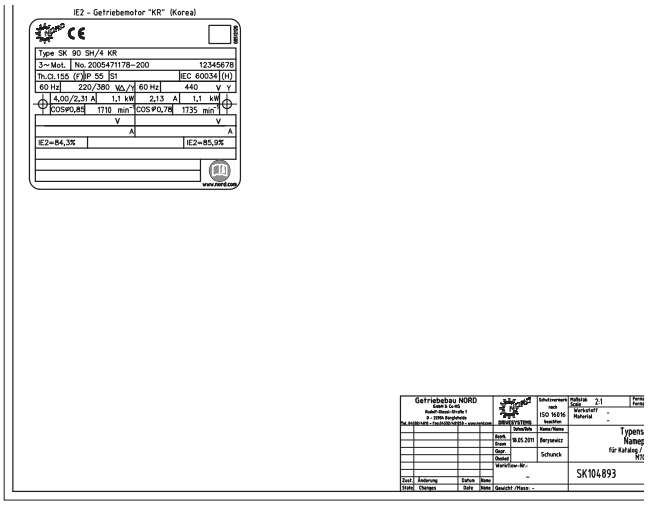

1500 1/min 50 Hz — 230/400 V & 400/690 V — 4 - polig

IE3 S1

Type	P_N [kW]	n_N [1/min]	M_N [Nm]	I_N 230V [A]	I_N 400 V [A]	I_N 690 V [A]	cos φ 4/4 P_N	η 1/2 P_N [%]	η 3/4 P_N [%]	η 4/4 P_N [%]	M_A/M_N	M_K/M_N	I_A/I_N	J [kg m²]	kg * [kg]
80 LP/4	0,75	1415	5,06	3,10	1,79	1,03	0,72	83,7	84,7	83,7	3,0	3,1	5,4	0,0019	10,2
90 SP/4	1,1	1430	7,33	4,12	2,38	1,37	0,78	84,7	86,0	85,3	3,6	4,0	7,0	0,0034	15,1
90 LP/4	1,5	1415	10,1	5,59	3,23	1,86	0,79	86,6	86,3	85,3	3,3	3,5	5,9	0,0039	16,7
100 LP/4	2,2	1465	14,3	7,40	4,27	2,47	0,83	88,7	89,6	88,1	2,6	3,9	8,2	0,0081	28,0
100 AP/4	3	1460	19,7	10,5	6,05	3,49	0,81	88,4	88,8	88,1	2,4	3,6	7,3	0,0081	28,0
112 MP/4	4	1440	26,5	13,5	7,82	4,51	0,83	88,9	89,2	88,6	3,4	3,6	7,5	0,014	35,5
132 SP/4	5,5	1465	36,8	18,9	10,9	6,29	0,80	90,6	91,5	90,9	3,7	4,0	8,6	0,032	55,0
132 MP/4	7,5	1460	49,1	26,0	15,0	8,66	0,80	90,9	91,5	90,9	3,9	4,2	8,2	0,035	62,0
160 MP/4	11	1465	71,8	35,5	20,5	11,8	0,85	91,6	92,0	91,4	2,9	3,4	7,4	0,067	93,0
160 LP/4	15	1465	98,0	48,3	27,9	16,1	0,85	92,3	92,8	92,3	3,8	4,3	9,1	0,092	122
180 MP/4	18,5	1480	119	58,9	34,0	19,6	0,84	92,4	93,1	93,1	2,9	3,4	7,9	0,16	155
180 LP/4	22	1475	143	68,1	39,3	22,7	0,87	93,2	93,5	93,1	2,8	3,2	8,0	0,16	155

1800 1/min 60 Hz — 265/460 V & 460 V D — 4 - polig

IE3 S1

Type	P_N [kW]	n_N [1/min]	M_N [Nm]	I_N 265 V [A]	I_N 460 V [A]	cos φ 4/4 P_N	η 1/2 P_N [%]	η 3/4 P_N [%]	η 4/4 P_N [%]	M_A/M_N	M_K/M_N	I_A/I_N	J [kg m²]	kg * [kg]
80 LP/4	0,75	1730	4,12	2,72	1,57	0,7	84,4	86,1	86,1	3,4	3,8	6,5	0,0019	10,2
90 SP/4	1,1	1740	6,1	3,64	2,10	0,76	84,2	86,5	86,9	4,1	4,9	8,4	0,0034	15,1
90 LP/4	1,5	1730	8,5	4,85	2,80	0,78	86,3	87,4	87	3,8	4,2	7,6	0,0039	16,7
100 LP/4	2,2	1770	11,8	6,7	3,84	0,79	88,2	89,8	90	3,0	4,5	9,2	0,0081	28,0
100 AP/4	3	1765	11,8	8,8	5,1	0,79	88,7	89,9	89,9	3,7	5,7	8,8	0,0081	28,0
112 MP/4	4	1750	21,8	11,9	6,9	0,82	89,2	90,4	90,2	4,7	5,0	10,2	0,014	35,5
132 SP/4	5,5	1770	29,5	16,9	9,8	0,77	90,2	91,5	91,7	4,7	5,0	10,2	0,032	55,0
132 MP/4	7,5	1765	40,2	23,0	13,3	0,77	90,7	91,6	91,7	4,7	5,0	9,6	0,035	62,0
160 MP/4	11	1770	59	30,8	17,8	0,84	91,2	92,5	92,5	3,2	3,8	8,8	0,067	93,0
160 LP/4	15	1775	81	41,2	23,8	0,85	90,9	92,3	93	4,3	4,6	10,8	0,092	122
180 MP/4	18,5	1780	99	52	30,3	0,82	92,5	93,4	93,6	3,4	3,6	8,6	0,16	155
180 LP/4	22	1780	117	60	34,8	0,85	93,6	94	93,6	3,3	3,4	8,8	0,16	155

* Version B5, without options

Type Plate (Geared motor)

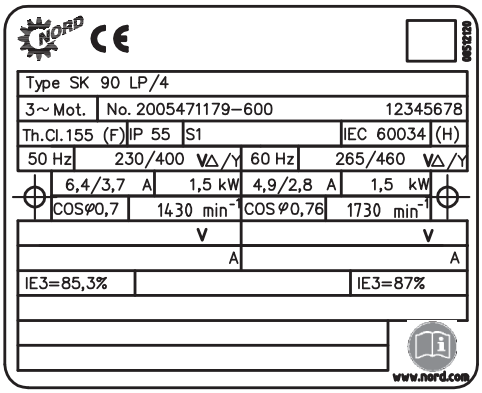

Type Plate (IEC-motor)

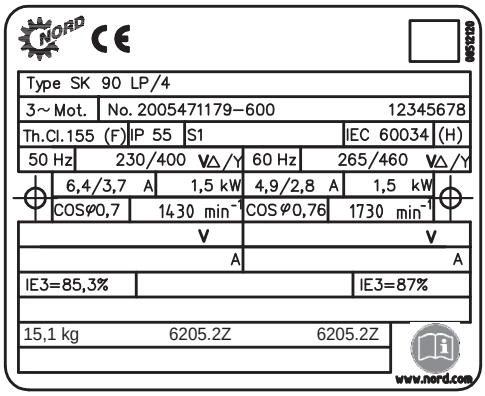

1800 1/min 230/460/575 V
60 Hz 4 - polig

CUS - Premium Efficiency
S1

Type		P_N **		n_N	M_N	I_N			cos φ	η			M_A/M_N	M_K/M_N	I_A/I_N	Codeletter	J	kg
						230 V	460 V	575 V	4/4xP_N	1/2xP_N	3/4xP_N	4/4xP_N				⇨ 📖 A28		*
		[HP]	[kW]	[1/min]	[Nm]	[A]	[A]	[A]		[%]	[%]	[%]					[kgm²]	[kg]
80	LP/4	1	0,75	1730	4,12	3,14	1,57	1,30	0,70	84,4	86,1	86,1	3,4	3,8	6,5	K	0,0019	10,2
90	SP/4	1,5	1,1	1740	6,10	4,20	2,10	1,68	0,76	84,2	86,5	86,9	4,1	4,9	8,4	L	0,0034	15,1
90	LP/4	2	1,5	1730	8,50	5,60	2,80	2,24	0,78	86,3	87,4	87,0	3,8	4,2	7,6	K	0,0039	16,7
100	LP/4	3	2,2	1770	11,8	7,70	3,84	3,07	0,79	88,2	89,8	90,0	3,0	4,5	9,2	L	0,0081	28,0
112	MP/4	5	3,7	1755	20,1	13,0	6,50	5,20	0,80	89,2	90,4	90,3	3,8	4,3	9,1	L	0,014	35,5
132	SP/4	7,5	5,5	1770	29,5	19,5	9,80	7,80	0,77	90,2	91,5	91,7	4,7	5,0	10,2	M	0,032	55,0
132	MP/4	10	7,5	1765	40,2	26,6	13,3	10,6	0,77	90,7	91,6	91,7	4,7	5,0	9,6	M	0,035	62,0
160	MP/4	15	11	1770	59	35,6	17,8	14,2	0,84	91,2	92,5	92,5	3,2	3,8	8,8	K	0,067	93,0
160	LP/4	20	15	1775	81	47,6	23,8	19,0	0,85	90,9	92,3	93,0	4,3	4,6	10,8	M	0,092	122
180	MP/4	25	18,5	1780	99	61	30,3	24,2	0,82	92,5	93,4	93,6	3,4	3,6	8,6	K	0,16	155
180	LP/4	30	22	1780	117	70	34,8	27,8	0,85	93,6	94,0	93,6	3,3	3,4	8,8	K	0,16	155

* Version B5, without options

** SF=1,15

Type Plate

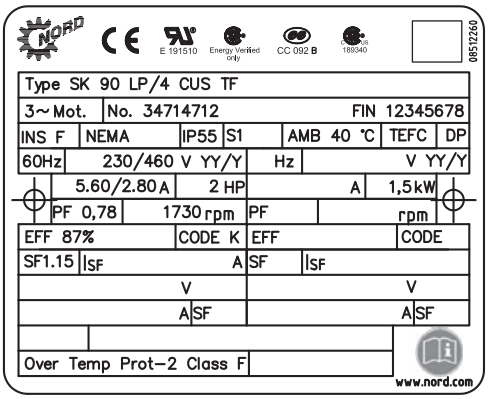

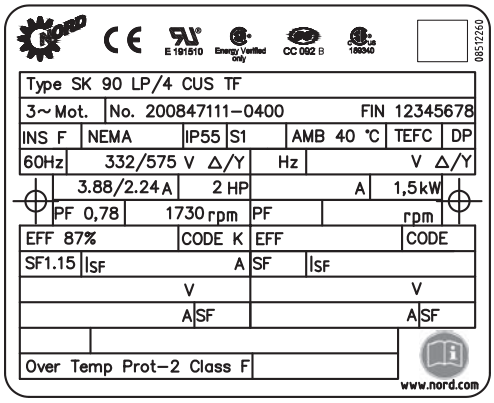

ATEX 2D
ATEX 3D (non-conducting dust)

1500 1/min **230/400 V & 400/690 V** **Ex II 2D IP 66 T 125°C**
50 Hz **4 - polig** **Ex II 3D IP 55 T 125°C**

S1

Type		P_N	n_N	M_N	I_N		cos φ	η	M_A/M_N	M_K/M_N	I_A/I_N	J	kg
					230/400 V	400/690 V		4/4 P_N					*
		[kW]	[1/min]	[Nm]	[A]	[A]		[%]				[kg m²]	[kg]
63	S/4	0,12	1335	0,86	0,95/0,55		0,64	49,9	2,7	2,7	2,9	0,00021	3,6
63	L/4	0,18	1360	1,26	1,18/0,68		0,64	56,2	2,5	2,6	3,30	0,00028	4,2
71	S/4	0,25	1365	1,75	1,30/0,75		0,79	61,3	2,2	2,1	3,75	0,00072	5,4
71	L/4	0,37	1380	2,56	1,89/1,09		0,71	64,4	2	2,4	4,22	0,00086	6,3
80	S/4	0,55	1385	3,79	2,62/1,51		0,75	75,1	1,9	2	4,11	0,00109	8,0
80	L/4	0,75	1395	5,13	3,52/2,03		0,75	75,5	2	2,1	4,17	0,00145	9,0
90	S/4	1,1	1410	7,45	4,78/2,76		0,76	77,6	2,3	2,6	5,26	0,00235	12
90	L/4	1,5	1390	10,30	6,11/3,53		0,78	77,5	2,3	2,6	5,84	0,00313	14
100	L/4	2,2	1415	14,85	8,65/5,00	5,0/2,89	0,78	80,8	2,3	3	5,76	0,0045	18
100	LA/4**	3,0	1415	20,25	11,76/6,80	6,80/3,93	0,78	83,3	2,5	2,9	6,32	0,006	21
112	M/4	4,0	1430	26,71		8,24/4,76	0,83	85,1	2,3	2,8	7,15	0,011	30
132	S/4	5,5	1450	36,22		11,60/6,67	0,80	87,9	2,1	2,7	7,00	0,024	44
132	M/4	7,5	1450	49,39		15,50/8,96	0,79	87,7	2,5	2,8	7,59	0,032	55
132	MA/4**	9,2	1445	60,80		18,80/10,90	0,82	86,9	2,6	3,1	7,19	0,035	62

* Version B5, without options
** different surface temperature T 140°C

Type Plate

ATEX 2D S1

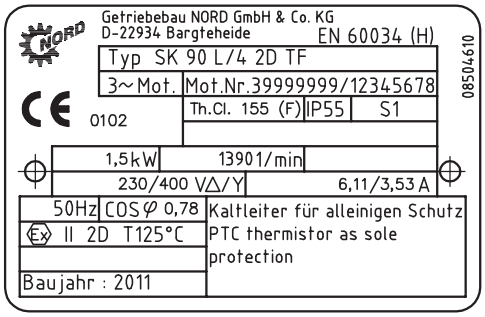

ATEX 3D S1

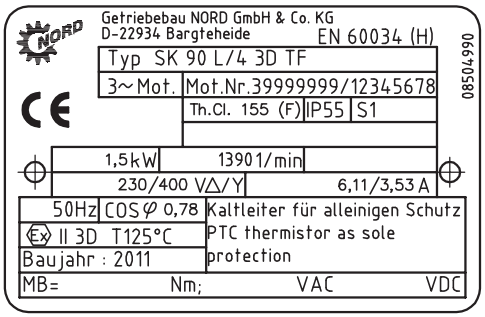

ATEX IE2 3D (non-conducting dust)

1500 1/min **230/400 V & 400/690 V** **Ex II 3D Ex tc III B T 125°C Dc**
50 Hz **4 - polig**

IE2
S1

Type	P_N	n_N	M_N	I_N		cos	η			M_A/M_N	M_K/M_N	I_A/I_N	J	kg
				230/400 V	400/690 V	φ	1/2 P_N	3/4 P_N	4/4 P_N					*
	[kW]	[1/min]	[Nm]	[A]	[A]		[%]	[%]	[%]				[kg m²]	[kg]
80 SH/4	0,55	1415	3,71	2,39/1,38		0,73	77,7	80,7	80,8	3,1	3,2	5,5	0,0014	9,0
80 LH/4	0,75	1410	5,08	3,12/1,80		0,74	81,6	83,0	82,4	3,0	3,1	5,7	0,0019	10,2
90 SH/4	1,1	1430	7,35	4,26/2,46		0,79	80,9	82,0	81,8	3,1	3,5	6,5	0,0034	15,1
90 LH/4	1,5	1420	10,09	5,85/3,38		0,78	81,3	82,4	82,2	3,3	3,5	6,7	0,0039	16,8
100 LH/4	2,2	1445	14,54		4,79/2,76	0,77	85,2	86,7	86,6	3,7	4,3	8,2	0,0075	25,2
100 AH/4	3,0	1420	20,18		6,40/3,69	0,80	86,4	86,7	85,6	3,1	3,5	6,9	0,0075	25,2
112 MH/4	4,0	1440	26,53		8,12/4,69	0,83	87,4	87,6	86,7	3,1	3,6	8,0	0,014	35,5
132 SH/4	5,5	1455	36,10		10,82/6,24	0,83	87,6	88,5	88,2	3,1	3,5	8,1	0,032	55,0
132 MH/4	7,5	1455	49,23		15,08/8,70	0,80	88,5	89,5	89,3	3,3	3,9	8,2	0,035	62,0
160 MH/4	11	1465	71,7		20,5/11,8	0,85	90,8	91,3	91,2	2,9	3,4	9,1	0,067	93,0
160 LH/4	15	1465	97,75		27,5/15,9	0,87	91,7	92,4	92,0	3,0	3,5	9,6	0,092	122
180 MH/4	18,5	1475	120		34,9/20,2	0,84	92,2	92,6	92,2	2,9	3,2	8,3	0,13	137
180 LH/4	22	1475	142		40,8/23,6	0,86	92,7	92,9	92,2	2,8	3,1	8,4	0,16	155

* Version B5, without options

Type Plate

ATEX IE2 3D S1

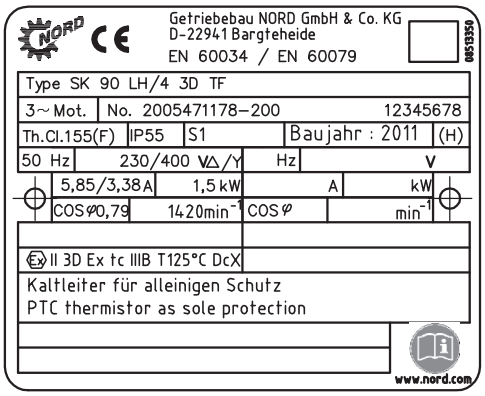

B3

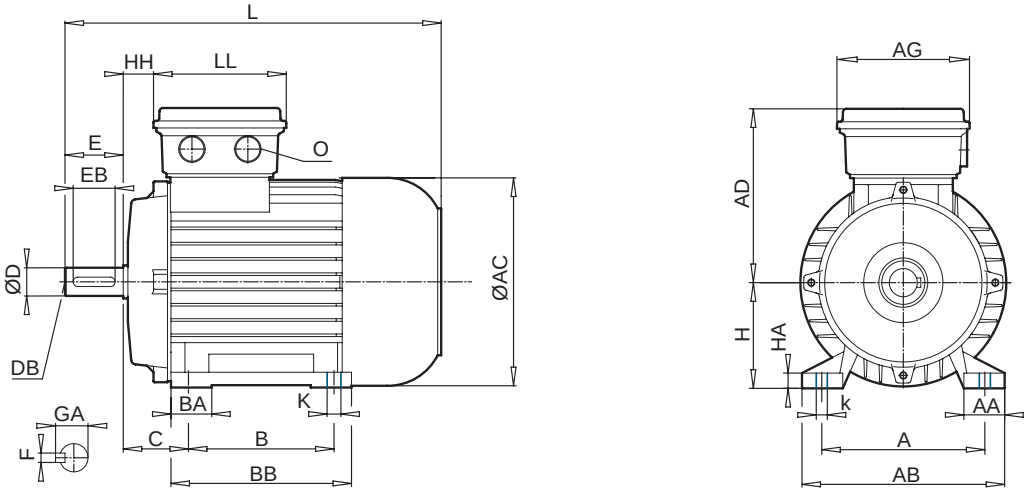

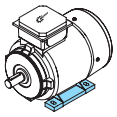

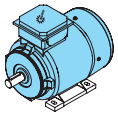

Type																			
	IE1*	IE2	IE3																
			[mm]	A	AA	AB	B	BA	BB	HA	k	K	AC	AD	AG	C	H	HH	L
63	S/L	-	-	100	21	120	80	27	105	9	12	7	123	115	100	40	63	12	215
71	S/L	-	-	112	24	136	90	24	108	10	14	9	138	124	100	45	71	20	244
80	S/L	SH/LH	LP	125	30	160	100	30	125	11	17	9	156	142	114	50	80	22	276
90 90	S L	- SH/LH	- SP/LP	140	34	174	100 125	35	130 155	12	17	9	176	147	114	56	90	26	301 326
100	L/LA	LH/AH	LP/AP	160	37	192	140	30	175	15	22	12	194	169	114	63	100	32	366
112 112	M -	SH MH	- MP	190	40	224	140	34	175	15	22	12	218	179	114	70	112	35	386 411
132 132	S M/MA	- SH/MH/LH	- SP/MP	216	58	260	140 178	37	180 218	18	30	14	258	204	122	89	132	47	453 491
160 160	M L	SH/MH -	MP -	254	72	318	210 254	52	264 308	25	30	14,5	310	242	186	108	160	52	602
160	-	LH	LP	254	72	318	254	52	308	25	30	14,5	310	242	186	108	160	52	646
180 180	- -	MH LH	MP LP	279	88,5	340	241 279	-	281 319	27	30	14,5	348	259	186	121	180	54	724

* + Standard

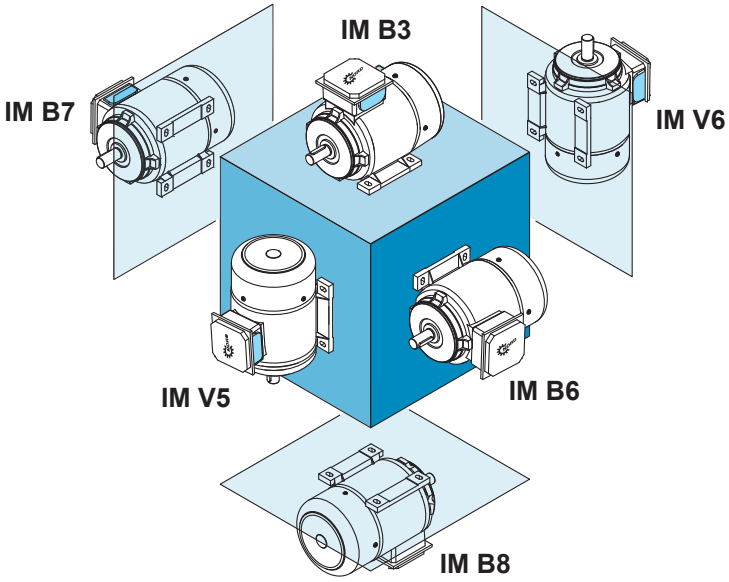

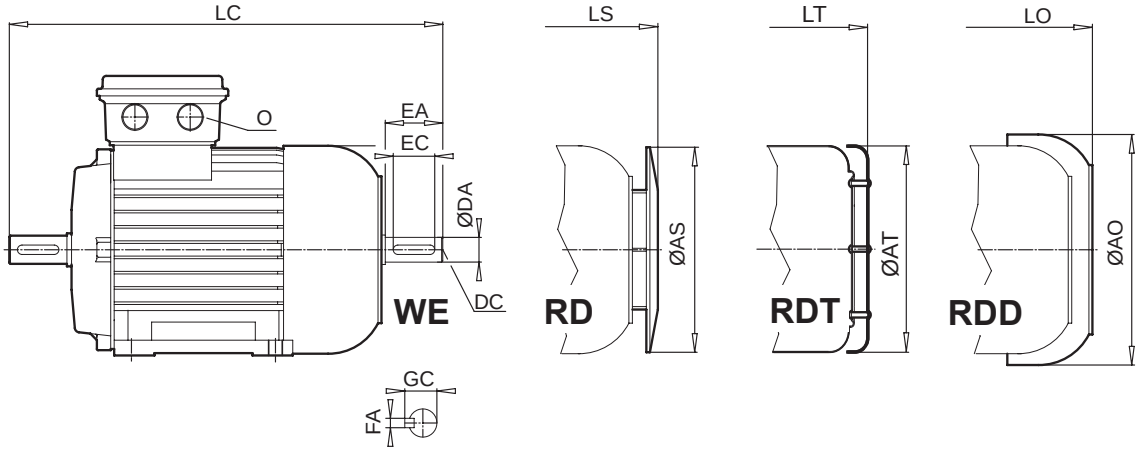

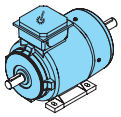
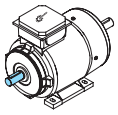
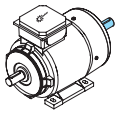

[mm]

LC	LL	AS	AT	AO	LS	LT	LO	O	D	DB	E	EB	F	GA	DA	DC	EA	EC	FA	GC
238	100	123	123	138	226	233	241	M20 x 1,5	11	M4	23	16	4	12,5	11	M4	23	16	4	12,5
268	100	138	138	156	255	258	268	M20 x 1,5	14	M5	30	20	5	16,0	11	M4	23	16	4	12,5
309	114	156	156	176	291	229	302	M25 x 1,5	19	M6	40	32	6	21,5	14	M5	30	20	5	16,0
348 373	114	176	176	194	316 341	320 345	332 357	M25 x 1,5	24	M8	50	40	8	27,0	19	M6	40	32	6	21,5
422	114	194	194	218	381	388	394	M32 x 1,5	28	M10	60	50	8	31,0	24	M8	50	40	8	27,0
440 465	114	218	218	258	401 426	411 436	424 449	M32 x 1,5	28	M10	60	50	8	31,0	24	M8	50	40	8	27,0
551 589	122	257	258	310	470 508	496 534	494 532	M32 x 1,5	38	M12	80	70	10	41,0	32	M12	80	70	10	35,0
721	186	310	-	367	619	-	647	M40 x 1,5	42	M16	110	90	12	45,0	42	M16	110	90	12	45,0
765	186	310	-	367	663	-	691	M40 x 1,5	42	M16	110	90	12	45,0	42	M16	110	90	12	45,0
843	186	348	-	403	741	-	794	M40 x 1,5	48	M16	110	100	14	51,5	48	M16	110	100	14	51,5

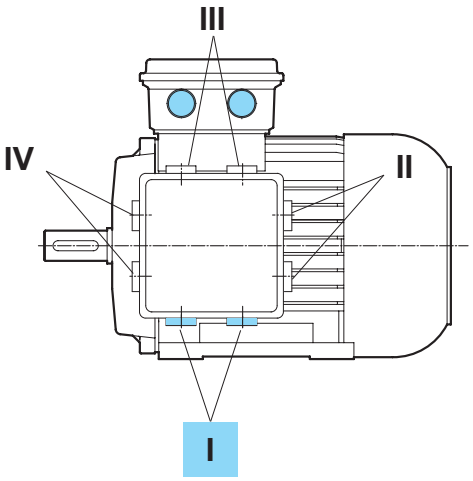

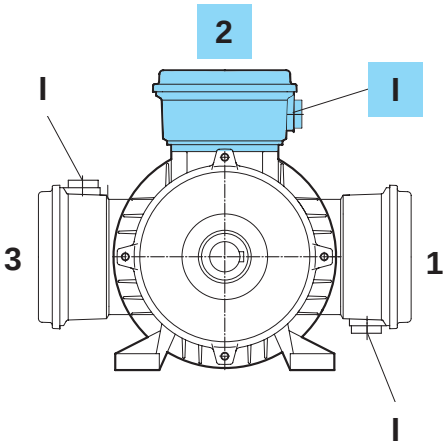

⇨ 🕮 A50

B5

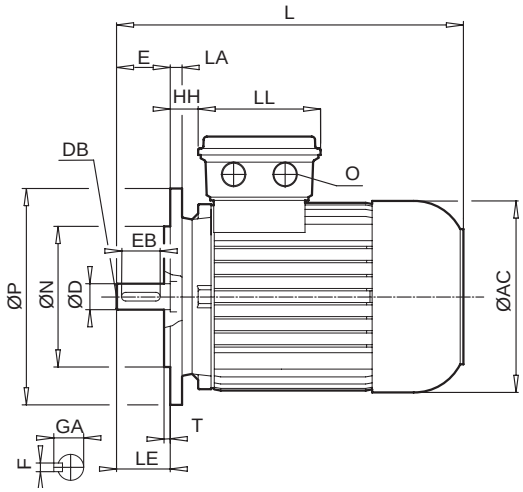

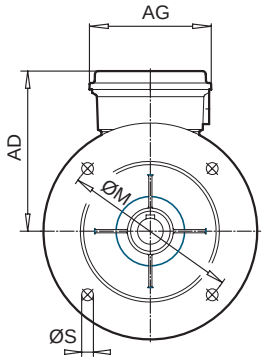

Type	IE1*	IE2	IE3	LA	M	N	P	S	T	AC	AD	AG	HH	L	LC	LE	LL
			[mm]														
63	S/L	-	-	10	115	95	140	9	3,0	123	115	100	12	215	238	23	100
71	S/L	-	-	10	130	110	160	9	3,5	138	124	100	20	244	268	30	100
80	S/L	SH/LH	LP	11	165	130	200	11	3,5	156	142	114	22	276	309	40	114
90	S/L	SH/LH	SP/LP	11	165	130	200	11	3,5	176	147	114	26	326	373	50	114
100	L/LA	LH/AH	LP/AP	15	215	180	250	13,5	4,0	194	169	114	32	366	422	60	114
112 112	M -	SH MH	- MP	15	215	180	250	13	4,0	218	179	114	35	386 411	440 465	60	114
132	S/M/MA	SH/MH/LH	SP/MP	20	265	230	300	13	4,0	258	204	122	47	491	589	80	122
160 160	M/L -	SH/MH LH	MP LP	20	300	250	350	17,5	5,0	310	242	186	52	602 646	721 765	110	186
180 180	MX LX	- -	- -	20	300	250	350	17,5	5,0	310	242	186	52	602 646	721 765	110	186
180	-	MH/LH	MP/LP	14	300	250	350	17,5	5,0	348	259	186	54	724	843	110	186
200	LX	XH	-	14	350	300	400	17,5	5,0	348	259	186	54	724	843	110	186

* + Standard

IM B5

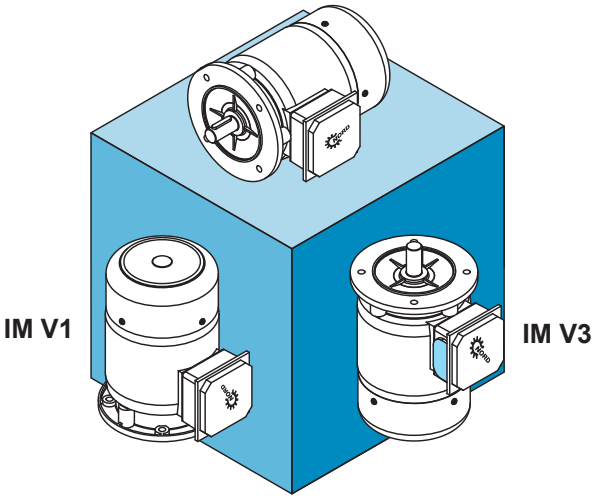

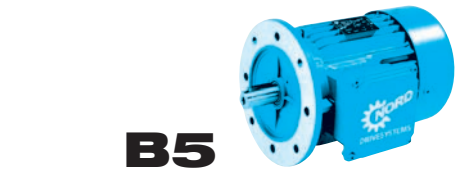

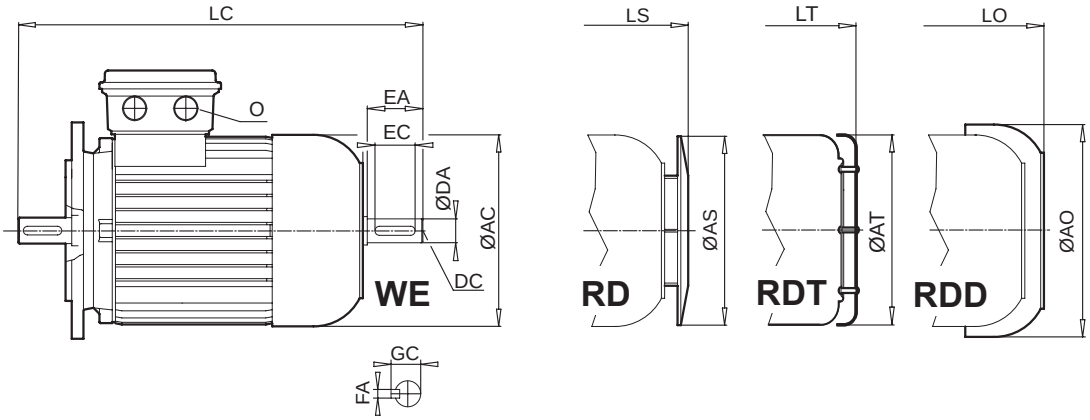

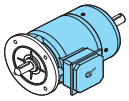
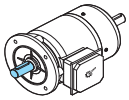
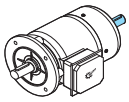

[mm]

AS	AT	AO	LS	LT	LO	O	D	DB	E	EB	F	GA	DA	DC	EA	EC	FA	GC
123	123	138	226	233	241	M20 x 1,5	11	M4	23	16	4	12,5	11	M4	23	16	4	12,5
138	138	156	255	258	268	M20 x 1,5	14	M5	30	20	5	16,0	11	M4	23	16	4	12,5
156	156	176	291	296	302	M25 x 1,5	19	M6	40	32	6	21,5	14	M5	30	20	5	16,0
176	176	194	341	345	357	M25 x 1,5	24	M8	50	40	8	27,0	19	M6	40	32	6	21,5
194	194	218	381	388	394	M32 x 1,5	28	M10	60	50	8	31,0	24	M8	50	40	8	27,0
218	218	258	401 426	411 436	424 449	M32 x 1,5	28	M10	60	50	8	31,0	24	M8	50	40	8	27,0
257	258	310	508	534	532	M32 x 1,5	38	M12	80	70	10	41,0	32	M12	80	70	10	35,0
310	-	367	619 663	-	647 691	M40 x 1,5	42	M16	110	90	12	45,0	42	M16	110	90	12	45,0
310	-	367	619 663	-	647 691	M40 x 1,5	48	M16	110	100	14	51,5	42	M16	110	90	12	49,0
348	-	403	741	-	794	M40 x 1,5	48	M16	110	100	14	51,5	48	M16	110	100	14	51,5
348	-	403	741	-	794	M40 x 1,5	55	M20	110	100	16	59,0	48	M16	110	100	14	51,5

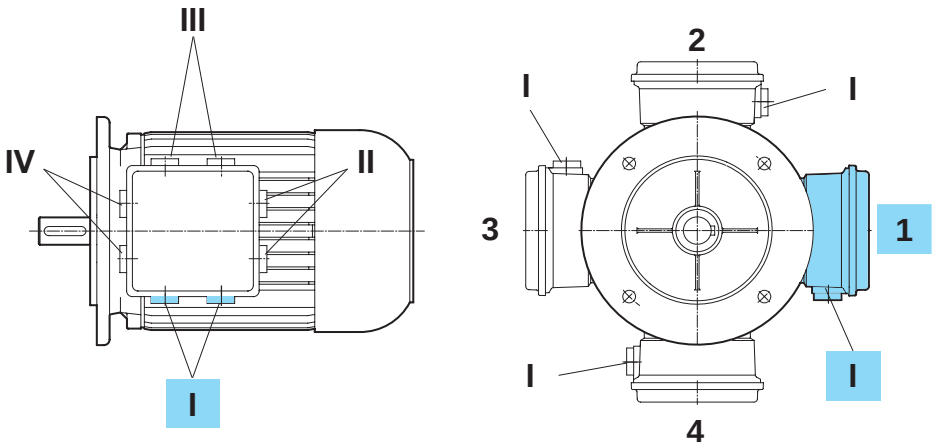

⇨ 🕮 A50

B14

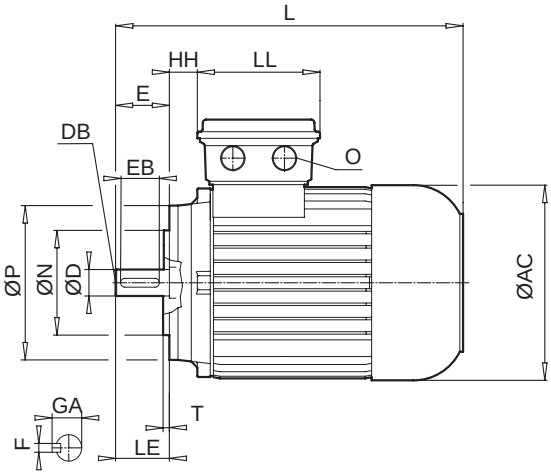

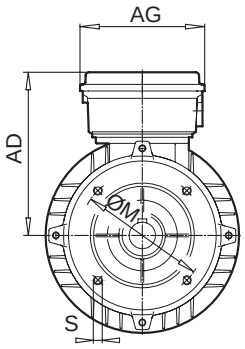

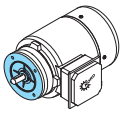

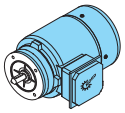

Type	IE1*	IE2	IE3	M	N	P	S	T	AC	AD	AG	HH	L	LC	LE	LL
			[mm]													
63	S/L	-	-	75	60	90	M5 x 8	2,5	123	115	100	12	215	238	23	100
71	S/L	-	-	85	70	105	M6 x 12	2,5	138	124	100	20	244	268	30	100
80	S/L	SH/LH	SP	100	80	120	M6 x 12	3,0	156	142	114	22	276	309	40	114
90	S/L	SH/LH	SP/LP	115	95	140	M8 x 15	3,0	176	147	114	26	326	373	50	114
100	L/LA	LH/AH	LP/AP	130	110	160	M8 x 16	3,5	194	169	114	32	366	422	60	114
112 112	M -	SH MH	- MP	130	110	160	M8 x 12	3,5	218	179	114	35	386 411	440 465	60	114
132	S/M/MA	SH/MH/LH	SP/MP	165	130	200	M10 x 18	3,5	258	204	122	47	491	589	80	122
160 160	M/L -	SH/MH LH	MP LP	165	130	200	M10 x 20	3,5	310	242	186	52	602 646	721 765	110	186
180 180	MX LX	- -	- -	165	130	200	M10 x 20	3,5	310	242	186	52	602 646	721 765	110	186

* + Standard

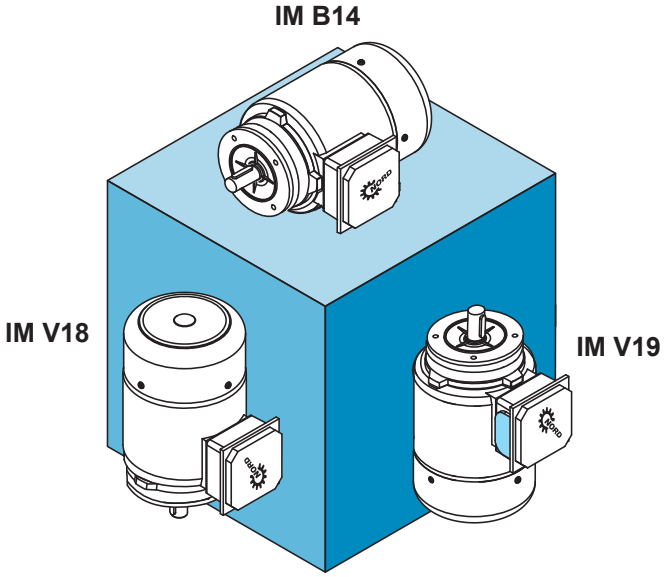

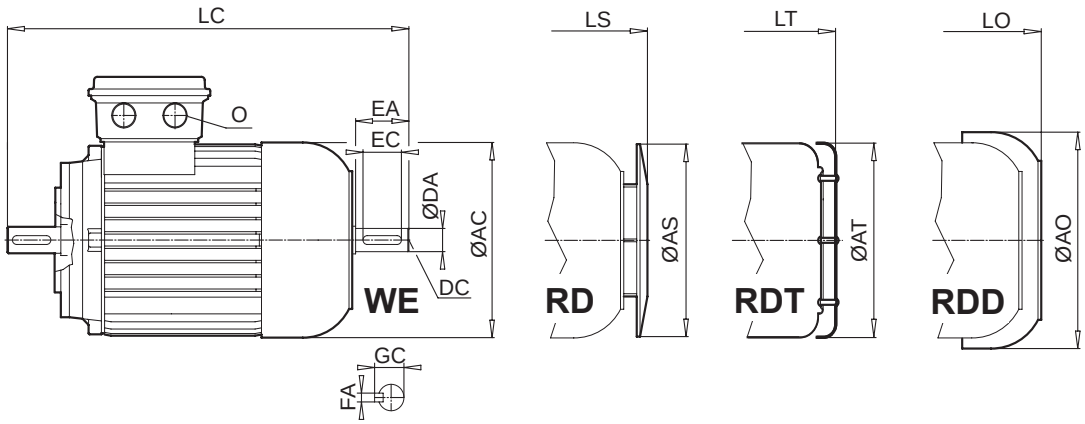

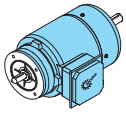
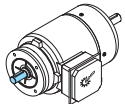
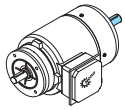

[mm]

AS	AT	AO	LS	LT	LO	O	D	DB	E	EB	F	GA	DA	DC	EA	EC	FA	GC
123	123	138	226	233	241	M20 x 1,5	11	M4	23	16	4	12,5	11	M4	23	16	4	12,5
138	138	156	255	258	268	M20 x 1,5	14	M5	30	20	5	16,0	11	M4	23	16	4	12,5
156	156	176	291	296	302	M25 x 1,5	19	M6	40	32	6	21,5	14	M5	30	20	5	16,0
176	176	194	341	345	357	M25 x 1,5	24	M8	50	40	8	27,0	19	M6	40	32	6	21,5
194	194	218	381	388	394	M32 x 1,5	28	M10	60	50	8	31,0	24	M8	50	40	8	27,0
218	218	258	401 426	411 436	424 449	M32 x 1,5	28	M10	60	50	8	31,0	24	M8	50	40	8	27,0
257	258	310	508	534	532	M32 x 1,5	38	M12	80	70	10	41,0	32	M12	80	70	10	35,0
310	-	367	619 663	-	647 691	M40 x 1,5	42	M16	110	90	12	45,0	42	M16	110	90	12	45,0
310	-	367	619 663	-	647 691	M40 x 1,5	48	M16	110	100	14	51,5	42	M16	110	90	12	49,0

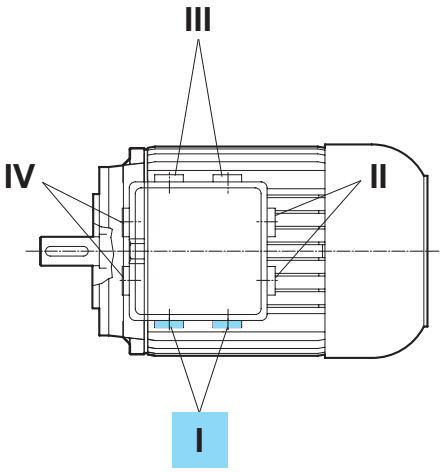

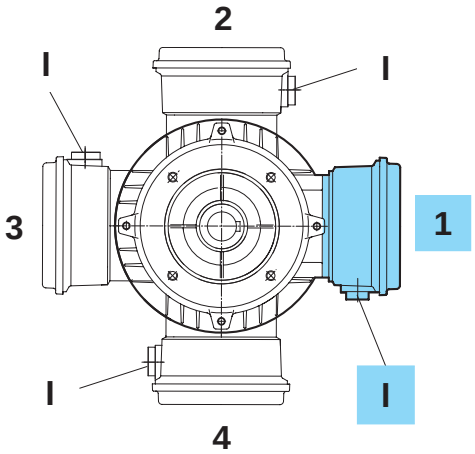

⇨ A50

B3-BRE

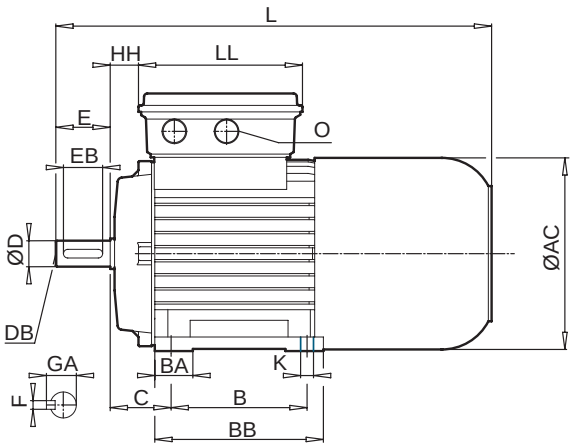

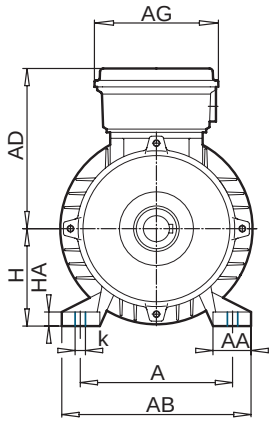

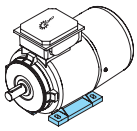

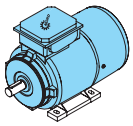

Type																				
	IE1*	IE2	IE3	BRE [Nm]	[mm] A	AA	AB	B	BA	BB	HA	k	K	AC	AD	AG	C	H	HH	L
63	S/L	-	-	5	100	21	120	80	27	105	9	12	7	123	123	89	40	63	19	271
71	S/L	-	-	5	112	24	136	90	24	108	10	14	9	138	132	89	45	71	27	302
80 80	S L	SH LH	- LP	5 10	125	30	160	100	30	125	11	17	9	156	142	108	50	80	26	340
90 90	S L	- SH/LH	- SP/LP	20 20	140	34	174	100 125	35	130 155	12	17	9	176	147	108	56	90	30	376 401
100 100	L LA	LH AH	LP AP	20 40	160	37	192	140	30	175	15	22	12	194	172	108	63	100	36	457
112 112	M -	SH MH	- MP	60 60	190	40	224	140	34	175	15	22	12	218	182	108	70	112	39	480 505
132 132 132 132	S - M MA	- SH MH LH	- SP MP -	60 60 100 150	216	58	260	140 178 178 178	37	180 218 218 218	18	30	14	258	201	139	89	132	40	560 598 598 598
160 160 160	M L -	SH/MH - LH	MP - LP	150 250 250	254 254	72 72	318 318	210 254 254	52 52	264 308 308	25 25	30 30	14,5 14,5	310 310	242 242	186 186	108 108	160 160	52 52	737 781
180 180	- -	MH LH	MP LP	250 250	279	88,5	340	241 279	-	281 319	27	30	14,5	348	259	186	121	180	54	851

* + Standard

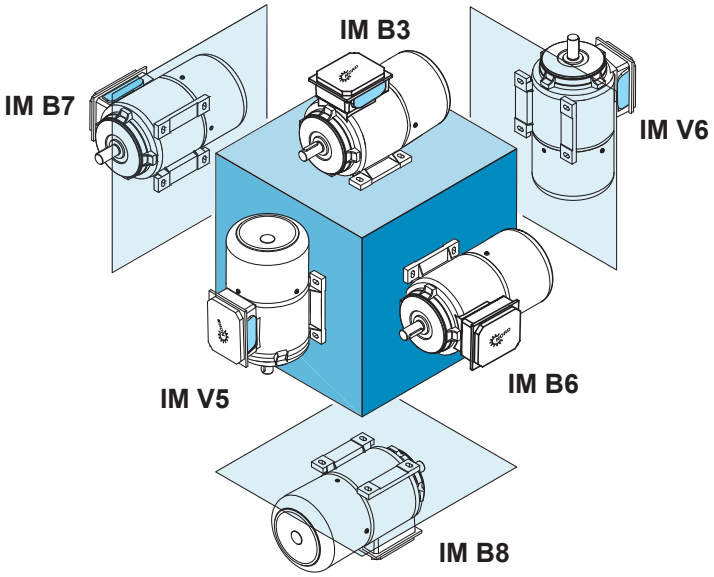

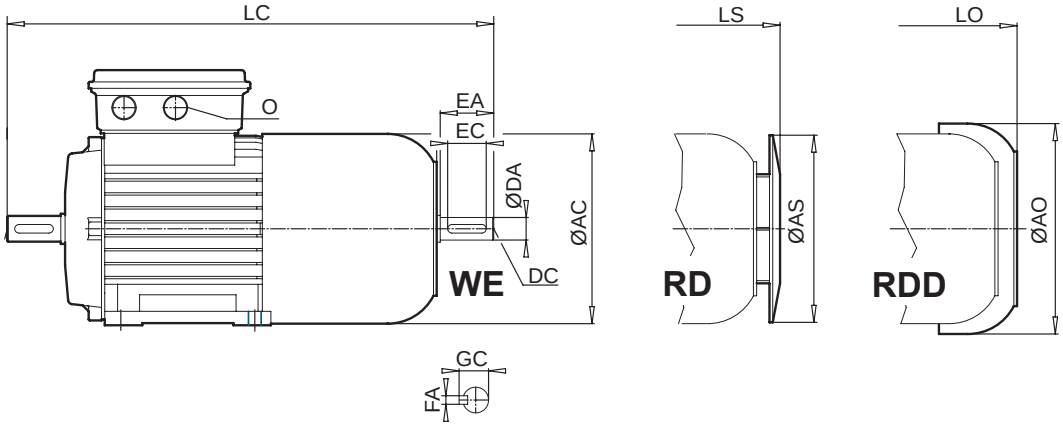

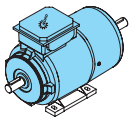
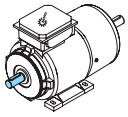
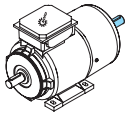

[mm]

LC	LL	AS	AO	LS	LO	O	D	DB	E	EB	F	GA	DA	DC	EA	EC	FA	GC
298	134	123	138	282	297	M20 x 1,5	11	M4	23	16	4	12,5	11	M4	23	16	4	12,5
329	134	138	156	313	326	M20 x 1,5	14	M5	30	20	5	16,0	11	M4	23	16	4	12,5
374	153	156	176	355	366	M25 x 1,5	19	M6	40	32	6	21,5	14	M5	30	20	5	16,0
414 439	153	176	194	391 416	406 431	M25 x 1,5	24	M8	50	40	8	27,0	14	M5	30	20	5	16,0
517	153	194	218	472	485	M32 x 1,5	28	M10	60	50	8	31,0	24	M8	50	40	8	27,0
537 562	153	218	258	495 520	518 543	M32 x 1,5	28	M10	60	50	8	31,0	24	M8	50	40	8	27,0
650 688 688 688	185	257	310	577 615 615 615	596 634 634 634	M32 x 1,5	38	M12	80	70	10	41,0	32	M12	80	70	10	35,0
856	186	310	367	754	782	M40 x 1,5	42	M16	110	90	12	45,0	42	M16	110	90	12	45,0
900	186	310	367	798	826	M40 x 1,5	42	M16	110	90	12	45,0	42	M16	110	90	12	45,0
970	186	348	403	868	921	M40 x 1,5	48	M16	110	100	14	51,5	48	M16	110	100	14	51,5

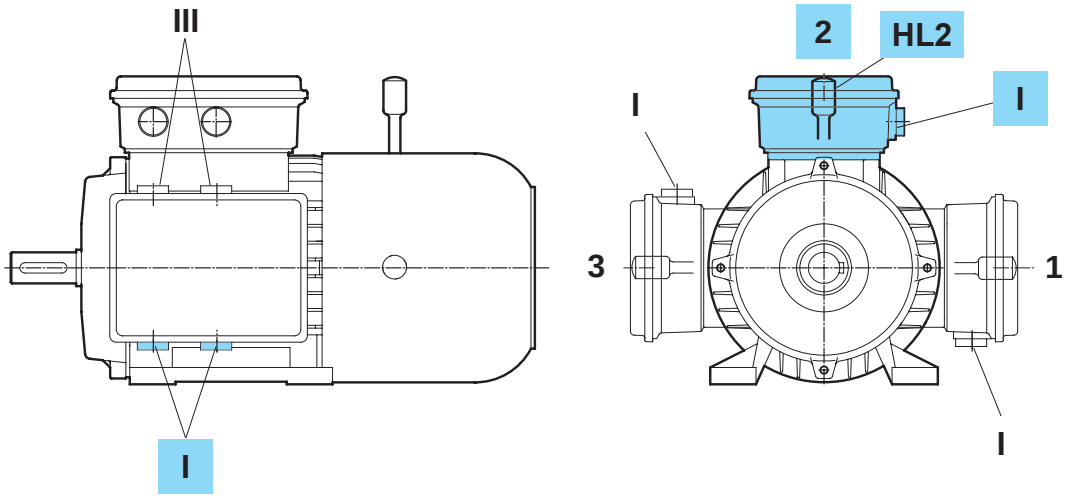

⇨ A50

B5-BRE

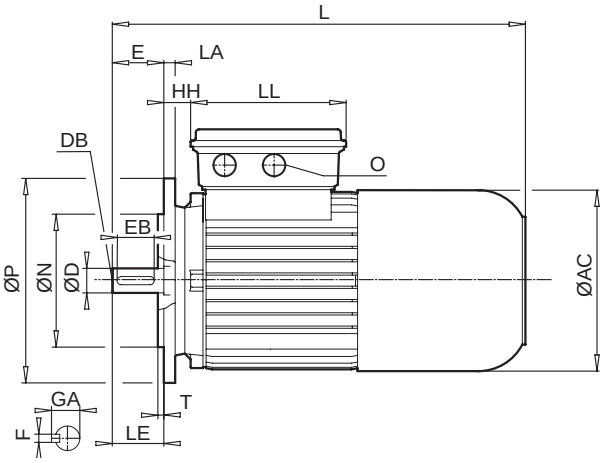

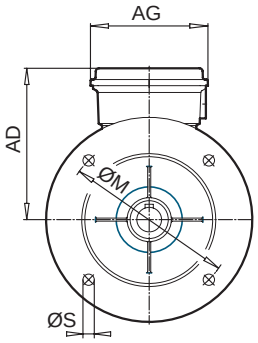

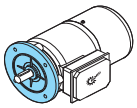

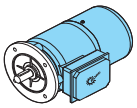

Type	IE1*	IE2	IE3	BRE [Nm]	LA	M	N	P	S	T	AC	AD	AG	HH	L
				[mm]											
63	S/L	-	-	5	10	115	95	140	9	3,0	123	123	89	19	271
71	S/L	-	-	5	10	130	110	160	9	3,5	138	132	89	27	302
80	S L	SH LH	- LP	5 10	11	165	130	200	11	3,5	156	142	108	26	340
90	S/L	SH/LH	SP/LP	20	11	165	130	200	11	3,5	176	147	108	30	401
100	L LA	LH AH	LP AP	20 40	15	215	180	250	13,5	4,0	194	173	108	36	457
112 112	M -	SH MH	- MP	60 60	15	215	180	250	13	4,0	218	182	108	39	480 505
132 132 132	S M MA	SH MH LH	SP MP -	60 100 150	20	265	230	300	13	4,0	258	201	139	40	598
160 160 160	M L -	SH/MH - LH	MP - LP	150 250 250	20	300	250	350	17,5	5,0	310	242	186	52	737 737 781
180 180	MX LX	- -	- -	250 250	20	300	250	350	17,5	5,0	310	242	186	52	737 781
180	-	MH/LH	MP/LP	250	14	300	250	350	17,5	5,0	348	259	186	54	851
200	LX	XH	-	400	14	350	300	400	17,5	5,0	348	259	186	54	851

* + Standard

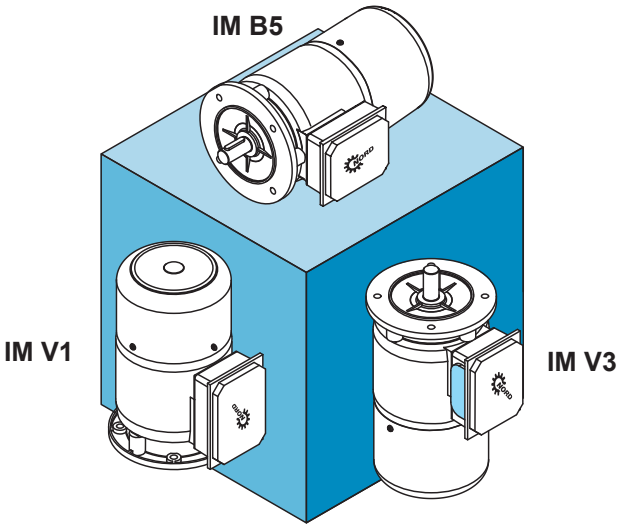

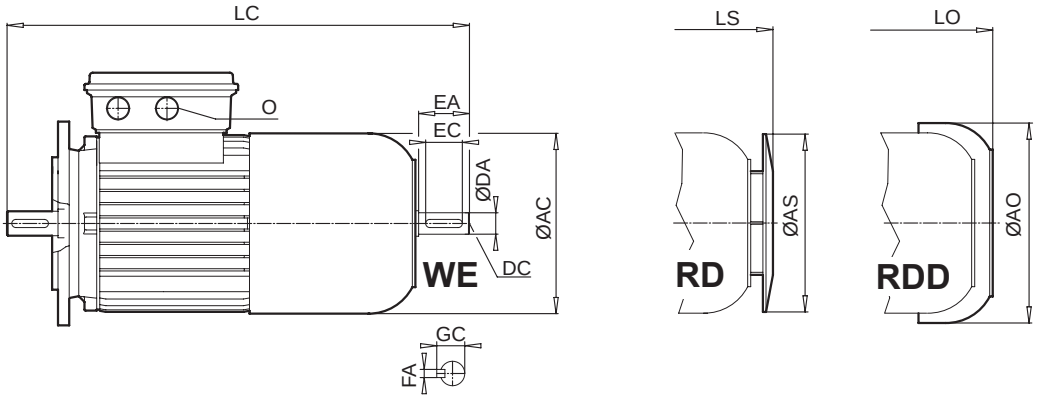

[mm]

LC	LE	LL	AS	AO	LS	LO	O	D	DB	E	EB	F	GA	DA	DC	EA	EC	FA	GC
298	23	134	123	138	282	297	M20 x 1,5	11	M4	23	16	4	12,5	11	M4	23	16	4	12,5
329	30	134	138	156	313	326	M20 x 1,5	14	M5	30	20	5	16,0	11	M4	23	16	4	12,5
374	40	153	156	176	355	366	M25 x 1,5	19	M6	40	32	6	21,5	14	M5	30	20	5	16,0
439	50	153	176	194	416	431	M25 x 1,5	24	M8	50	40	8	27,0	14	M5	30	20	5	16,0
517	60	153	194	218	472	485	M32 x 1,5	28	M10	60	50	8	31,0	24	M8	50	40	8	27,0
537 562	60	153	218	258	495 520	518 543	M32 x 1,5	28	M10	60	50	8	31,0	24	M8	50	40	8	27,0
688	80	185	257	310	615	634	M32 x 1,5	38	M12	80	70	10	41,0	32	M12	80	70	10	35,0
856 856 900	110	186	310	367	754 754 798	782 782 826	M40 x 1,5	42	M16	110	90	12	45,0	42	M16	110	90	12	45,0
856 900	110	186	310	367	754 798	782 826	M40 x 1,5	48	M16	110	100	14	51,5	42	M16	110	90	12	49,0
970	110	186	348	403	868	921	M40 x 1,5	48	M16	110	100	14	51,5	48	M16	110	100	14	51,5
970	110	186	348	403	868	921	M40 x 1,5	55	M20	110	100	16	59,0	48	M16	110	100	14	51,5

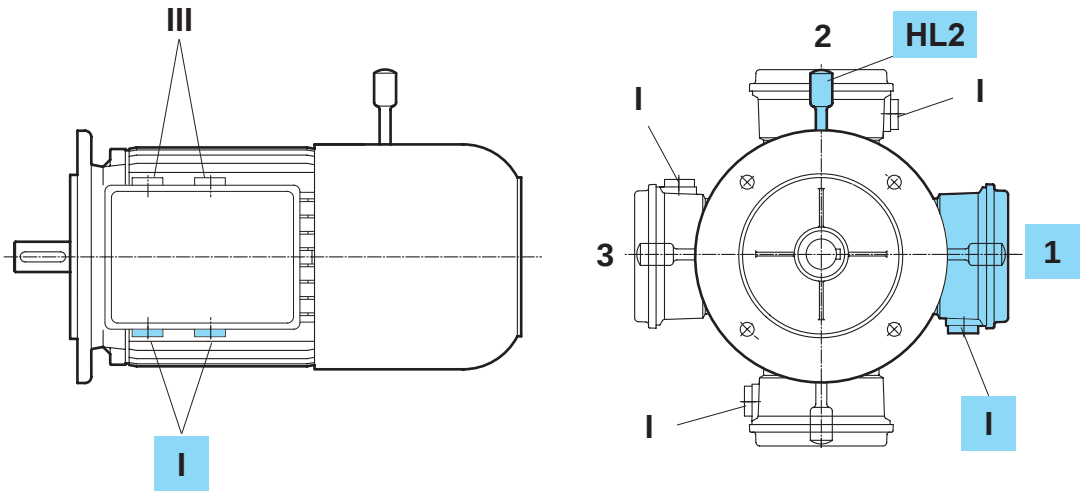

⇨ 🕮 A50

B14-BRE

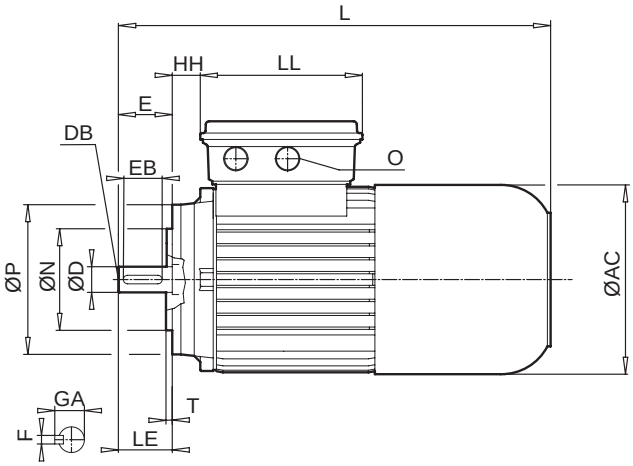

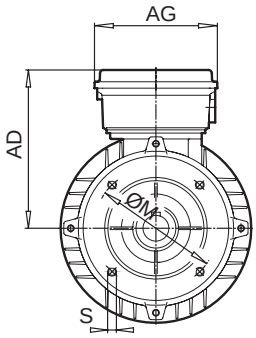

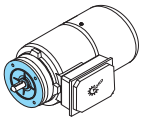

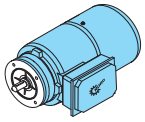

Type	IE1*	IE2	IE3	BRE [Nm]	M	N	P	S	T	AC	AD	AG	HH	L
				[mm]										
63	S/L	-	-	5	75	60	90	M5 x 8	2,5	123	123	89	19	271
71	S/L	-	-	5	85	70	105	M6 x 13	2,5	138	132	89	27	302
80	S L	SH LH	- LP	5 10	100	80	120	M6 x 12	3,0	156	142	108	26	340
90	S/L	SH/LH	SP/LP	20	115	95	140	M8 x 15	3,0	176	147	108	30	401
100	L LA	LH AH	LP AP	20 40	130	110	160	M8 x 16	3,5	194	172	108	36	457
112 112	M -	SH MH	- MP	60 60	130	110	160	M8 x 12	3,5	218	182	108	39	480 505
132 132 132	S M MA	SH MH LH	SP MP -	60 100 150	165	130	200	M10 x 18	3,5	258	201	139	40	598
160 160 160	M L -	SH/MH - LH	MP - LP	150 250 250	165	130	200	M10 x 20	3,5	310	242	186	52	737 737 781
180 180	MX LX	- -	- -	250 250	165	130	200	M10 x 20	3,5	310	242	186	52	737 781

* + Standard

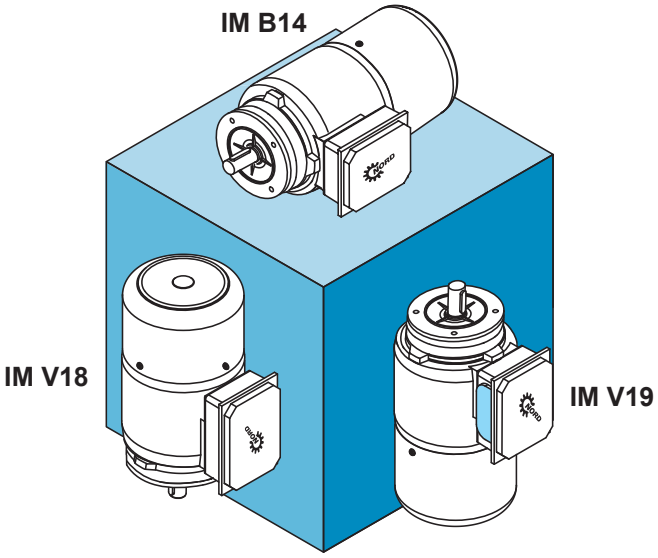

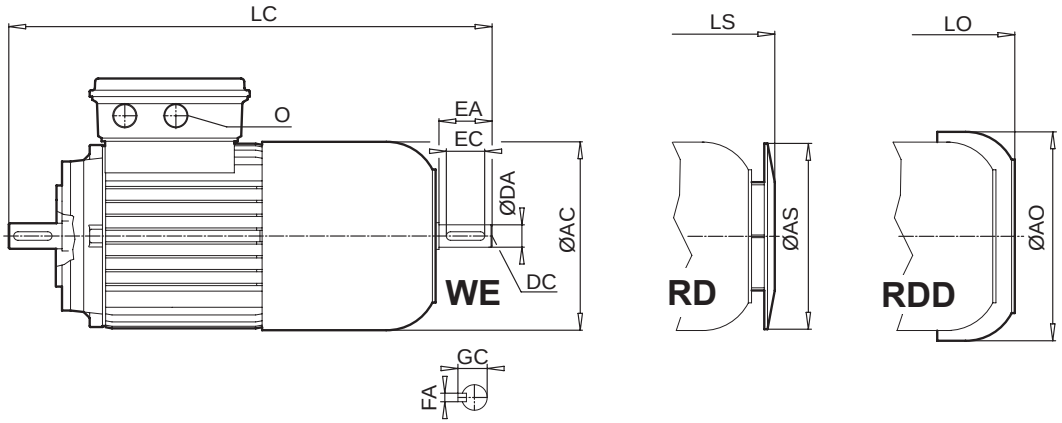

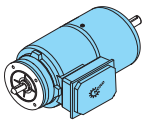
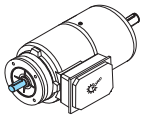
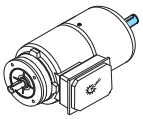

[mm]

LC	LE	LL	AS	AO	LS	LO	O	D	DB	E	EB	F	GA	DA	DC	EA	EC	FA	GC
298	23	134	123	138	282	297	M20 x 1,5	11	M4	23	16	4	12,5	11	M4	23	16	4	12,5
329	30	134	138	156	313	326	M20 x 1,5	14	M5	30	20	5	16,0	11	M4	23	16	4	12,5
374	40	153	156	176	355	366	M25 x 1,5	19	M6	40	32	6	21,5	14	M5	30	20	5	16,0
439	50	153	176	194	416	431	M25 x 1,5	24	M8	50	40	8	27,0	14	M5	30	20	5	16,0
517	60	153	194	218	472	485	M32 x 1,5	28	M10	60	50	8	31,0	24	M8	50	40	8	27,0
537 562	60	153	218	258	495 520	518 543	M32 x 1,5	28	M10	60	50	8	31,0	24	M8	50	40	8	27,0
688	80	185	257	310	615	634	M32 x 1,5	38	M12	80	70	10	41,0	32	M12	80	70	10	35,0
856 856 900	110	186	310	367	754 754 798	782 782 826	M40 x 1,5	42	M16	110	90	12	45,0	42	M16	110	90	12	45,0
856 900	110	186	310	367	754 798	782 826	M40 x 1,5	48	M16	110	100	14	51,5	42	M16	110	90	12	49,0

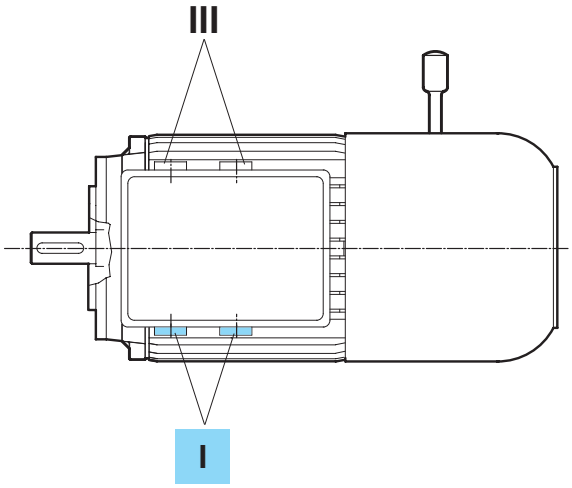

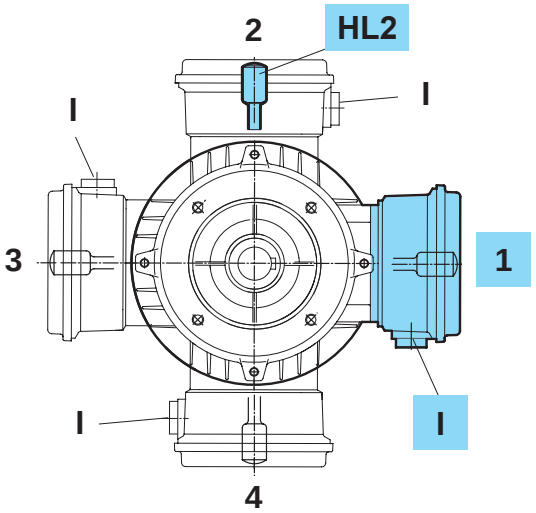

⇨ A50

IG, F, IGF

Motor

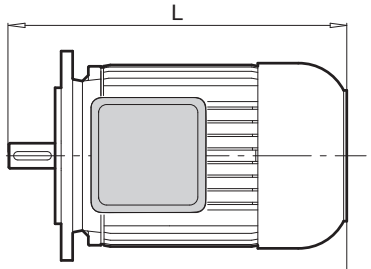

Option **IG**

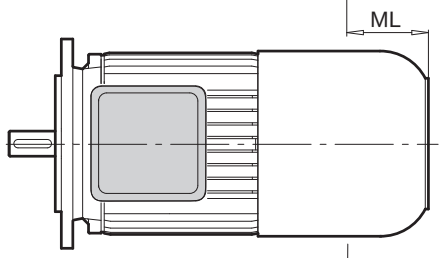

Option **F**

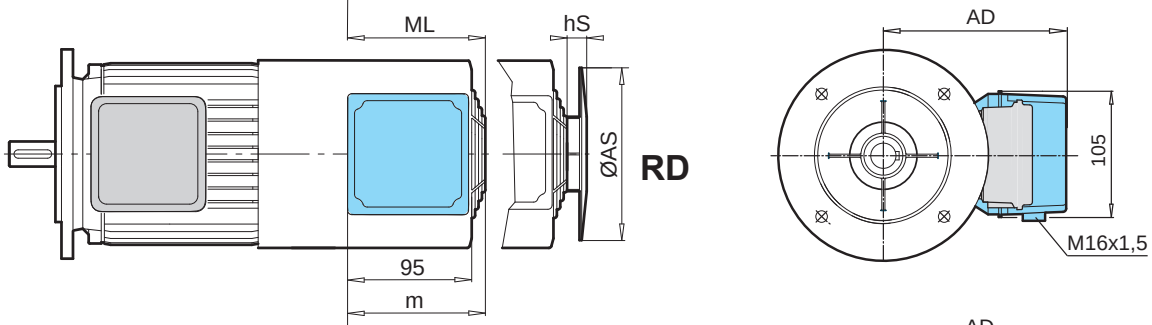

Option **IG F**

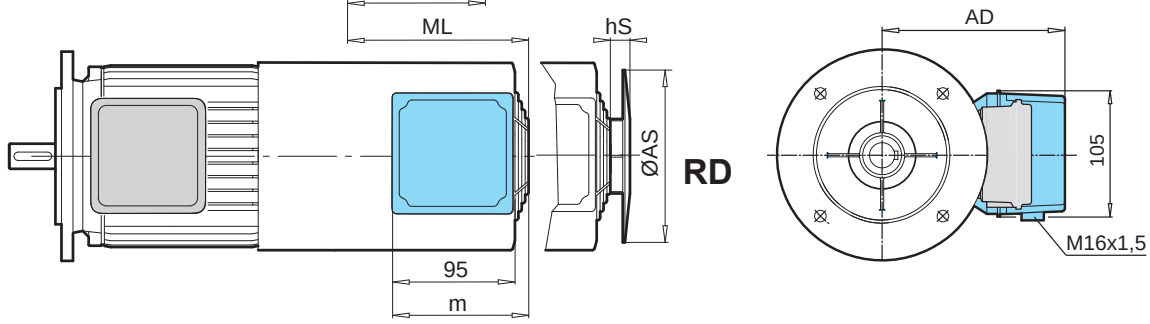

Type					IG	F	IGF	F RD / IG F RD			
	IE1*	IE2	IE3	[mm] L	ML	ML	ML	AS	hS	AD	m
63	S/L	-	-	215	55	88	158	133	37	114	107
71	S/L	-	-	244	56	89	144	150	37	123	107
80	S/L	SH/LH	LP	276	61	90	140	170	40	132	107
90	S/L	SH/LH	SP/LP	326	72	104	149	188	30	142	117
100	L/LA	LH/AH	LP/AP	366	69	95	155	210	28	151	117
112 112	M -	SH MH	- MP	386 411	68	99	149	249	33	163	117
132	S/M/MA	SH/MH/LH	SP/MP	491	63	115	155	300	25	183	127
160 160	M/L -	SH/MH LH	MP LP	602 646	70	150 145	235	338	32	209,5	127
180 180	MX LX	- -	- -	602 646	70	150 145	235	338	32	209,5	127
180	-	MH/LH	MP/LP	724	70	153	233	338	32	209,5	127
200	LX	XH	-	724	70	153	233	338	32	209,5	127

* **+ Standard**

BRE Motor

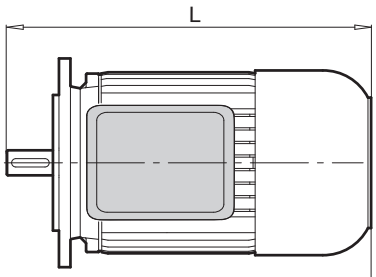

Option
BRE IG

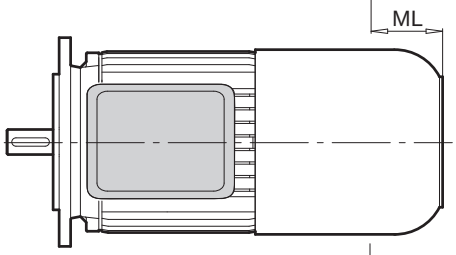

Option
BRE F

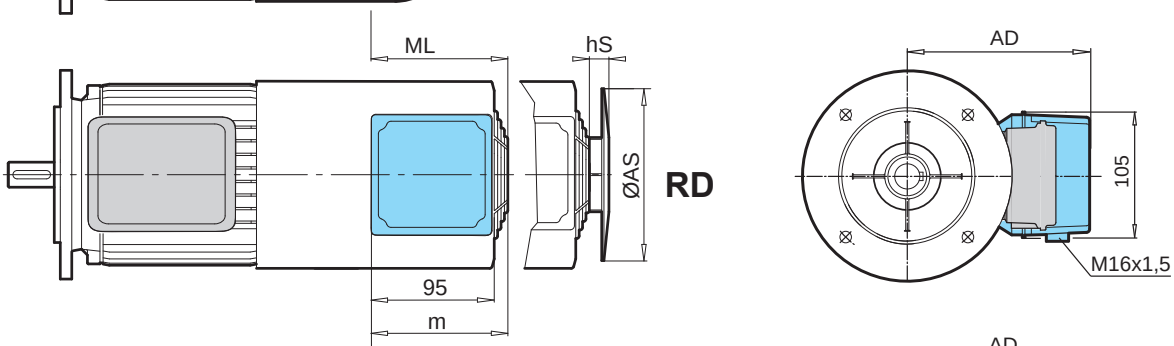

Option
BRE IG F

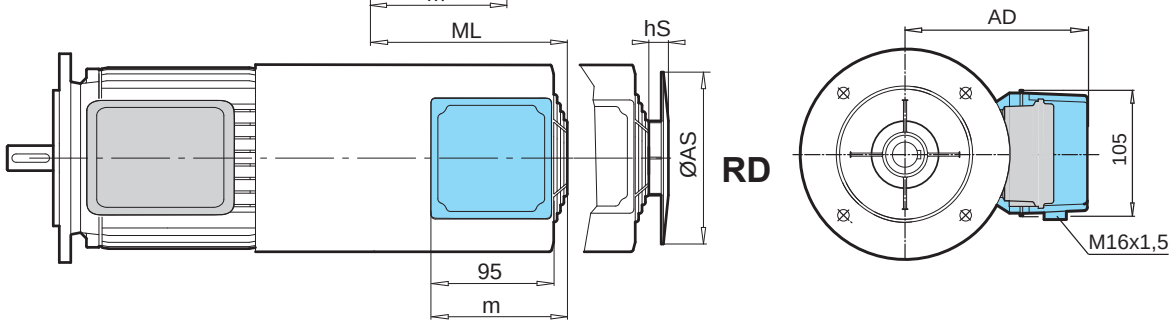

Type BRE	IE1*	IE2	IE3		IG	F	IGF	F RD / IG F RD			
			[mm]	L	ML	ML	ML	AS	hS	AD	m
63	S/L	-	-	271	62	90	125	133	37	114	107
71	S/L	-	-	302	74	94	139	150	37	123	107
80	S/L	SH/LH	LP	340	57	90	140	170	40	132	107
90	S/L	SH/LH	SP/LP	401	70	100	145	188	30	142	117
100	L/LA	LH/AH	LP/AP	457	70	105	140	210	28	151	117
112 112	M -	SH MH	- MP	480 505	64	105	140	249	33	163	117
132	S/M/MA	SH/MH/LH	SP/MP	598	65	125	155	300	25	183	127
160 160	M/L -	SH/MH LH	MP LP	737 781	70	145	235	338	32	209,5	127
180 180	MX LX	- -	- -	737 781	70	145	235	338	32	209,5	127
180	-	MH/LH	MP/LP	851	70	146	251	338	32	209,5	127
200	LX	XH	-	851	70	146	251	338	32	209,5	127

* + Standard

HR, MS

HR

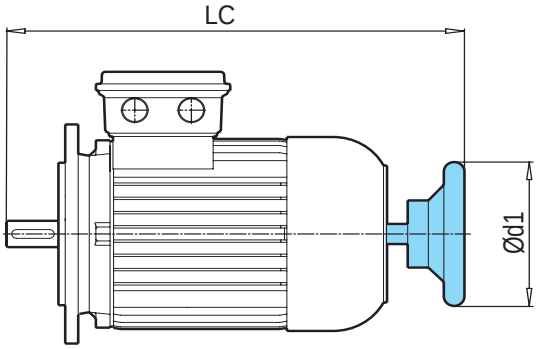

Type	IE1*	IE2	IE3	[mm] d1	LC	LC + BRE
63	S/L	-	-	100	254	314
71	S/L	-	-	100	284	345
80	S/L	SH/LH	LP	100	325	390
90	S (B3)	-	-	160	368	434
90	S/L	SH/LH	SP/LP	160	393	459
100	L/LA	LH/AH	LP/AP	160	442	537
112 112	M -	SH MH	- MP	160	460 485	557 582
132	S (B3)	-	-	200	572	671
132	S/M/MA	SH/MH/LH	SP/MP	200	610	709
160 160	M/L -	SH/MH LH	MP LP	315	744 788	879 923
180	MX LX	- -	- -	315	744 788	879 923
180	-	MH/LH	MP/LP	315	866	993
200	LX	XH	-	315	866	993

* + Standard

MS

⇨ A39

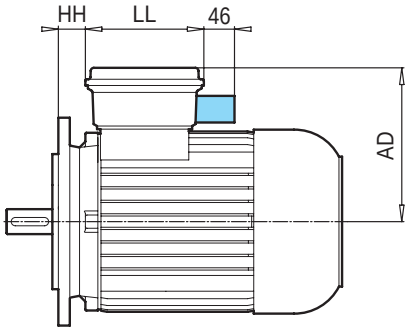

Type	IE1*	IE2	IE3	[mm] AD	HH	LL
63	S/L	-	-	140	5	114
71	S/L	-	-	149	13	114
80	S/L	SH/LH	LP	158	22	114
90	S/L	SH/LH	SP/LP	163	26	114
100	L/LA	LH/AH	LP/AP	174	32	114
112	M	SH/MH	MP	184	45	114
132	S/M/MA	SH/MH/LH	SP/MP	204	47	122

* + Standard

MG

⇨📖 A34

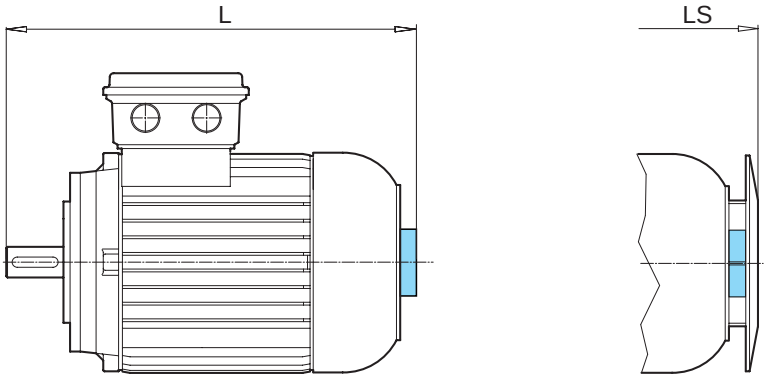

BRE MG

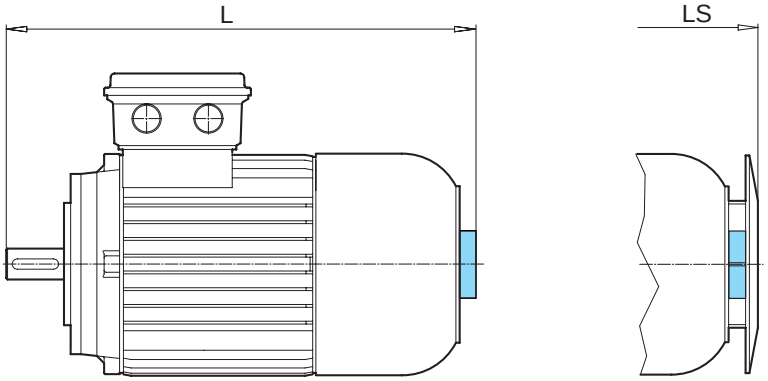

Type		IE1*	IE2	IE3				
				[mm]	L	L + BRE	LS	LS + BRE
63	S/L	-	-		226	286	237	297
71	S/L	-	-		256	319	267	330
80	S/L	SH/LH	LP		286	352	295	361
90	S/L	SH/LH	SP/LP		340	414	349	423
100	L/LA	LH/AH	LP/AP		379	470	387	479
112 112	M -	SH MH	- MP		398 423	493 518	407 432	502 526
132	S/M/MA	SH/MH/LH	SP/MP		501	607	512	618
160	M/L	SH/MH/LH	MP/LP		auf Anfrage			
180	-	MH/LH	MP/LP					

* + Standard

OL/H, EKK

OL/H

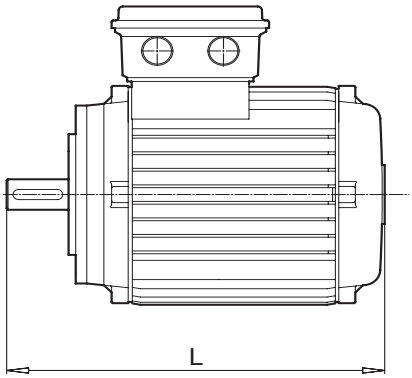

Type	IE1 + Standard	
		[mm] L
63	S/L	183
71	S/L	207
80	S/L	236
90	S (B3)	258
90	S/L	283
100	L/LA	322
112	M	336
132	S (B3)	393
132	S/M/MA	431
160	M/L	527
180 180	MX LX	527 571
200	LX	619

EKK

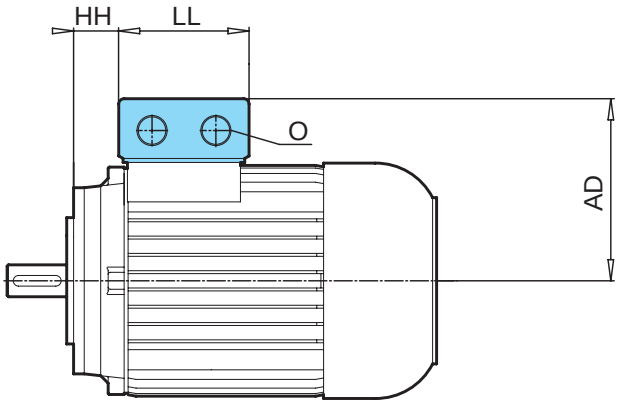

Type	IE1	IE2	IE3				
			[mm]	AD	LL	O	HH
63	S/L	-	-	100	75	M16 x 1,5	25
71	S/L	-	-	109	75	M16 x 1,5	33
80	S/L	SH/LH	LP	124	92	M20 x 1,5	33
90	S/L	SH/LH	SP/LP	129	92	M20 x 1,5	37
100	L/LA	LH/AH	LP/AP	140	92	M20 x 1,5	43
112	M	SH/MH	MP	150	92	M20 x 1,5	56
132	S/M/MA	SH/MH/LH	SP/MP	174	104	M25 x 1,5	56

* + Standard

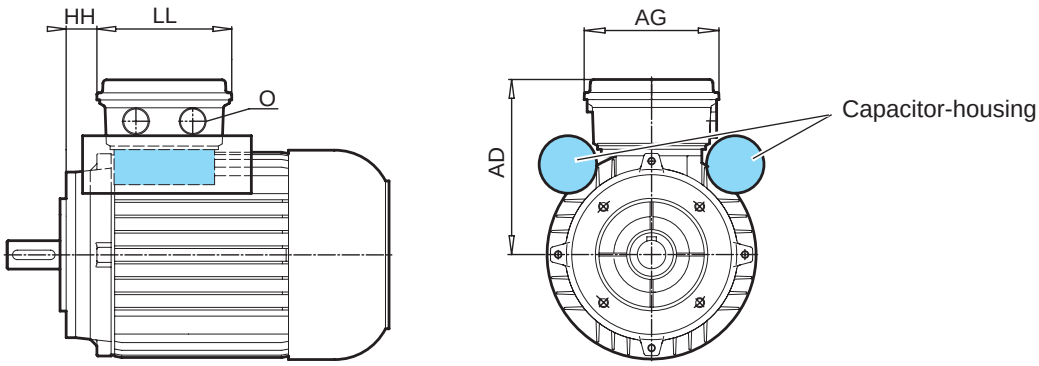

Type							BRE				
	[mm]	AD	AG	HH	LL	O	AD	AG	HH	LL	O
63 L/LA	EAR1	123	89	19	134	M20 x 1,5	140	108	9	153	M25 x 1,5
71 L/LA	EAR1	132	89	27	134	M20 x 1,5	149	108	17	153	M25 x 1,5
80 L/LA	EAR1	142	108	26	153	M25 x 1,5	142	108	26	153	M25 x 1,5
90 L/LB	EAR1	147	108	30	153	M25 x 1,5	147	108	30	153	M25 x 1,5
63 L/LA	EHB1	115	100	12	100	M20 x 1,5	123	89	19	134	M20 x 1,5
71 L/LA	EHB1	124	100	20	100	M20 x 1,5	132	89	27	134	M20 x 1,5
80 L/LA	EHB1	142	114	22	114	M25 x 1,5	142	108	26	153	M25 x 1,5
90 L/LB	EHB1	147	114	26	114	M25 x 1,5	147	108	30	153	M25 x 1,5
63 S/L	EST	115	100	12	100	M20 x 1,5	123	89	19	134	M20 x 1,5
71 S/L	EST	124	100	20	100	M20 x 1,5	132	89	27	134	M20 x 1,5
80 S/L	EST	142	114	22	114	M25 x 1,5	142	108	26	153	M25 x 1,5
90 S/L	EST	147	114	26	114	M25 x 1,5	147	108	30	153	M25 x 1,5
63 LA	ECR *	123	89	19	134	M20 x 1,5	140	108	9	153	M25 x 1,5
71 L/LA	ECR *	132	89	27	134	M20 x 1,5	149	108	17	153	M25 x 1,5
80 L/LA	ECR *	142	108	26	153	M25 x 1,5	143	108	26	153	M25 x 1,5
90 L/LA/LX	ECR *	147	108	30	153	M25 x 1,5	147	108	30	153	M25 x 1,5

* **with capacitor-housing**

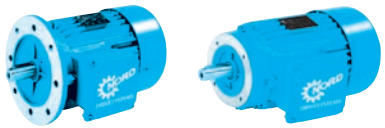

B5, B14

B5

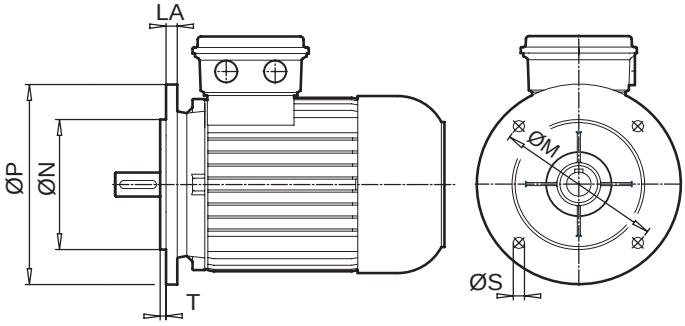

B14

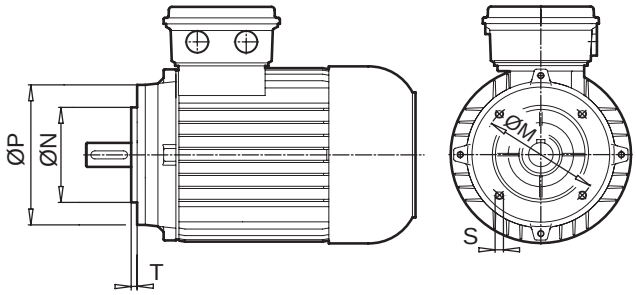

Type	B5, B14	LA	M	N	P	S	T
	[mm]						
63	B14	-	75	60	90	M5 x 8	2,5
	B14	-	85	70	105	M6 x 16	2,5
	B14	-	100	80	120	M6 x 12	3,0
	B5	10	115	95	140	9	3,0
71	B14	-	85	70	105	M6 x 13	2,5
	B14	-	100	80	120	M6 x 15	3,0
	B14	-	115	95	140	M8 x 16	3,0
	B5	10	130	110	160	9	3,5
80	B14	-	100	80	120	M6 x 12	3,0
	B14	-	115	95	140	M8 x 16	3,0
	B14	-	130	110	160	M8 x 16	3,5
	B5	11	165	130	200	11	3,5
90	B14	-	100	80	120	M6 x 14	3,0
	B14	-	115	95	140	M8 x 15	3,0
	B14	-	130	110	160	M8 x 16	3,0
	B5	11	165	130	200	11	3,5
100	B14	-	100	80	120	M6 x 14	3,0
	B14	-	115	95	140	M8 x 14	3,0
	B14	-	130	110	160	M8 x 16	3,5
	B14	-	165	130	200	M10 x 16	3,5
	B5	15	215	180	250	13	4,0
112	B14	-	115	95	140	M8 x 16	3,0
	B14	-	130	110	160	M8 x 12	3,5
	B14	-	165	130	200	M10 x 17	4,0
	B5	15	215	180	250	13	4,0
132	B14	-	130	110	160	M8 x 12	3,5
	B14	-	165	130	200	M10 x 18	4,0
	B5	20	265	230	300	14	4,0
160	B14	-	165	130	200	M10 x 20	3,5
180 .X	B5	20	265	230	300	13,5	4,0
180 .X	B5	14	300	250	350	17,5	5,0
180	B5	14	300	250	350	17,5	5,0
200	B5	14	350	300	400	17,5	5,0

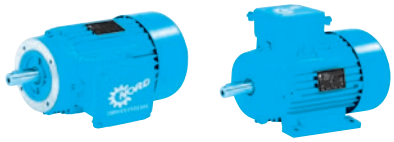

B3

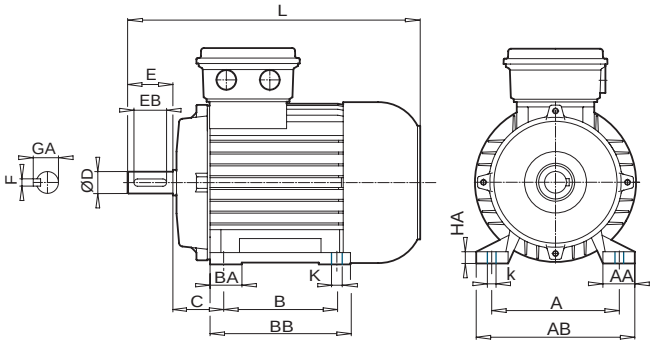

IE2	≙	HE	High Efficiency
IE3	≙	PE	Premium Efficiency

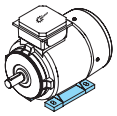
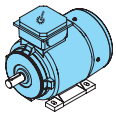
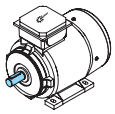

Type B3	IE1*	IE2	IE3	NEMA	[mm] A	AA	AB	B	BA	BB	HA	k	K	C	H	L	D 0 -0,013	E	EB	F	GA
71	S/L	-	-	56	123,95	36,5	148	76,2	19,5	94	12	13,7	8,7	69,9	88,9	280	15,875	47,6	42,9	4,78	17,9
80	S/L	SH/LH	LP	56 143 T	123,95 139,70	32,0 39,5	154 170	76,2 101,6	26,5 38	102 127	14 14,5	17,5	8,7	69,9 37,2	88,9	292 294	15,875 22,225	47,6 57,2	42,9 46,1	4,78	17,9 24,4
90	S/L	SH/LH	SP/LP	145 T	139,70	43	175	127,0	35	157	15	17,5	8,7	57,2	88,9	334	22,225	57,2	46,1	4,78	24,4
100	L LA	LH AH	LP AP	182 T 184 T	190,50	52,5	223	114,3 139,7	68	173	15	15	10,3	69,9	114,3	377	28,575	69,9	57,2	6,35	31,4
112 112	M -	SH MH	- MP	184 T 184 T	190,50	45,5	229	139,7	33	170	17	20,7	10,3	69,9	114,3	392 417	28,575	69,9	57,2	6,35	31,4
132 132 132	S - M/MA	- SH MH/LH	- SP MP	213 T 213 T 215 T	215,90	58,5	260	139,7 177,8 177,8	37	180 218 218	17,5	20,7	10,3	88,9	133,4	459 497 497	34,925	85,7	77,8	7,92	38,4

* + Standard

B14

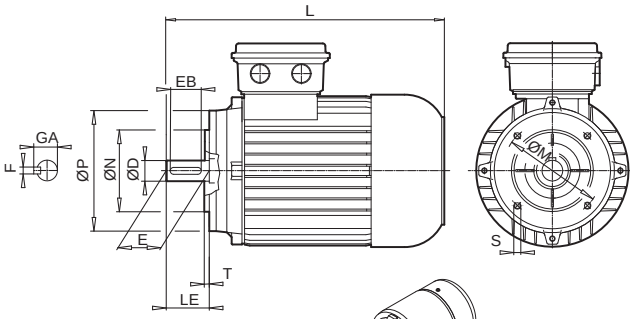

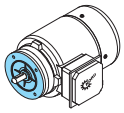
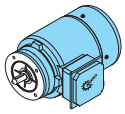
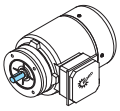

Type B14	IE1*	IE2	IE3	NEMA	[mm] M	N 0 -0,076	P	S	T	L	LE	D 0 -0,013	E	EB	F	GA
63	S/L	-	-	56 C	149,3	114,3	165	3/8 - 16	4,1	244	52,3	15,875	47,6	42,9	4,78	17,9
71	S/L	-	-	56 C	149,3	114,3	165	3/8 - 16	4,1	267	52,3	15,875	47,6	42,9	4,78	17,9
80	S/L	SH/LH	LP	56 C 143 TC	149,3	114,3	165	3/8 - 16	4,1	292 294	52,3 53,8	15,875 22,225	47,6 57,2	42,9 46,1	4,78	17,9 24,4
90	S/L	SH/LH	SP/LP	145 TC	149,3	114,3	165	3/8 - 16	4,1	334	53,8	22,225	57,2	46,1	4,78	24,4
100 100	L LA	LH AH	LP AP	182 TC 184 TC	184,2	215,9	229	1/2 - 13	6,4	377	66,5	28,575	69,9	57,2	6,35	31,4
112 112	M -	SH MH	- MP	184 TC	184,2	215,9	229	1/2 - 13	6,4	392 417	66,5	28,575	69,9	57,2	6,35	31,4
132 132	S M	SH MH/LH	SP MP	213 TC 215 TC	184,2	215,9	229	1/2 - 13	6,4	497	79,2	34,925	85,7	77,8	7,92	38,4
160 160 160	M/L L -	MH - LH	MP - LP	254 TC 256 TC 256 TC	184,2	215,9	254	1/2 - 13	6,4	587 587 631	95,3	41,275	101,6	79,4	9,53	45,5
180 180	MX LX	- -	- -	284 TC 286 TC	228,6	266,7	286	1/2 - 13	6,4	603 647	111,2	47,625	117,5	101,6	12,7	53,1

* + Standard

Notes

Excerpts from the NORD range

G1000 Fixed speeds
UNICASE housing 50 Hz, 60 Hz

- Helical geared motors
- Parallel geared motors
- Bevel geared motors
- Contrate worm gear motors

G1012 NORDBLOC 50 Hz

- Helical geared motors

G1050 Industrial gear units

G1001 Explosion protected drive units

- Category 2G, Zone 1, gas

G1022 Explosion protected drive units

- Category 3D, Zone 22, dust

F3020 Frequency inverter SK200E
F3050 Frequency inverter SK500E
F3070 Frequency inverter NORD SK700E

Intelligent Drivesystems, Worldwide Services

IE2 have a greater efficiency than the previous EFF2 motors.

IE2 motors produce less waste heat.

IE2 motors have a longer operating life than previous normal motors.

IE2 motors help to reduce operating costs.

NORD IE2 motors have an "extended operating range", which means that no safety reserves, or lower safety reserves need to be taken into account for the design of the drive unit.

DE Getriebebau NORD GmbH & Co. KG, Rudolf-Diesel-Str. 1, D-22941 Bargteheide
Tel.: +49 (0) 45 32 / 401 - 0 , Fax:+49 (0) 45 32 / 401 - 253, info@nord.com

GB NORD GEAR LTD., 11 Barton Lane, Abingdon Science Park, OX14 3NB Oxfordshire
Tel.: +44-1235-534404, Fax +44-1235-534414, info@nord-uk.com

NORD DRIVESYSTEMS

Mat.-Nr. 6000602/2013