Intelligent Drivesystems, Worldwide Services

GB

G1050

Industrial gear units SK 7207 – SK 15507

NORD DRIVESYSTEMS

Overview of Products and Catalogues

SI worm gear units (Catalogue G1035)

- ✓ Modular
- ✓ Universal mounting
- ✓ IEC versions
- ✓ Die-cast aluminium housing

Sizes	5
kW	0.12 – 4.0
Nm	21 – 427
i	5.00 : 1 – 10,000.00 : 1

SMI worm gear units (Catalogue G1035)

- ✓ Smooth surfaces
- ✓ Shaft, foot or flange mounted

Sizes	5
kW	0.12 – 4.0
Nm	21 – 427
i	5.00 : 1 – 10,000.00 : 1

Helical worm gear units (Catalogue G1000)

- ✓ Shaft. foot or flange mounted
- ✓ Hollow or solid shaft
- ✓ UNICASE housing

Sizes	6
kW	0.12 – 15
Nm	46 – 3,090
i	4.40 : 1 – 7,095.12 : 1

3-stage bevel gear units (Catalogue G1000)

- ✓ Up to 95 % efficiency
- ✓ Shaft. foot or flange mounted
- ✓ Hollow or solid shaft
- ✓ UNICASE housing

Sizes	11
kW	0.12 – 200
Nm	180 – 50,000
i	8.04 : 1 – 13,432.68 : 1

Parallel shaft gear units (Catalogue G1000)

- ✓ Shaft, foot or flange mounted
- ✓ Hollow or solid shaft
- ✓ Compact design
- ✓ UNICASE housing

Sizes	15
kW	0.12 – 200
Nm	65 – 90,000
i	4.03 : 1 – 6,616.79 : 1

Higher performance, lower weight – the new bevel gear unit from NORD DRIVESYSTEMS.

NORDBLOC.1 2-stage bevel gear units (Catalogue G1014)

- ✓ Up to 97% efficiency
- ✓ Shaft, foot or flange mounted
- ✓ Hollow or solid shaft
- ✓ UNICASE housing
- ✓ Die-cast aluminium housing

Sizes	5
kW	0.12 – 9.2
Nm	90 – 660
i	3.55 : 1 – 70 : 1

2-stage bevel gear units (Catalogue G1000)

- ✓ Up to 97% efficiency
- ✓ Shaft, foot or flange mounted
- ✓ Hollow or solid shaft
- ✓ Alternative to worm gear motors
- ✓ UNICASE housing

Sizes	5
kW	0.12 – 9.2
Nm	45 – 650
i	3.85 : 1 – 72.31 : 1

Helical gear units (Catalogue G1000)

- ✓ Foot or flange mounted
- ✓ UNICASE housing

Sizes	11
kW	0.12 – 160
Nm	23 – 23,160
i	1.24 : 1 – 14,340.31 : 1

NORDBLOC. Single stage helical gear units (Catalogue G1012)

- ✓ Foot or flange mounted
- ✓ Die-cast aluminium housing (5 sizes)
- ✓ UNICASE housing
- ✓ Dimensions compliant with industrial standards

Sizes	8
kW	0.12 – 37
Nm	55 – 3,300
i	2.10 : 1 – 456.77 : 1

Overview of Products and Catalogues

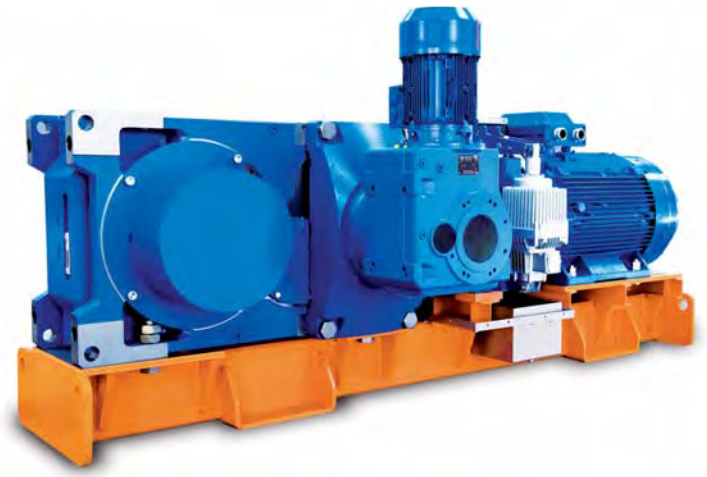

Industrial gear units (Catalogue G1050)

- ✓ All bearing points and sealing surfaces are machined in one operation
- ✓ No separating joints in the housing, no sealing surfaces subject to torque
- ✓ High-precision axis alignment, quiet running
- ✓ Long life, low maintenance service
- ✓ Short, compact design
- ✓ Gear ratios from 5.54 to 1.600: 1 with the same foot dimensions
- ✓ Parallel axis and right-angled gear units

Sizes	8
kW	2.2 – 1,000
kNm	25/31/42/51/74/101/141/242
i	5.54:1 – 1,600:1

IE1/IE2/IE3 motors and components for decentralised drive control (Catalogue M7000)

- ✓ Single and 3-phase electric motors
- ✓ Further range of starters and components for decentralised drive control.

Frequency inverter SK 200E (brochure F3020)

- ✓ "Safe stop" as per EN 954-1
- ✓ Commissioning via integrated DIP switches and potentiometer possible
- ✓ Energy-saving function
- ✓ Ethernet-based BUS systems
- ✓ Performance grading according to application
- ✓ Decentralised modules combined as a system
- ✓ Integrated "Posicon" positioning control
- ✓ On board AS interface versions

Sizes	4
U[V]	1~100 … 120±10% 1~200 … 240±10% 3~200 … 240±10% 3~380 … 500 -20% / +10%
P[kW]	0.25 –22

Frequency inverter SK 500E (brochure F3050)

- ✓ Compact design
- ✓ Energy-saving function
- ✓ Performance grading according to application (e.g. "Posicon" positioning control)
- ✓ Plug-in modules for control and communication (field bus)
- ✓ Ethernet-based BUS systems

Sizes	10
U[V]	1~110 … 120±10% 1/3~200 … 240±10% 3~200 … 240±10% 3~380 … 480 -20% / +10%
P[kW]	0.25 – 90 up to 132 in preparation

NORD WORLDWIDE

Global presence

- **NORD** has subsidiaries in 35 countries
- With its representatives **NORD**is present in over 52 countries
- Service and sales partners
- Technical support
- Support for installation and commissioning
- Spare parts management

NORD DRIVESYSTEMS with its headquarters in Bargteheide near Hamburg and subsidiaries in 35 countries is a global company with an extensive range of products and services for electrical, mechanical and electronic drive technology.

With a staff of approx. 2900 in its German factories and international production facilities, NORD produces and distributes drive technology for the global market.

The design of user-specific drive solutions with close customer support from the planning phase right up to commissioning is what makes NORD a strong and dependable partner.

We consider 24-hour service, fast availability and being close to our customers to be both a responsibility and an obligation, just as you can expect from a leading drive manufacturer such as NORD.

PRODUCTION SITES

NORD headquarters,
Bargteheide

NORD Electronic DRIVESYSTEMS
Aurich

Zahnradwerk NORD
Glinde

NORD Production Technology
Gadebusch

SOME OF OUR OVERSEAS PRODUCTION FACILITIES

Vieux Thann
France

Nowa Sol
Poland

Waunakee, Wisconsin
USA

Suzhou
China

Contents

Contents

Contents

DESCRIPTION OF GEAR UNITS

The NORD industrial gear unit was developed according to the tried-and-tested unicase principle. “UNICASE” designates a unitary housing block in which all bearing seats are integrated. The UNICASE is machined in a single setup on the very latest CNC machines. The unicase concept features extreme precision, rigidity and strength. There is no joint between the output side and the gear unit, which is subject to radial forces or torque.

The UNICASE principle enables a more compact design and the use of larger roller bearings, which guarantee a long operating life. Ease of service of the gear unit is ensured by a large assembly cover on the face plate of the gear unit.

The housings are made of cast iron. Cast iron with spheroidal graphite can be supplied on request.

The gears are made of high alloy steels and case hardened. Optimised geometries and precise shaft alignment due to the UNICASE provide excellent load-bearing capacity, long operating life and low noise. The gearing, bearings and shafts are calculated according to DIN 3990, DIN 3991, DIN ISO 281 and DIN 743 for all powers and speeds in this catalogue. All NORD gear units therefore provide the very highest levels of safety and reliability.

The bearings and gears run in an oil bath. Oil circulation lubrication is available as an option. In addition to positive parallel key fitting, the gears also have a press-fit between the shaft and the hub.

Standard shaft seals are NBR quality. As an option, the use of shaft sealing rings made from FKM (Viton) is possible.

For special ambient conditions, other sealing systems such as gamma-ring seals, labyrinth seals and Taconite seals are available. Please contact us if you require other specialised sealing systems.

Vertical and horizontal installation positions

For the determination of the thermal limits for standing and vertical installation positions (M2, M4, M5, M6) consultation with NORD is required.

For vertical shafts the gear units are filled with appropriate oil quantities and for particular types equipped with specially sealed, grease-lubricated bearings. This results in a higher temperature rise of the gear units.

NORD recommends to use an oil circulation lubrication system to avoid such higher temperature rise due to increased oil-splashing.

For vertical and top mounted motors (installation position M4) and gear ratios <20, oil expansion chambers are strongly recommended, in order to prevent the escape of oil through the air vent. Please contact us, so that we can suggest a solution adapted to your particular drive application.

Outdoor installation

When installed outdoors, in damp rooms, or when used in the tropics, special seals and anti-corrosion measures are required. Please inform us of such use when ordering.

Special ambient conditions

In case of special ambient conditions, including during transport or storage prior to commissioning, these should be taken into account in the planning stage of the project. Please contact us.
Special ambient conditions include, e.g.:

- aggressive or corrosive substances in the environment (e.g. contaminated air, gases, acids, alkalis, salts etc.)
- Very high humidity, or contact of the gear unit motor with liquids
- Severe dirt, dust or sand deposits on the gear unit motor
- Severe fluctuations of air pressure
- Radiation
- Extremely high or low ambient temperatures or rapid changes in temperature
- Vibrations, accelerations, shocks, blows or other abnormal ambient conditions

Storage before commissioning

Prior to commissioning the gear units and geared motors must only be stored in dry rooms. For longer periods of storage, special measures are necessary. If required, please request the special instruction leaflet "Long-term Storage".

Ventilation

As standard the gear units have a vent which compensates for damaging differences in air pressure between the interior of the gear unit and the environment. On delivery this vent is closed. Prior to commissioning, the vent must be activated by removing the sealing plug. Pressure relief vents are available as an option.

Drives for ventilators, agitators, mixers and fans

Usually severe operating conditions apply for applications such as ventilators, agitators and mixers e.g. in water treatment plants and process technology as well as fan drives in cooling towers.

- 24-hour continuous operation at nominal torque or nominal power
- Large inertia at the output with low transmission ratios
- Vibrations in the drive chain, and with direct positioning of the mixer or fan shaft in the gear unit, high oscillating bending moments and forces on the drive shaft
- Vertical configuration
- Outdoor installation, i.e. humidity and aggressive media, as well as severe changes in temperature with the formation of condensation
- High environmental protection is required, i.e. complete sealing, safe oil servicing and a low noise level.

From experience, NORD has developed a package of special measures to cater for these special conditions of use. Therefore NORD urgently recommends that these special measures are provided. Please contact us.

SELECTION OF GEAR UNITS

The following important instructions on selection of gear units must be strictly observed otherwise overloading of the drive is probable. In this case the warranty is void.

Workflow

The following diagram should be of assistance in selecting the gear unit.
The individual steps are then described in detail.

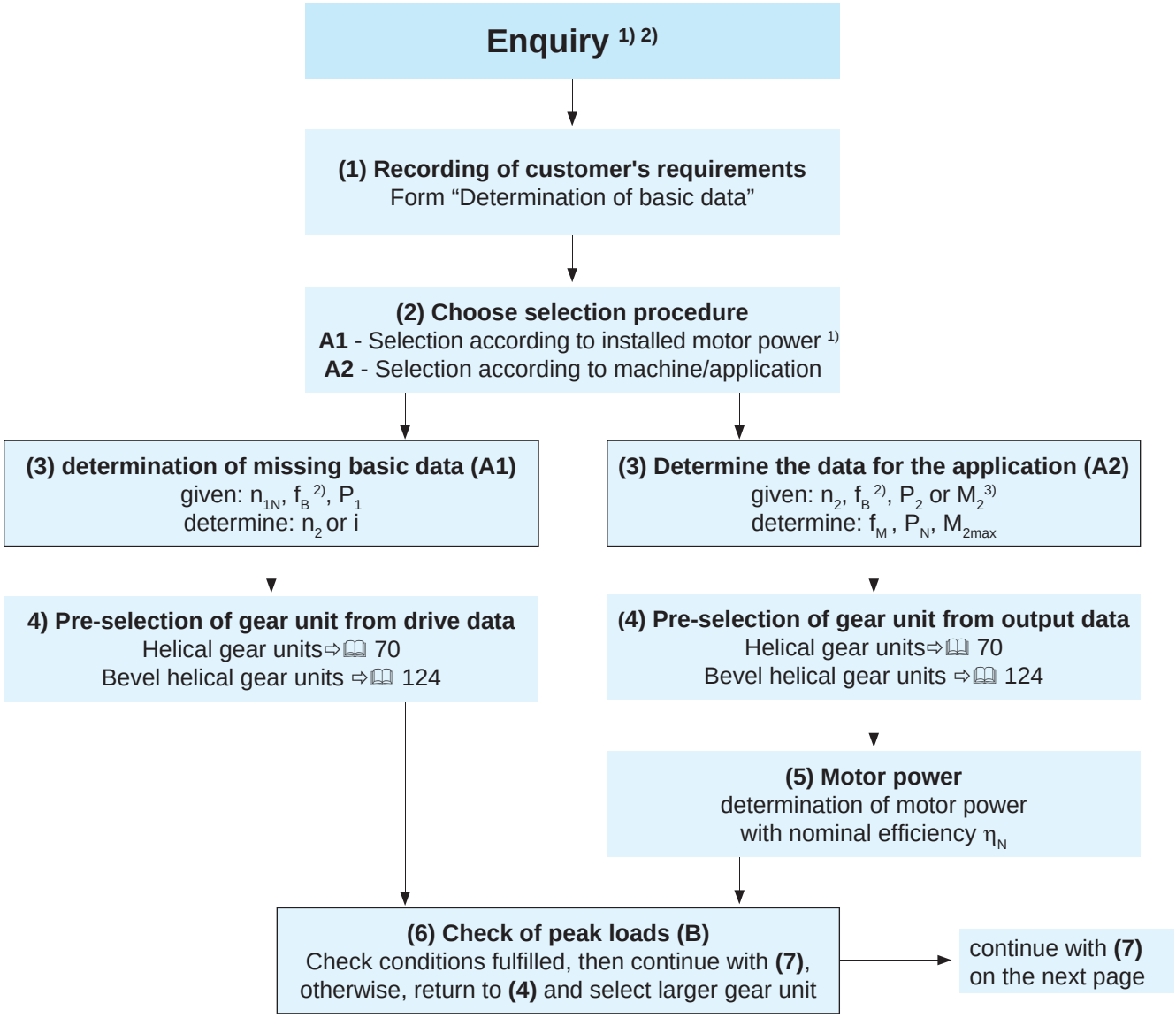

Continued from previous page

(7) Check of thermal power limit (C):
Calculation of thermal power limit

$$P_{WG} = P_{t0.20} \cdot f_t \cdot f_v \cdot f_H \cdot f_{ED} \cdot f_Ö \cdot f_A + P_{tF.20} \cdot f_L \cdot f_H \cdot f_n + P_{tC.20} \cdot f_w + P_{CS}$$

(8) Additional forces on input and output (F_R, F_A)
Please consult us if the additional external forces exceed the stated values

(9) Gear unit designs and additional options

- Shaft types and positions
- Motor coupling, coupling,
- Drive package for belt drives,
- Oil drain tap, oil level indicator
- Alternative sealing system
- Auxiliary drive unit, brakes
- Status monitoring
- Surface protection and final colour
- etc.

(10) Documentation
Summary of technical information Quantity and required delivery date

Note on workflow:

[1] Description of factors (⇨📖12; 25-27)
[2] Description of abbreviations (⇨📖12-13)
[3] Only permissible for standard ambient conditions (⇨📖15)
[4] Specified or according to applications table (⇨📖20)
[5] Variable loads at constant speeds must be converted to an average torque

Determination of basic data (specification)

Customer: _____

Contact person _____

Tel.: _____ E-mail _____

Field of application / Industry [1] Country

_____ _____

Application [1] **Quantity**

_____ _____

Gear unit type

- ☐ Helical gear unit SK .. 207 / SK.. 307
- ☐ Bevel helical gear units SK .. 407 / SK ..507

Installation environment of gear unit

- ☐ Small space ($v_L \geq 0{,}5$ m/s)
- ☐ Large rooms and halls ($v_L \geq 1{,}4$ m/s)
- ☐ Outdoors, shaded from sun ($v_L \geq 3$ m/s)

Ambient conditions

- ☐ Normal ☐ Corrosive
- ☐ Dusty ☐ Dry
- ☐ Damp/wet ☐ Sea water ☐ _____

Required output speed n_2 [rpm]

Normal _____ Min. _____ Max. _____

Drive speed n_1 [rpm]

Normal _____ Min. _____ Max. _____

Speed ratio

Target _____ Min. _____ Max. _____

Operating power of drive P_1 [kW]

Normal _____ Min. _____ Max. _____

Operating torque of drive M_2 [kNm]

Normal _____ Min. _____ Max. _____

Required operating factor f_{Bmin} _____

with reference to the

- ☐ Motor power P_M / motor torque M_M
- ☐ Operating power P_2 / operating torque M_2

Ambient temperature [°C]

Normal _____ Min. _____ Max. _____

Installation altitude [m] _____ above sea level

Required bearing life $L_{h\,min}$

_____ hours

Time of operation/day

- ☐ ≤ 0,5 hours
- ☐ 0,5...10 hours
- ☐ > 10 hours

Switch-on time _____%

Frequency of peak loads /Number of start-ups

_____ per hour

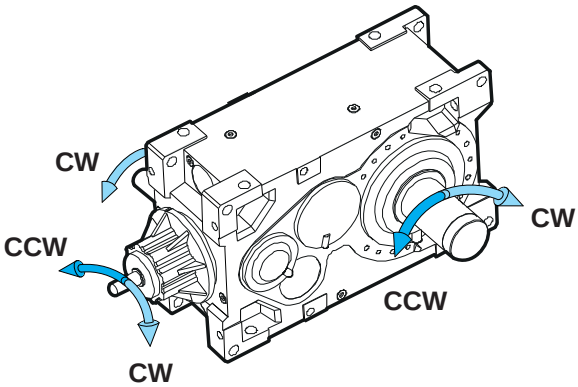

Direction of rotation under load (output, plan view)

- ☐ Single direction ☐ CW ☐ CCW
- ☐ Both directions
- ☐ Reversible

Backstop required

- ☐ Yes ☐ No

Shaft positions

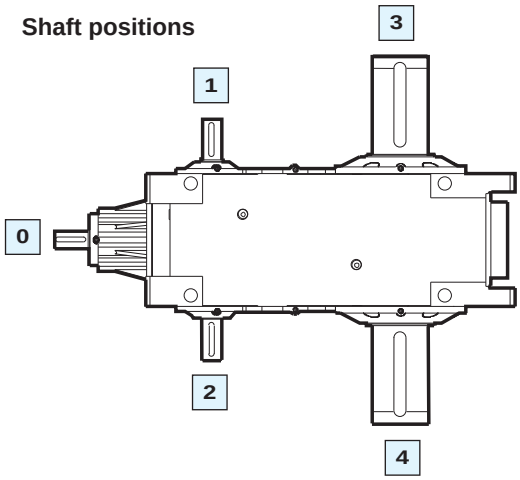

Position [2]

- ☐ M1 ☐ M4
- ☐ M2 ☐ M5
- ☐ M3 ☐ M6

Mounting surface [3]

- ☐ F1 ☐ F4
- ☐ F2 ☐ F5
- ☐ F3 ☐ F6

[1] see catalogue G1050 ⇨ 📖 20
[2] see catalogue G1050 ⇨ 📖 68
[3] see catalogue G1050 ⇨ 📖 70

Drive type:

☐ Three-phase motor

☐ Other _____

Frequency inverter operation

☐ Yes ☐ No

If electric motor:

☐ IEC ☐ NEMA ☐ Size: _____

Motor version

☐ B3 (foot-mounted) ☐ B5 (flange) ☐ other _____

Connection of motor to gear unit

☐ Free shaft end

☐ Motor adapter with elastic coupling

☐ Motor swing base/Base frame

☐ Other, see sketch _____

Coupling on output side

☐ Elastic coupling

☐ Flexible coupling

☐ Other _____

Gear unit attachment

☐ Foot

☐ Flange

☐ Torque support

☐ other _____

Output shafts

☐ Solid shaft with parallel key groove

☐ Hollow shaft with parallel key groove

☐ Hollow shaft with shrink disk

☐ Other, see sketch _____

Machine shaft bearing

☐ Two bearings, gear unit only transmits torque

☐ Other, see sketch _____

Axial and radial forces

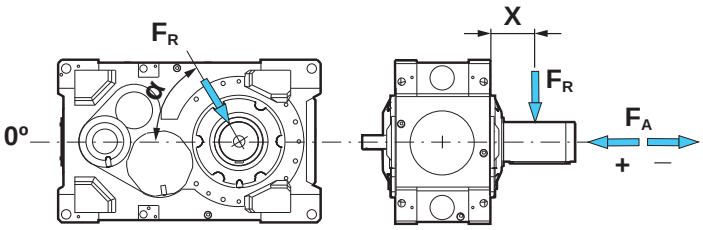

Drive: _____

Output: _____

Permissible cooling (if necessary)

	approved	not approved
Fan	☐	☐
Cooling cover / cooling cartridge	☐	☐
External oil/air cooler	☐	☐
External oil/water cooler	☐	☐

Cooling water available Yes ☐ No ☐

Cooling water temperature _____ °C

Type of cooling water (sea water, pond water, ...)

_____

ATEX explosion protection

Explosion protection necessary Yes ☐ No ☐

To be filled in by NORD staff for ATEX

Enquiry No. _ _ - _ _ _ _ _ _ - _ _ _ _ **- 0** _ _ _

Country - Year Month Day - Hour Minute Dictation ref.

FURTHER INFORMATION:

_____

_____

_____

_____

_____

_____

_____

Factors for gear unit design

Abbreviations	Description	Used for
f_B	Operating factor	Pre-selection of gear unit
f_S	Peak load factor	Load limit
f_{AN}	Start-up factor	Load limit
f_M	Input factor	Load limit
η_N	Nominal efficiency for design	Selected motor size
f_A	Utilisation factor	Thermal power limit
f_n	Speed factor	Thermal power limit
$f_Ö$	Oil supply factor	Thermal power limit
f_t	Temperature factor for gear unit	Thermal power limit
f_w	Temperature factor for water cooling	Thermal power limit
f_L	Temperature factor for fan cooling	Thermal power limit
f_v	Installation factor	Thermal power limit
f_H	Altitude factor	Thermal power limit
f_U	Ambient temperature	Thermal power limit
f_{BF}	Operating factor for transverse and axial forces	Radial and axial forces
f_Z	Transfer element	Radial and axial forces

Abbreviations in the power and selection tables

Abbreviations	Description	Unit
f_B	Operating factor (M_{2max} / M_2)	[-]
$P_{tF.20}$	Thermal power limit with fan under standard ambient conditions	[kW]
i_{tot}	Total speed ratio	[-]
CS	Adequate cooling system for standard ambient conditions	[-]
n_{1N}	Nominal drive speed	[min^{-1}]
n_{2N}	Nominal output speed	[min^{-1}]
t_u	Ambient temperature on gear unit	[°C]
M_{2max}	Maximum permissible output torque	[kNm]
J_{red}	Moment of inertia relative to drive shaft	[kgm^2]
P_1	Input power of gear unit	[kW]
P_N	Nominal power of gear unit	[kW]
P_{tF}	Thermal power limit with fan for n_{1N}=1500 min^{-1}	[kW]
P_{tCC}	Thermal power limit with integrated water cooling	[kW]
kg	Weight of gear unit without motor	[kg]

Abbreviations for gear unit selection

Abbreviations	Description	Unit
n_1	Input speed	[min^{-1}]
n_{1N}	Nominal drive speed	[min^{-1}]
n_2	Output speed	[min^{-1}]
i_{tot}	Exact ratio	[-]
i_N	Nominal ratio stepped according to standard series	[-]
i_{nom}	Nominal ratio	[-]
P_1	Installed motor power	[kW]
P_2	Output power	[kW]
M_2	Output torque	[kNm]
M_{2max}	Nominal output torque	[kNm]
M_{1Peak}	Peak-load torque of motor	[kNm]
M_{2Peak}	Peak-load torque of machine	[kNm]
$P_{t0.20}$	Thermal power limit by convection under standard ambient conditions	[kW]
$P_{tF.20}$	Thermal power limit with fan under standard ambient conditions	[kW]
$P_{tC.20}$	Thermal power limit with water cooling under standard ambient conditions	[kW]
P_{tCS}	Thermal power limit with cooling unit	[kW]
P_{WG}	Total thermal power limit for gear unit with cooling options	[kW]
d_o	Effective diameter	[mm]
x	Distance from shaft collar to point of action of force	[mm]
α	Angle of attack of existing radial force	[°]
F_{Rpres}	Radial force on gear unit output shaft	[kN]
F_A	Permissible axial force on output side	[kN]
F_R	Permissible radial force on output side, point of action of force at centre of end of shaft	[kN]

Gear unit selection procedure

NORD provides two methods of determining a suitable gear unit for the particular application. Three selection steps are necessary:

A) Pre-selection of gear unit (two methods)

B) Check of peak loads

C) Checking the thermal power limit

The following ambient conditions are specified as standard:

- Ambient temperature: 20°C
- Air circulation at installation location large hall with good air circulation ($v_L \approx 1.25$ m/s)
- Installation: Foundation steel sub-construction
- Installation altitude: ≤ 1000m above sea level
- Installation position Horizontal installation (M1 or M3)
- Type of lubrication: Oil-bath lubrication ((immersion lubrication)
- Cooling water inlet temperature: 20°C

The data in the selection tables are permissible for input speeds up to n_{1N} = 1800 min^{-1}, for speeds in excess of these, consultation with NORD is necessary. For speeds n_1 < 1000 min^{-1}, n_1 = 1000 min^{-1} may be used for selection.

Selection of gear unit according to installed motor power (A1)

Selection of the gear unit according to the installed motor power P_1 is a simplified procedure, which assumes asynchronous three-phase motors manufactured by NORD, and which can also be used for technically equivalent motors. In case of doubt, procedure (A2) should be used. For the use of other motors, please contact NORD.

Specifications:

- Nominal motor speed $\mathbf{n_{1N}}$ = 1500 min^{-1} (alternative: $\mathbf{n_{1N}}$ = 1000 min^{-1})
- Drive speed $\mathbf{n_2}$ or required gear ratio $\mathbf{i_{nom}}$
- Motor power $\mathbf{P_1}$ (installed motor power!)
- Required operating factor $\mathbf{f_B}$

Consultation with NORD is required in case lower operating factors than specified in table ⇨📖 20 are to be used.

With this data, the selection of the gear unit according to motor power ($\mathbf{P_1}$) and application factor ($\mathbf{f_B}$) can be made.

The performance tables are based on the rounded nominal speeds n_{1N} and the nominal efficiency η_N = 1.0.

The precise calculation for the motor cable (P_1) is described in the following chapter

Selection of parallel shaft gear units ⇨📖 78

Selection of right-angled gear units ⇨📖 124


Selection of gear units via the requirements of the machine / application (A2)

Specifications:

- Nominal motor speed $\mathbf{n_{1N}}$ = 1500 min^{-1} (alternative: $\mathbf{n_{1N}}$ = 1000 min^{-1})
- Drive speed $\mathbf{n_2}$ or required gear ratio $\mathbf{i_{nom}}$
- Torque for application ($\mathbf{M_2}$) or the drive output of the gear unit ($\mathbf{P_2}$) are known
- Collective loads **<u>with constant speed</u>** can be converted to an average torque for selection purpose according to the following formula:

$$M_2 = \sqrt[6,6]{(M_{2.1})^{6,6} \cdot \frac{t_1}{t_{ges}} + (M_{2.2})^{6,6} \cdot \frac{t_2}{t_{ges}} + \ldots + (M_{2.n})^{6,6} \cdot \frac{t_n}{t_{ges}}}$$

with	$M_{2.1} \ldots M_{2.n}$	- various torques
	$t_1 \ldots t_n$	- time period for load
	t_{tot}	- total of time periods

Selection:

Application: Application factor $\mathbf{f_B}$ ⇨📖20

Drive machine: Drive factor $\mathbf{f_M}$ ⇨📖25

With this data, drive unit selection according to torque $\mathbf{M_{2max}}$ or drive output $\mathbf{P_N}$ can proceed.

$$M_{2max} \geq M_2 \cdot f_B \cdot f_M \quad \text{or} \quad P_N \geq P_2 \cdot f_B \cdot f_M$$

$\mathbf{M_{2max}}$	Maximum output torque [kNm]
$\mathbf{P_N}$	Nominal output power [kW]

Selection of parallel shaft gear units ⇨📖 78

Selection of right-angled gear units ⇨📖 124

The required motor power can be determined from the nominal efficiency (η_N ⇨📖) of the selected drive unit according to

$$P_1 \geq \frac{M_2 \cdot n_{1N}}{9.55 \cdot i_N \cdot \eta_N}$$

$\mathbf{P_1}$	Motor power	[kW]
$\mathbf{n_{1N}}$	Nominal input speed	[min^{-1}]
$\mathbf{i_N}$	Nominal gear ratio	[-]

If necessary, the installed motor power can be rounded up to the next standard power. The maximum output torque $\mathbf{M_{2max}}$ must not be exceeded

$$M_{2max} \geq \frac{9.55 \cdot P_1 \cdot i_{tot} \cdot \eta_N \cdot f_B \cdot f_M}{n_1}$$

$\mathbf{n_1}$	Motor speed	[min^{-1}]
$\mathbf{i_{tot}}$	Exact ratio	[-]

Check of peak loads (B)

In the second step, the gear unit selected under (A1) or (A2) is checked as to whether the expected peak loads are permissible. For installed drive brakes e.g. brake motors, the brake torque must be considered for the selection of the gear unit.

Specifications:

- Peak load torque at the input (M1Peak) due to start-up and brake actions
- Peak load torque at drive output (M2Peak) by the application due to load fluctuations

Calculation of peak load torque:
The peak load torques are the highest torques which occur. A check as to whether these peak loads are permissible is performed according to the calculation below.

a) Drive side / Motor:
With the peak load factor $\mathbf{f_S}$ (⇨📖25) the following conditions for checking result:

$$M_{2max} \geq M_{1Peak} \cdot i_{tot} \cdot \eta_N \cdot f_S$$

$\mathbf{M_{1Peak}}$ Peak-load torque of motor [kNm]

Often, the peak load torque M_{1Peak} at the output is not known. This can be taken into account via the start-up factor $\mathbf{f_{AN}}$ (⇨📖25) as follows:

$$M_{2max} \geq \frac{P_1 \cdot 9.55 \cdot i_{ges} \cdot \eta_N}{n_1} \cdot f_{AN} \cdot f_S$$

b) Output side / Application / Machine:

$$M_{2max} \geq M_{2Peak} \cdot f_S$$

$\mathbf{M_{2Peak}}$ Peak-load torque of machine [kNm]

If one of the above conditions does not apply, the peak load torques are too high or the gear unit is too small. A larger gear unit must be selected.

Checking the thermal power limit (C):

The thermal power limit states the permissible power which the gear unit can transmit over long periods (3h) without exceeding the permissible oil temperature.

If the gear unit was selected according to the installed motor power (A1), the thermal power limit by free convection under the standard ambient conditions can be read off directly in the power tables (⇨📖 86ff) in the column Pt0.20.

If the transferred power is greater, the necessary cooling system size (A to H) or the option FAN is additionally listed in the column CS. If both options are listed, they can be used as alternatives.

For gear unit selection according to method A2, the thermal power limit values are to be taken from the tables.

Helical gear units ⇨📖 79

Bevel helical gear unit ⇨📖 125

For the standard ambient conditions listed above, the following thermal power limits can be read off directly:

- Thermal power limit with free convection (Pt0.20)
- Additional thermal power limit with fan (PtF.20)
- Additional thermal power limit with integrated water cooler (PtC.20)

The total thermal power limit of a gear unit results from the addition of the individual values (⇨📖63)

Differing ambient conditions can be taken into account by means of factors as follows:

$$P_{WG} = P_{t0.20} \cdot f_t \cdot f_v \cdot f_H \cdot f_{ED} \cdot f_Ö \cdot f_A$$
(Gear unit with free convection)

$$+ \; + P_{tF.20} \cdot f_L \cdot f_H \cdot f_n$$
(Additionally with fan)

$$+ \; P_{tC.20} \cdot f_w$$
(Additionally with integrated cooling coil)

$$+ \; P_{CS} \cdot f_w \text{ bzw. } + P_{CS} \cdot f_L$$
(Additionally with external cooling unit)

mit $P_{CS} = Q_{CS} / (1 - \eta_N)$,
Q_{CS} is the cooling power of the cooling unit.

The conversion factors for other ambient conditions are listed in the tables from ⇨📖 25 onwards.

The determined total thermal power limit must be greater than the power transmitted by the gear unit.

$$P_{WG} > P_M \text{ UND } P_{WG} > P_1$$

It is in our mutual interest to avoid problems. In case of critical or unclear application conditions please consult NORD.

Important information regarding thermal power limits:

Please consult us if no factors are available for the ambient conditions of your application.

We recommend consultation with NORD and a more precise check of the application if two or more of the following points apply:

- Vertical or upright configuration (installation position M2, M4, M5 oder M6 ⇨📖 68)
- Drive power $P_1 > 500$ kW
- Speed ratio $i_{ges} < 12$ (for bevel gear units $i_{ges} < 24$)
- Input speeds $n1 > 1500$ min^{-1}
- Ambient temperature > 40°C

For installation outdoors, adequate shading from the sun must be provided. If this is not possible, please consult us.

In general, please consult NORD if there are special installation conditions, e.g. enclosing of the gear unit, heat radiation, installation in confined spaces etc. Special measures are available to prevent thermal overload (oil coolers etc).

The thermal power limit is also influenced by the following factors, which should considered for the correct selection of the gear unit.

- Heat transfer to adjoining surfaces
- Mechanical loading of the gear unit
- Type of gear unit
- Speed ratio
- Input speed
- Size
- Lubricant used
- Height of oil level
- Switch-on time
- Additional cooling systems

Radial and axial forces

The radial force tables list the permissible radial forces F_R which may act on the journals of the drive shafts.

NORD must be consulted if axial forces F_A occur. The stated radial forces apply for foot-mounted gear units and installation position M1 with solid shaft.

The force details are based on an operating factor of f_B =1.3 for the gear unit and radial forces f_{BF} =1. For suddenly applied forces and long running periods (> 8 hours/day) an appropriate operating factor f_{BF} >1 must be taken into consideration. The permissible radial forces F_R are then reduced accordingly.

The radial forces refer to a point of action of the force at the midpoint of the shaft length. For the determination of the permissible radial forces, the most unfavourable direction of application of the force and direction of rotation were assumed.

Higher radial forces are normally possible! For a precise calculation, please provide details of the actual direction of the force and direction of rotation, as well as the required lifespan.

If transmission elements are attached to the output shaft, the corresponding factor (f_z) must be applied for the determination of the radial forces which occur.

Radial force factor f_z

Transmission elements	f_z	Notes
Gear wheels	1.1	z ≤ 17 teeth
Chain wheels	1.4	z ≤ 13 teeth
Chain wheels	1.2	z ≤ 20 teeth
Narrow V-belt pulleys	1.7	through pre-tensioning force
Flat belt pulleys	2.5	

The radial force on the output shaft is determined as follows:

$$F_{Rvorh} = \frac{2 \cdot M_2}{d_o} \cdot f_z \leq F_R$$

F_{Rpres}	Radial force on gear unit output shaft	[kN]
F_R	Permissible radial force according to speed and power tables	[kN]
M_2	Gear unit output torque	[Nm]
f_z	Radial force factor from the table	
d_o	Effective diameter	[mm]

For application of force other than at the midpoint of the shaft and on the drive shaft (e.g. due to a belt drive or gear wheel on the input) consultation with NORD is necessary.

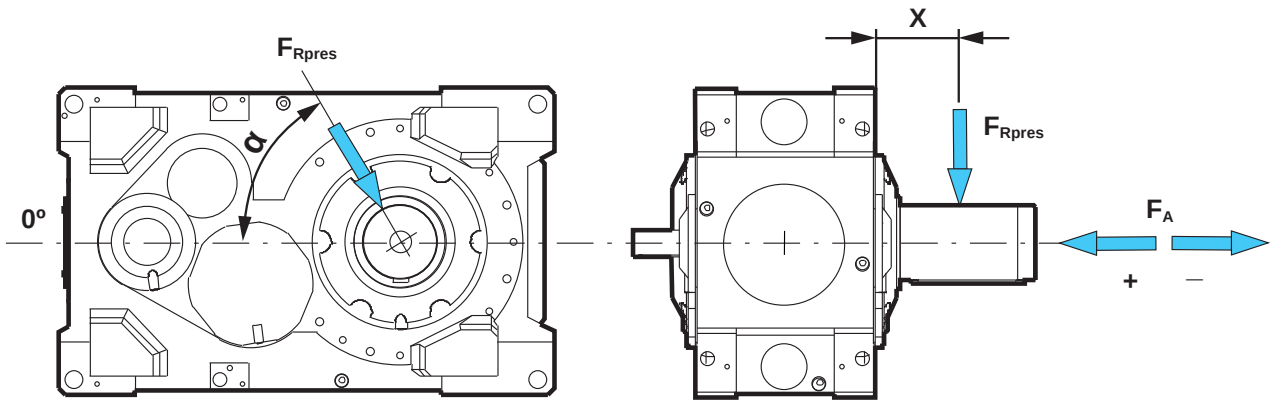

Table of radial forces: helical gear units

Gearbox size Speed n_2		F_R [kN] ..207 < 125 min $^{-1}$		..307 < 70 min $^{-1}$		..307 < 20 min $^{-1}$	
Bearings	**x [mm]**	Normal	VL	Normal	VL	Normal	VL
SK 7..	147	3	36	11	54	25	67
SK 8..	147	1	34	8	53	21	64
SK 9..	195.5	104	114	111	111	112	112
SK 10..	195.5	104	109	95	95	97	97
SK 11..	210	86		71		72	
SK 12..	235	115		144		152	
SK 13..	283	154		160		160	
SK 15..	275	102		155		160	

Table of radial forces: bevel gear units

Gearbox size Speed n_2		F_R [kN] ..407 < 125 min $^{-1}$		..407 < 70 min $^{-1}$		..507 < 20 min $^{-1}$	
Bearings	**x [mm]**	Normal	VL	Normal	VL	Normal	VL
SK 7..	147	8	44	9	48	39	67
SK 8..	147	6	44	7	47	37	63
SK 9..	195.5	120	120	114	114	111	111
SK 10..	195.5	116	116	105	105	95	95
SK 11..	210	99		79		63	
SK 12..	235	131		147		148	
SK 13..	283	160		160		160	
SK 15..	275	160		160		160	

Design factors

Operating factors f_B

The operating factor prescribes the minimum safety factor for various applications, which takes into account the usual conditions for the particular applications. If customer operating factors are known for the application, these should be used, if they are not less than the NORD values. If no values are available for the application, consultation with NORD is necessary, in order to jointly determine suitable operating factors.

Operating factors - f_B			
Application	Actual time of use under load per day (hours)		
	≤ 0.5	> 0.5...10	> 10
WASTE WATER			
Concentrator (central drive)	1.15	1.25	1.50
Filter presses	1.00	1.30	1.50
Vacuum filter	1.15	1.30	1.50
Flocculation agitator	0.80	1.00	1.30
Aerator	2.00	2.00	2.00
Circular aerator	–	1.80	2.00
Brush aerator	–	–	2.00
Screening plant	1.00	1.20	1.30
Circular and longitudinal scrapers	1.00	1.30	1.50
Collectors	1.15	1.25	1.50
Sludge collectors	1.25	1.25	1.25
Pre-concentrator	–	1.10	1.30
Sludge compressor	1.50	1.50	1.50
Archimedean screw water pumps	–	1.30	1.50
Water turbines	–	–	2.00
Settling tanks	1.00	1.00	1.25
Chemical substance loaders	1.25	1.25	1.25
Dehydration screens	1.50	1.50	1.50
Slag crushers	1.50	1.50	1.50
Slow or fast mixers	1.50	1.50	1.50
PUMPS			
Impeller pumps	1.15	1.35	1.45
Displacement pumps			
1 Piston	1.35	1.50	1.80
> 1 Piston	1.20	1.40	1.50
EXCAVATORS			
Bucket chain	–	1.60	1.60
Tippers	–	1.30	1.50
Track laying vehicles	1.20	1.60	1.80
BUCKET WHEELS			
As pick-ups	–	1.70	1.70
For original material	–	2.20	2.20
Cutting heads	–	2.20	2.20
Slewing gear [1)]	–	1.40	1.80

Operating factors - f_B			
Application	Actual time of use under load per day (hours)		
	≤ 0.5	> 0.5...10	> 10
DREDGERS			
Conveyors	1.25	1.25	1.50
Cutting head drives	2.00	2.00	2.00
Screens	1.75	1.75	2.00
Stackers	1.25	1.25	1.50
Hoisting winches	1.25	1.25	1.50
MINING			
Crusher	1.55	1.75	2.00
Vibrators and screens	1.55	1.75	2.00
Slewing gear	–	1.55	1.80
BUCKET WHEEL EXCAVATORS			
Grinding machine for sand	1.25	1.25	1.50
Hammer mills	1.75	1.75	2.00
CHEMICAL INDUSTRY			
PLASTICS			
Extruders	–	–	1.60
Extruders (plastics)	–	1.40	1.60
- with variable speed	1.50	1.50	1.50
- with fixed speed	1.75	1.75	1.75
Batch kneaders	1.75	1.75	1.75
Continuous mixers	1.50	1.50	1.50
Mixing plant	1.25	1.25	1.25
Calenders	1.50	1.50	1.50
Blower units	1.50	1.50	1.50
Coating	1.25	1.25	1.25
Films	1.25	1.25	1.25
Pre-shredder	1.50	1.50	1.50
Bars	1.25	1.25	1.25
Sheets	1.25	1.25	1.25
Tubes	1.25	1.25	1.50
RUBBER			
Extruders (rubber)	–	1.50	1.80
Rubber kneader	–	1.80	1.80
Continuous mixers	1.50	1.50	1.50
Refiners - two-cylinder	1.50	1.50	1.50

Operating factors - f_B			
Application	Actual time of use under load per day (hours)		
	≤ 0.5	> 0.5...10	> 10
Rubber rollers (2 in series)	1.55	1.75	2.00
Rubber rollers (3 in series)	–	1.50	1.75
Heating rollers	1.35	1.50	1.75
Rubber calenders	–	1.50	1.50
Calenders	–	1.65	1.65
Cooling drums	–	1.30	1.40
Mills	1.55	1.75	2.00
Sheet rollers	1.55	1.75	2.00
Refining rollers	1.55	1.75	2.00
MIXERS			
for homogeneous material	–	1.35	1.40
for inhomogeneous material	1.40	1.60	1.70
AGITATORS FOR AGITATED MATERIALS			
with uniform density	–	–	1.50
with varying density	–	–	1.65
with uneven gassing	–	–	1.80
Toasters	1.00	1.30	1.50
Centrifuges	1.00	1.20	1.30

IRON SMELTING METAL PRODUCTION AND PROCESSING			
Sheet turning device	1.00	1.00	1.20
Block press	1.00	1.20	1.20
Reelers	–	1.60	1.60
Cooling bed scrapers	–	1.50	1.50
Sheet pusher	1.50	1.50	1.50
Winders / Coiling machines	–	1.60	1.75
Cutting rollers	1.55	1.75	2.00
Wire-pulling machines	1.35	1.50	1.75
Sheet metal bending machines [1)]	–	1.00	1.00
ROLL-ALIGNING MACHINES			
Roller conveyors - continuous	–	1.50	1.50
Roller conveyors - intermittent	–	2.00	2.00
Tube reversing	–	1.80	1.80
SHEARING			
General	2.00	2.00	2.00
Continuous cutting [1)]	–	1.50	1.50
Cranked cutting [1)]	1.00	1.00	1.00
Continuous casting drivers [1)]	–	1.40	1.40

Operating factors - f_B			
Application	Actual time of use under load per day (hours)		
	≤ 0.5	> 0.5...10	> 10
ROLLERS			
Sheet metal reversing	–	2.50	2.50
Sheet slab reversing	–	2.50	2.50
Wire reversing	–	1.80	1.80
Thin sheet metal reversing	–	2.00	2.00
Thick sheet metal reversing	–	1.80	1.80
Roller adjusters	0.90	1.00	–

ENERGY			
Frequency converters	–	1.80	2.00
Water wheels	–	–	1.70
Water turbines	–	–	2.00
Electricity generators	1.00	1.00	1.25

CONVEYOR SYSTEMS			
bucket conveyors	–	1.40	1.50
Bucket conveyors with centrifugal emptying	1.15	1.15	1.25
Conveyor reels	1.40	1.60	1.60
Chain conveyors	–	1.50	1.80
LOADERS			
Plate feeder	1.25	1.25	1.50
Belt feeder	1.15	1.15	1.50
Table feeder	1.00	1.00	1.25
Swivelling loader	1.75	1.75	2.00
Helical loader	1.15	1.25	1.50
Conveyers	–	1.50	1.80
Evenly distributed load	1.15	1.15	1.25
Heavy duty	1.25	1.25	1.50
Unevenly distributed load	1.25	1.25	1.50
Belt conveyors ≤ 100 kW	1.15	1.25	1.40
Belt conveyors > 100 kW	1.15	1.30	1.50
Goods lifts [1)]	–	1.20	1.50
Vertical conveyors - other	–	1.50	1.80
Passenger lifts [1)]	–	1.50	1.80
Slat conveyors	–	1.25	1.50
Vibrators and screens	1.55	1.75	2.00
Swinging or vibrating conveyors	1.75	1.75	2.00
Escalators	1.15	1.25	1.55
Rail vehicles	–	1.50	–

Operating factors - f_B			
Application	Actual time of use under load per day (hours)		
	≤ 0.5	> 0.5...10	> 10
ELEVATORS			
Loading	1.25	1.25	1.50
Gravity emptying	1.15	1.15	1.25
HOISTING WINCHES [1]			
Heavy duty	1.75	1.75	2.00
Medium duty	1.25	1.25	1.50
Inclined lifts	1.25	1.25	1.50

WOOD INDUSTRY			
GENERAL			
Debarking machines - spindle feed	1.25	1.25	1.50
Main drive	1.75	1.75	1.75
Conveyors - Burners	1.25	1.25	1.50
Main or heavy duty	1.50	1.50	1.50
Main trunk	1.75	1.75	2.00
Sawing, carousel	1.25	1.25	1.50
CONVEYORS			
Plate	1.75	1.75	2.00
Transfer	1.25	1.25	1.50
CHAIN			
Floor	1.50	1.50	1.50
Green wood	1.50	1.50	1.75
MANUAL SAWING			
Chain	1.50	1.50	1.75
Dog coupling	1.50	1.50	1.75
Paring cylinder	1.75	1.75	2.00
FEEDS			
Trimming machine	1.25	1.25	1.50
Multiple blades	1.75	1.75	1.75
Cutter	1.25	1.25	1.50
Stacked trunks	1.75	1.75	1.75
Trunk conveyor - ramp with wheels	1.75	1.75	1.75
Trunk tipping device	1.75	1.75	1.75
Planing machine feed	1.25	1.25	1.50
Trunk tipping roller trains	1.50	1.50	1.50
With rollers	1.75	1.75	1.75
Selection table	1.25	1.25	1.50
Roller train with tilting table	1.25	1.25	1.50

Operating factors - f_B			
Application	Actual time of use under load per day (hours)		
	≤ 0.5	> 0.5...10	> 10
POSITIONING PLATFORMS			
Chain	1.50	1.50	1.75
Track	1.50	1.50	1.75
Plate drive	1.25	1.25	1.50
Drives for veneer turning machines	1.25	1.25	1.50

COMPACTORS			
Compactors	2.00	2.00	2.00

CRANES [2] / [1]			
CRANES AND LIFTING GEAR			
Slewing gear [1]	1.00	1.40	1.80
Derricking gear	1.00	1.10	1.40
Bridge trolleys for portal cranes	3.00	3.00	3.00
Bridge trolleys	1.10	1.60	2.00
Lifting gear	1.00	1.10	1.40
Luffing gear	1.00	1.20	1.60
REPAIR DOCKS			
Main pulley system	2.50	2.50	2.50
Auxiliary pulley system	2.50	2.50	3.00
Arm pulley systems	2.50	2.50	3.00
Yaw drive	2.50	2.50	3.00
Travelling drive	3.00	3.00	3.00
INDUSTRIAL USE			
Main pulley system	2.50	2.50	3.00
Auxiliary pulley system	2.50	2.50	3.00
Bridge cranes	3.00	3.00	3.00
Traveling drive for crane car	3.00	3.00	3.00

MILLS AND DRUMS			
Cooling and drying drums	–	1.50	1.60
Rotary kilns	–	–	2.00
Ball mills	–	–	2.00
Coal mills	–	1.50	1.75
ROTARY MILLS			
Ball and rod mills	2.00	2.00	2.00
Cylindrical ring gear	2.00	2.00	2.00
Helical ring gear	1.50	1.50	1.50
Direct coupling	2.00	2.00	2.00
Cement kilns	1.50	1.50	1.50
Dryers and coolers	1.50	1.50	1.50

Operating factors - f_B			
Application	**Actual time of use under load per day (hours)**		
	≤ 0.5	**> 0.5...10**	**> 10**
FOODSTUFFS INDUSTRY			
Cane sugar production			
Sugar cane knives [1]	–	–	1.70
Sugar cane mills	–	–	1.70
Diced mash	–	–	1.20
Extraction system, cooling machine, boiler	–	–	1.40
Beet washing, cutting machine	–	–	1.50
Beet peeling machine	2.00	2.00	2.00
Oil mills	1.50	1.50	1.50
Mills (low speed)	1.75	1.75	1.75
Kneading machines	1.25	1.25	1.50
Mincing machines	1.25	1.25	1.50
Slicing machines	1.25	1.25	1.50
Crushers and mills	–	–	1.75
Drying drums	–	1.25	1.50
PAPER MACHINES / PAPER AND CELLULOSE INDUSTRY			
all types [3]	–	1.80	2.00
PULPER DRIVES			
Debarking drums and machines	1.55	1.80	–
Rollers (pick-up, screen suction and screen feed rollers)	–	1.80	2.00
Drying cylinders (roller bearings)	–	1.80	2.00
Calenders (roller bearings)	–	1.80	2.00
Filters (Pressure and suction filters)	–	1.80	2.00
Chopping machines and shredders	1.55	1.75	2.00
Jordan mills	–	1.50	1.75
Presses (bark, felt, gluing and suction presses)	–	–	1.75
Rolling devices	–	–	1.75
HYDRAPULPERS			
Washing filters	–	–	1.50
Yankee cylinders (dryers)	1.25	1.25	1.25
Agitators (kneaders)	1.50	1.50	1.50
Agitators for pure liquor	1.25	1.25	1.25
Paring cylinder	2.00	2.00	2.00
Debarking machines (mechanical)	2.00	2.00	2.00
Refiners	1.50	1.50	1.50
Paper shredders	1.25	1.25	1.25
Calenders	1.25	1.25	1.25
Shredders	2.00	2.00	2.00
chip loaders	1.50	1.50	1.50
Patination cylinders	1.25	1.25	1.25

Operating factors - f_B			
Application	**Actual time of use under load per day (hours)**		
	≤ 0.5	**> 0.5...10**	**> 10**
CONVEYORS			
Chips, bark, chemicals	1.25	1.25	1.25
Trunk (incl. table)	2.00	2.00	2.00
Sleeve presses	1.25	1.25	1.25
Millers	2.00	2.00	2.00
Cylindrical tools	1.25	1.25	1.25
DRYERS			
Paper machine	1.25	1.25	1.25
with conveyors	1.25	1.25	1.25
Embossing machines	1.25	1.25	1.25
Extrusion presses	1.50	1.50	1.50
Pulp refiners	1.50	1.50	1.50
Kiln drives	1.50	1.50	1.50
Paper rollers	1.25	1.25	1.25
Plates	1.50	1.50	1.50
Presses - mat and suction	1.25	1.25	1.25
Kneading machines	2.00	2.00	2.00
Vacuum pumps	1.50	1.50	1.50
Flat reelers	1.25	1.25	1.25
SCREENS			
Chips	1.50	1.50	1.50
Rotating screens	1.50	1.50	1.50
Vibrating screens	2.00	2.00	2.00
Glue presses	1.25	1.25	1.25
Super calender	1.25	1.25	1.25
Concentrator (AC motor)	1.50	1.50	1.50
Concentrator (DC motor)	1.25	1.25	1.25
Washing machine (AC motor)	1.50	1.50	1.50
Washing machine (DC motor)	1.25	1.25	1.25
Coiling and uncoiling holders	1.25	1.25	1.50
Surface rinsing machines	1.25	1.25	1.25
PUMPS			
Pumps	–	1.40	1.50
Centrifugal pumps / Impeller pumps	1.15	1.35	1.45
Piston pumps (1 cylinder)	1.35	1.50	1.80
Piston pumps (multiple cylinders)	1.20	1.40	1.50
Archimedean pumps	–	1.25	1.50
Rotary pumps (gear pumps, vane pumps, positive displacement rotary pumps)	–	–	1.25

[1] Select according to the maximum torque
[2] Precise categorisation of the load can be carried out e.g. according to FEM1001.
[3] Thermal investigation is generally necessary

Operating factors - f_B			
Application	Actual time of use under load per day (hours)		
	≤ 0.5	> 0.5...10	> 10
AGITATORS AND MIXERS			
Agitators for liquids	–	–	1.80
Agitators for solid media (inhomogeneous materials)	–	–	1.80
Agitators for solid media (homogeneous materials)	–	–	1.80
CABLE RAILWAYS			
Materials cableways	–	1.40	1.50
Pendulum cableways	–	1.60	1.80
Ski tows	–	1.30	1.40
Circulating cableways	–	1.40	1.60
SCREENS			
Air washers	1.00	1.00	1.25
Rotary screen - stone or gravel	1.25	1.25	1.50
Mobile screens with water input	1.00	1.00	1.25
TEXTILE MACHINERY			
General	1.25	1.25	1.50
VENTILATORS AND FANS			
Centrifugal fans	1.00	1.00	1.25
Pressure ventilated fans	1.25	1.25	1.25
Push-pull counterflow fans	1.50	1.50	1.50
Industrial and mining fans	1.50	1.50	1.50
Blowers (axial and radial)	1.50	1.50	1.50
Centrifugal blowers	1.00	1.00	1.25
Rotary blowers	1.25	1.25	1.50
Rotary vane blowers	1.25	1.25	1.50
Heat exchangers	1.50	1.50	1.50
Cooling tower fans	–	–	2.00
Dry cooling towers	–	–	2.00
Wet cooling tower	2.00	2.00	2.00

Operating factors - f_B			
Application	Actual time of use under load per day (hours)		
	≤ 0.5	> 0.5...10	> 10
COMPRESSORS			
Piston compressors	–	1.80	1.90
Rotary compressors	–	1.40	1.50
Radial compressors	–	1.40	1.50
Screw compressors	–	1.50	1.75
Centrifugal compressors	1.25	1.25	1.50
Rotary vane compressors	1.25	1.25	1.50
Multi-cylinder reciprocating piston compressors	1.50	1.50	1.75
Single cylinder reciprocating piston compressors	1.75	1.75	2.00
CEMENT INDUSTRY AND CLAY PROCESSING			
Concrete mixers	1.50	1.50	1.75
Crushers [1]	1.55	1.75	2.00
Rotary kilns	–	–	2.00
Tube mills	–	–	2.00
Separators	–	1.60	1.60
Rolling mills	–	–	2.00
Brick presses	1.75	1.75	2.00
Tile presses	1.75	1.75	2.00
Kneading machines	1.25	1.25	1.50

[1] Select according to the maximum torque
[2] Precise categorisation of the load can be carried out e.g. according to FEM1001.
[3] Thermal investigation is generally necessary

Efficiency for calculations η_N

The stated efficiency is only to be used for calculation purposes and does not correspond to the actual efficiency of the gear unit. The factors refer to a normal oil level and the installation positions M1 or M3. A higher oil level causes reduced efficiency.

η_N	Nominal efficiency for design			
	SK ..207	SK..307	SK..407	SK..507
	0.975	0.960	0.955	0.935

Input factors f_M

Additional torque fluctuations due to the type of input machinery are taken into account with the input factor.

f_M	Type of drive machine		
	Electric motors Hydro motors Turbines	Piston machines 4-6 cylinder, Degree of inequality 1: 100 to 1 : 200	Piston machines 1 - 3 cylinder, Degree of inequality 1: 100
	1.00	1.25	1.50

Start-up factors f_{AN}

The start-up factor must be taken into account if the torque resulting to the drive due to start-up is not known. If the ratio of the start-up torque to the input torque is known, this may be used in the calculation.

f_{AN}	Type of drive running					
	Direct drive	Soft start	Frequency inverter	Star/ Delta	Fluid coupling	Fluid coupling with delay chamber
	3.0	1.8	1.5 ... 2.0 [1)]	1.3	2.0	1.6

[1)] Depending on the start-up ramp which is set

Peak load factor with reversing factor f_S

The peak load factor takes into account the frequency and direction of peak loads.

f_S	Direction of load	Load peaks per hour					
		1 - 5	6 - 20	21 - 40	41 - 80	81 - 160	> 160
	constant	0.50	0.63	0.70	0.79	0.88	1.05
	reversing	0.70	0.87	0.97	1.09	1.22	1.46

Speed factor f_n

By means of the speed factor, the speed can be approximately taken into account.
For speeds n_{1N}= 1000 / 1500 / 1200 / 1800 min^{-1} power tables
have been produced, which provide more accurate figures.

f_n	Input speed in min^{-1}								
	500	750	800	900	1000	1200	1400	1500	1800
	0.33	0.50	0.53	0.60	0.67	0.80	0.93	1.00	1.20

Switch-on time factor f_{ED}

With lower switch-on times, the heat generated by the gearbox decreases.

f_{ED}	Switch-on time				
	100 %	80 %	60 %	40 %	20 %
	1.00	1.08	1.19	1.37	1.75

Ambient temperature factors f_t

Takes into account the possibility of heat dissipation at various cooling air temperatures.

f_t	Gearbox cooling	Ambient temperature								
		10°C	15°C	20°C	25°C	30°C	35°C	40°C	45°C	50°C
	Without additional cooling / with fan cooling	1.14	1.07	1.00	0.93	0.86	0.79	0.71	0.64	0.57
	Integrated water cooler[1)]	1.06	1.03	1.00	0.97	0.95	0.91	0.88	0.84	0.81

[1)] also with additional fan cooling

Cooling air temperature factor f_L

Takes into account the possibility of heat dissipation at various cooling air temperatures.

f_L	Air temperature at fan inlet					
	15°C	20°C	25°C	30°C	35°C	40°C
	1.09	1.00	0.91	0.82	0.73	0.64

Utilisation factor f_A

The utilisation factor considers the load-independent power losses of the gear unit.

f_A	Selection acc. to effective power for P_N (P_1/P_N)						
	20 %	30 %	40 %	50 %	60 %	70 %	80 - 100 %
	Selection acc. to operating factor f_B						
	5.0	3.3	2.5	2.0	1.65	1.4	≤ 1.25
	0.58	0.74	0.83	0.89	0.94	0.97	1.00

Cooling water temperature factors f_w

Cooling water with a temperature above 20°C reduces the cooling capacity of the cooling system. For intermediate temperatures, the factor for the higher temperature must be selected.

f_w	Water inlet temperature			
	15°C	20° C	25° C	30° C
	1.17	1.00	0.83	0.67

Installation altitude factors f_H

The installation altitude factor takes into account the lower heat dissipation of the gearbox at higher altitudes.

f_H	Installation altitude above sea level				
	0 m	1000 m	2000 m	3000 m	4000 m
	1.00	0.96	0.91	0.87	0.83

Air movement factors f_V

The airspeed over the gearbox influences the dissipation of heat by convection.

f_v	Air movement over gearbox		
	small room, little air movement	large hall with free air movement	continuous strong air movement
	0.5 m/s	1.2 m/s	4.0 m/s
	0.72	1.00	1.28

Oil supply factors $f_Ö$

Higher oil levels decrease the efficiency and cause higher gearbox temperatures. This can be taken into account with the following factors. For installation positions other than M1 or M3, please consult NORD.

$f_Ö$	Installation orientation		Type of lubrication		
			Oil bath lubrication	Pressure lubrication	Full oil level
	horizontal	M1 / M3	1.0	1.2	0.6
	vertical	M5	0.6 [2)]	0.9	0.5
	vertical	M6	0.6 [2)]	0.9	0.5
	standing	M2	0.4	1.0	0.3
	standing	M4	0.5 [1)]	0.9	0.4

1) helical gear units only
2) upper bearings grease-lubricated

NOMENCLATURE

Sizes

	Helical gear units		Bevel helical gear unit	
M_{2max}	2-stage	3-stage	3-stage	4-stage
25 kNm	SK 7207	SK 7307	SK 7407	SK 7507
31 kNm	SK 8207	SK 8307	SK 8407	SK 8507
42 kNm	SK 9207	SK 9307	SK 9407	SK 9507
51 kNm	SK 10207	SK 10307	SK 10407	SK 10507
74 kNm	SK 11207	SK 11307	SK 11407	SK 11507
101 kNm	SK 12207	SK 12307	SK 12407	SK 12507
141 kNm	SK 13207	SK 13307	SK 13407	SK 13507
242 kNm	SK 15207	SK 15307	SK 15407	SK 15507

Combinations with parallel and bevel gear units (see catalogue G1000)

	Helical gear units			
Pre-stage	**Parallel shaft gear unit**		**Bevel gear unit**	
M_{2max}	i_N	5-stage	i_N	6-stage
25 kNm	355 - 1600	SK 7307 / 4282	450 - 1600	SK 7307 / 9032.1
31 kNm	400 - 1600	SK 8307 / 4282	500 - 1600	SK 8307 / 9032.1
42 kNm	400 - 1600	SK 9307 / 5282	450 - 1600	SK 9307 / 9042.1
51 kNm	450 - 1600	SK 10307 / 5282	500 - 1600	SK 10307 / 9042.1
74 kNm	180 - 1600	SK 11307 / 6282	200 - 1600	SK 11307 / 9052.1
	125 - 160	SK 11307 / 7282		
101 kNm	180 - 1600	SK 12307 / 7282	200 - 1600	SK 12307 / 9072.1
	125 - 160	SK 12307 / 8282		
141 kNm	200 - 1600	SK 13307 / 7282	315 - 1600	SK 13307 / 9072.1
	125 - 180	SK 13307 / 9282	180 - 280	SK 13307 / 9082.1
242 kNm	250 - 1600	SK 15307 / 8282	280 - 1600	SK 15307 / 9082.1
	180 - 200	SK 15307 / 9282	180 - 250	SK 15307 / 9086.1
	125 - 160	SK 15307 / 10282		

Specimen order:

SK 11207 ASF H - IEC - CC - 200 L/4 - BRE

- BRE: Brake designation (see catalogue M7000)
- 200 L/4: Motor designation (see catalogue M7000)
- CC: Additional options (CC, FAN,...)
- IEC: Gearbox versions (IEC, MSW, MSF...)
- H: Options on drive unit (G, D, H, B...)
- ASF: drive output versions (A, AF, ASH, V, L...)
- 07: Type abbreviation (07)
- 2: Stage code (2, 3, 4, 5)
- 11: Size (7, 8, 9, 10, 11, 12, 13, 15)
- SK: NORD abbreviation (SK)

2: **Helical gear**unit	2-stage
3: **Helical gear**unit	3-stage
4: **Bevel gear**unit	3-stage
5: **Bevel gear**unit	4-stage

Specimen order double gear units:

SK 11307 / 6282 ASF H - IEC - CC - 200 L/4 - BRE

- 6282: First stage gear unit 6282 (see catalogue G1000)

Available Options and Designs

Overview of versions available

Abbre-viations	Description	Output design	Options for output	Input design	Additional options	Size							
						SK 7..07	SK 8..07	SK 9..07	SK 10..07	SK 11..07	SK 12..07	SK 13..07	SK 15..07
A	Hollow shaft	X				✔	✔	✔	✔	✔	✔	✔	✔
AS	Hollow shaft with shrink disc	X				✔	✔	✔	✔	✔	✔	✔	✔
W	Fixing elements for hollow shaft		X			✔	✔	✔	✔	✔	✔	✔	✔
CC	Cooling coil				X	✔	✔	✔	✔	✔	✔	✔	✔
CS1A (...H)	Cooling system oil/water (Size A to H)				X	✔	✔	✔	✔	✔	✔	✔	✔
CS2A (...H)	Cooling system oil/air (Size A to H)				X	✔	✔	✔	✔	✔	✔	✔	✔
EA	Splined hollow shaft, DIN 5480	X				✔	✔	✔	✔	✔	✔	✔	✔
ED	Elastic torque support		X			✔	✔	✔	✔	✔	✔	✔	✔
EV	Splined solid shaft, DIN 5480	X				✔	✔	✔	✔	✔	✔	✔	✔
F	Block flange		X			✔	✔	✔	✔	✔	✔	✔	✔
FAN	Fan				X	✔	✔	✔	✔	✔	✔	✔	✔
FK	Collar flange		X			✔	✔	✔	✔	✔	✔	✔	✔
F1	Drive flange			X		✔	✔	✔	✔	✔	✔	✔	✔
D	Torque support		X			✔	✔	✔	✔	✔	✔	✔	✔
H	Cover as a touch guard		X	X		✔	✔	✔	✔	✔	✔	✔	✔
H66	IP66 cover as protection against dust and splashed water		X	X		✔	✔	✔	✔	✔	✔	✔	✔
IEC	Adapter for fitting B5 IEC standard and trans-standard motors			X		✔	✔	✔	✔	✔	✔	✔	✔
L	Solid shaft on both sides	X				✔	✔	✔	✔	✔	✔	✔	✔
LC	Lubricant circulation				X	1)	1)	1)	1)	1)	1)	1)	1)
MC	Motor bracket				X	1)	1)	1)	1)	1)	1)	1)	1)

Available versions

Abbre-viations	Description	Output design	Options for output	Input design	Additional options	Size							
						SK 7..07	SK 8..07	SK 9..07	SK 10..07	SK 11..07	SK 12..07	SK 13..07	SK 15..07
MF..	Motor frame (Options: see MS..)				X	✔	✔	✔	✔	✔	✔	✔	✔
MO	Additional monitoring elements				X	1)	1)	1)	1)	1)	1)	1)	1)
MSK	Motor swing base with elastic coupling				X	✔	✔	✔	✔	✔	✔	✔	✔
MSKB	Motor swing base with brake				X	✔	✔	✔	✔	✔	✔	✔	✔
MST	Motor swing base with fluid coupling				X	✔	✔	✔	✔	✔	✔	✔	✔
MSTB	Motor swing base with turbo-coupling and brake				X	✔	✔	✔	✔	✔	✔	✔	✔
MT	Motor mount				X	1)	1)	1)	1)	1)	1)	1)	1)
NEMA	Mounting adapter for NEMA motors				X	1)	1)	1)	1)	1)	1)	1)	1)
OA	Oil expansion vessel				X	✔	✔	✔	✔	✔	✔	✔	✔
OH	Oil heater				X	✔	✔	✔	✔	✔	✔	✔	✔
OT	Oil storage tank				X	✔	✔	✔	✔	✔	✔	✔	✔
R	Back stop			X		✔	✔	✔	✔	✔	✔	✔	✔
V	Solid shaft	X				✔	✔	✔	✔	✔	✔	✔	✔
VL	Reinforced bearings	X				✔	✔	✔	✔	1)	1)	1)	1)
VL2	Agitator version	X				✔	✔	✔	✔	✔	✔	✔	✔
VL3	Agitator version with “Drywell”	X				✔	✔	✔	✔	✔	✔	✔	✔
VL4	Agitator version with “True Drywell”	X				1)	1)	1)	1)	✔	✔	✔	✔
W	one input drive journal			X		✔	✔	✔	✔	✔	✔	✔	✔
W2	Two drive shaft journals			X		✔	✔	✔	✔	✔	✔	✔	✔
W3	Three drive shaft journals			X		✔	✔	✔	✔	✔	✔	✔	✔
WX	Auxiliary drive unit with freewheeling coupling and speed monitoring			X		✔	✔	✔	✔	✔	✔	✔	✔

1) on request

Available versions


Examples

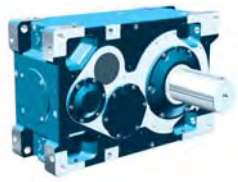

SK 13,207 V - W
Two-stage helical gear unit
with solid output shaft

SK 13307 A - W
Three-stage helical gear unit
with hollow output shaft

SK 13407 V - W
Three-stage beveled helical gear unit
with solid output shaft

SK 13507 V - W2
Four-stage bevel helical gear unit
with solid output shaft
with additional free input shaft

SK 13207 VF - W
Two-stage helical gear unit
with solid shaft and block flange on output

SK 13207 VF - W
Two-stage helical gear unit
with solid shaft and block flange on output
Installation position M2


SK 13207 A - ED - W
Two-stage helical gear unit
with hollow output shaft
and elastic torque support

SK 13207 A - D - W
Two-stage helical gear unit
with hollow output shaft
and standard torque support

SK 13207 V - W - OT
Two-stage helical gear unit
with solid output shaft
and oil level vessel

SK 13207 V - W - OA
Two-stage helical gear unit
with solid output shaft
and oil expansion vessel

SK 13207 VFVL3 - IEC - 200L/4
Two-stage helical gear unit
with attached IEC motor, solid output shaft
and "agitator flange" with reinforced bearings

SK 13207 AFVL3SH - IEC - 200L/4
Two-stage helical gear unit
with attached IEC motor
Hollow output shaft with shrink disc
and "agitator flange" with "Drywell"


SK 13207 VFK - W
Two-stage helical gear unit
with solid shaft and collar flange on output

SK 13207 V - IEC - 200L/4
Two-stage helical gear unit with attached IEC motor
with solid output shaft
Installation position M1

SK 13207 V - IEC - 200L/4
Two-stage helical gear unit with attached IEC motor
with solid output shaft
Installation position M2

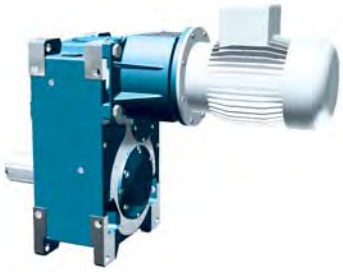

SK 13207 V - IEC - 200L/4
Two-stage helical gear unit with attached IEC motor
with solid output shaft
Installation position M4

SK 13207 V - IEC - 200L/4
Two-stage helical gear unit with attached IEC motor
with solid output shaft
Installation positions M5 and M6

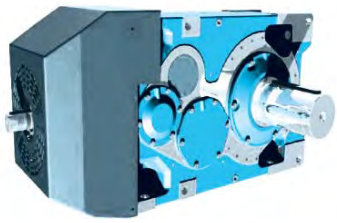

SK 13407 V - W - FAN
Three-stage beveled helical gear unit
with solid output shaft
with attached fan and protective cover

MODULAR CONSTRUCTION KIT SYSTEM

Overview of variants (selection of some options)

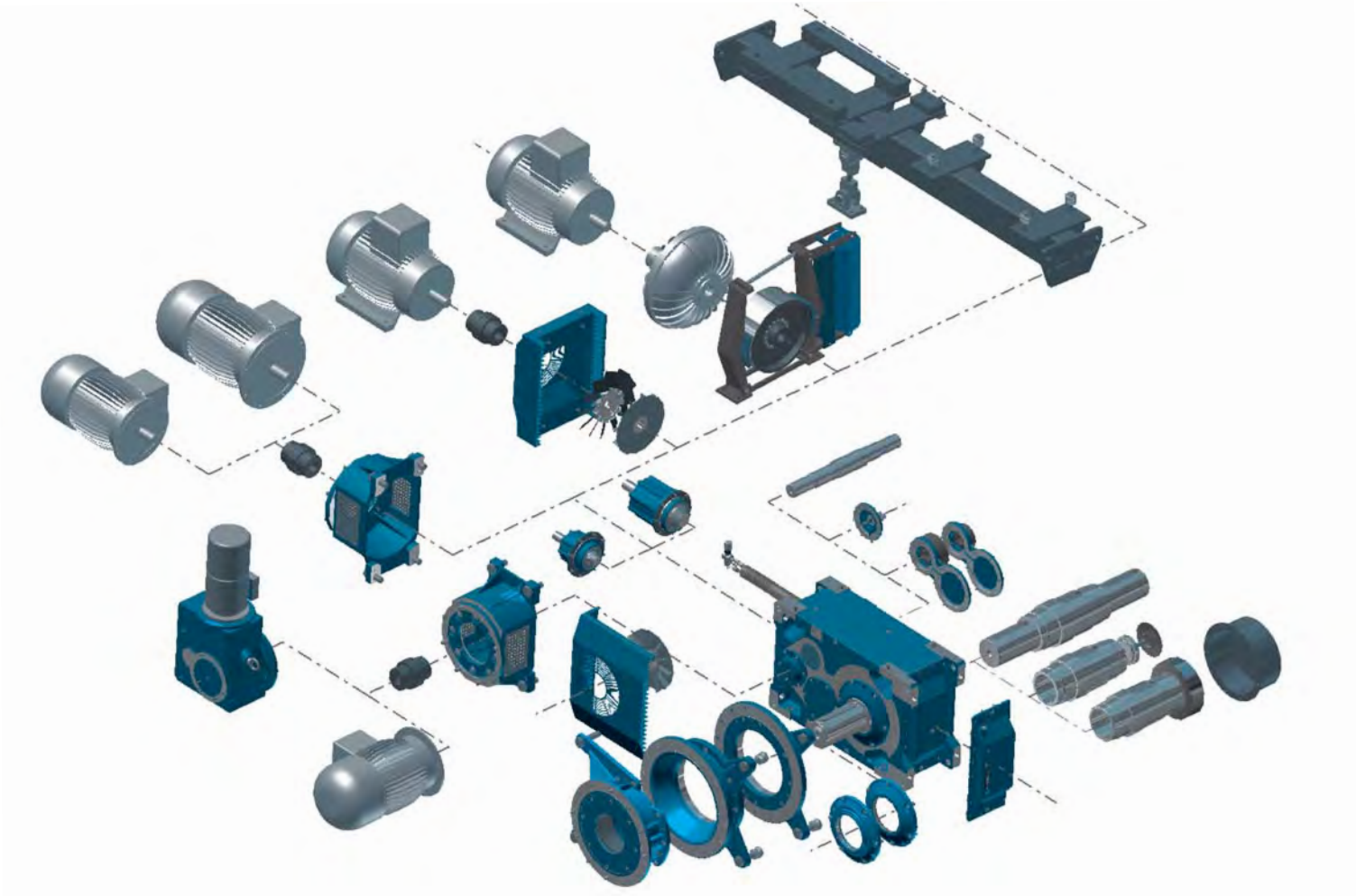

Shrink discs (S, SH)

For gearbox versions with hollow shafts the use of shrink discs is especially advisable for better and easier assembly. The length of the customer's journal which can be inserted into the hollow shaft of the gearbox can be obtained from ⇨📖188.

The diameter of the shaft journal must comply with ISO g6. The material of the customer's journal must have a yield strength of at least R_e = 360 N/mm² so that the pressing to create the frictional coupling can be built up and no permanent deformation occurs.

M_{2max} max. permissible drive torque

s Security of the shrink disc for g6, M_{2max} and a plug-in shaft roughness Rz ≤ 15 µm

After tightening the tensioning bolts the face of the inner ring on the screw side must be flush with the face of the outer ring.

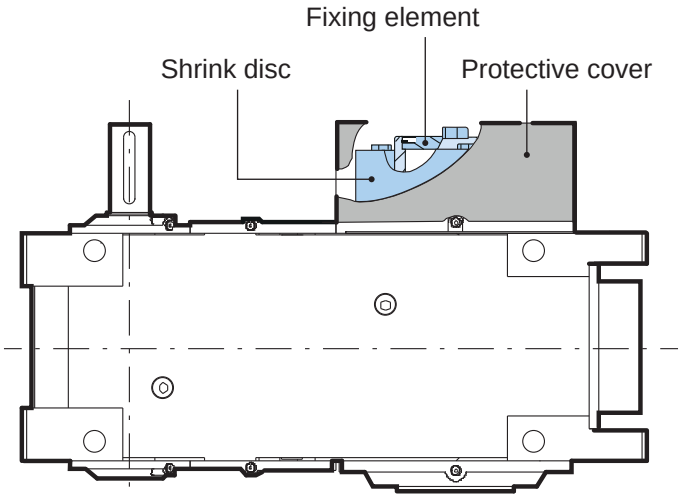

Gear units				Shrink disc			Hexagon head bolt DIN 933 - 12.9
Helical gear unit type		Bevel gear unit type		Type	M_{2max} [Nm]	s g6	Type
SK 7207	ASH	SK 7407	ASH	160	25300	2.1	M16
SK 7307	ASH	SK 7507	ASH		25300	2.1	
SK 8207	ASH	SK 8407	ASH	160	30500	1.9	M16
SK 8307	ASH	SK 8507	ASH		31000	1.9	
SK 9207	ASH	SK 9407	ASH	190	41900	2.5	M16
SK 9307	ASH	SK 9507	ASH		41600	2.5	
SK 10207	ASH	SK 10407	ASH	190	48500	2.1	M16
SK 10307	ASH	SK 10507	ASH		51300	2.0	
SK 11207	ASH	SK 11407	ASH	220	74900	2.4	M20
SK 11307	ASH	SK 11507	ASH		69600	2.6	
SK 12207	ASH	SK 12407	ASH	240	98200	2.4	M20
SK 12307	ASH	SK 12507	ASH		101400	2.4	
SK 13207	ASH	SK 13407	ASH	280	137400	3.0	M24
SK 13307	ASH	SK 13507	ASH		141800	2.9	
SK 15207	ASH	SK 15407	ASH	300	234900	2.2	M24
SK 15307	ASH	SK 15507	ASH		242500	2.1	

Provisional technical data

Shrink discs and motor sizes
Possible combinations

	IEC Motors								Trans-standard Motors			
Size	**132**	**160**	**180**	**200**	**225**	**250**	**280**	**315**	**315**	**355**	**400**	**450**
Flange ø [1)]	**300**	**350**	**350**	**400**	**450**	**550**	**550**	**660**	**800**	**900**	**1000**	**1150**
SK 7..07	✓	✓	✓	✓	✓	✓	✓	✓	#	#	#	#
SK 8..07	✓	✓	✓	✓	✓	✓	✓	✓	#	#	#	#
SK 9..07	✓	✓	✓	✓	✓	✓	✓	✓	#	#	#	#
SK 10..07	✓	✓	✓	✓	✓	✓	✓	✓	#	#	#	#
SK 11..07	✓	✓	✓	✓	✓	✓	✓	✓	✓	#	#	#
SK 12..07	✓	✓	✓	✓	✓	✓	✓	✓	✓	✓	#	#
SK 13..07	✓	✓	✓	✓	✓	✓	✓	✓	✓	✓	✓	#
SK 15..07	✓	✓	✓	✓	✓	✓	✓	✓	✓	✓	✓	✓

[1)] a1 according to DIN / P according to IEC
on request

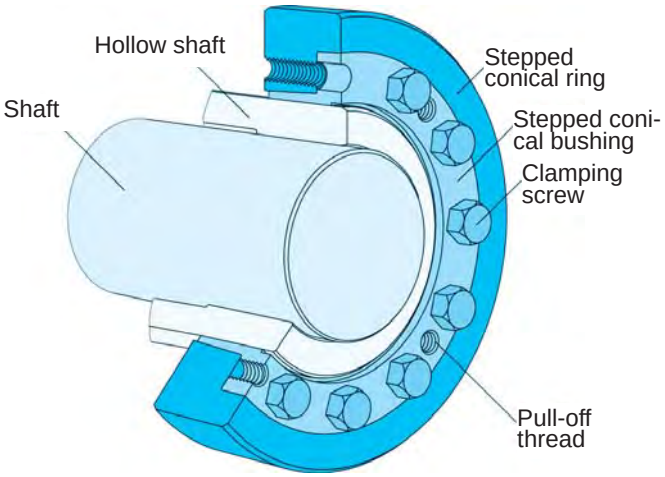

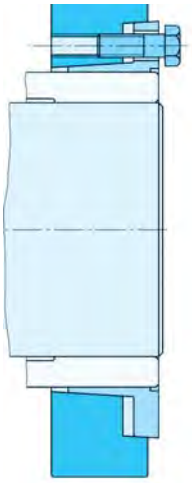

Shrink disc **unclamped**

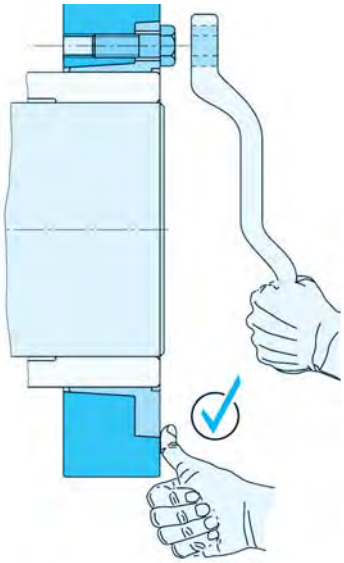

Shrink disc **clamped**

Image source: RINGSPANN GmbH

Fastening elements (B)

Fastening elements for shaft-mounted gearboxes are available as an option.

The fixing elements can be used for assembling, dismantling and axial fixing of the customer's shaft. The customer's shaft can be with or without a collar.

The threaded rod, assembly/dismantling nuts and dismantling screws are not included in the scope of delivery.

Prerequisites for use:

- The solid shaft to be used must have a centre hole according to DIN 332/2 and also to factory standard (⇨📖61).
- Space must be available to fit the fixing element. The permissible shaft dimensions can be obtained from the table of dimensions (⇨📖 188).

For a detailed description, please refer to the operating and assembly instructions

Installation (fixing)

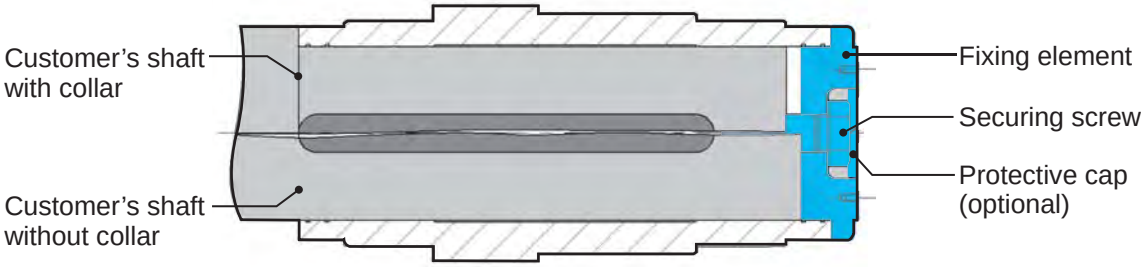

Assembly:

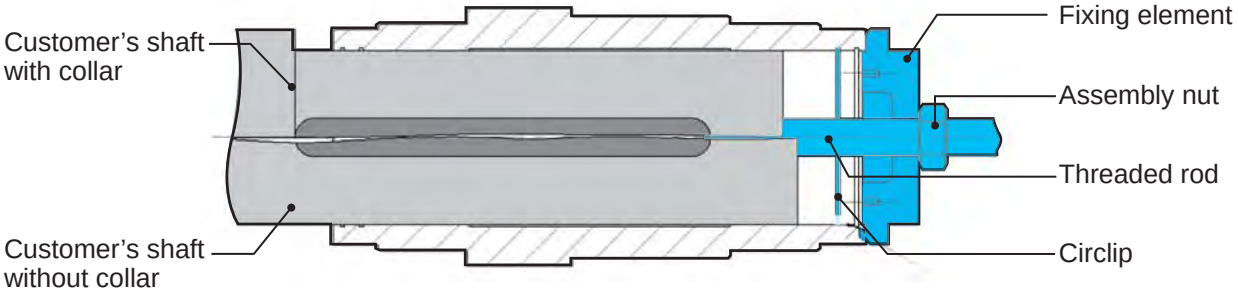

Dismantling:

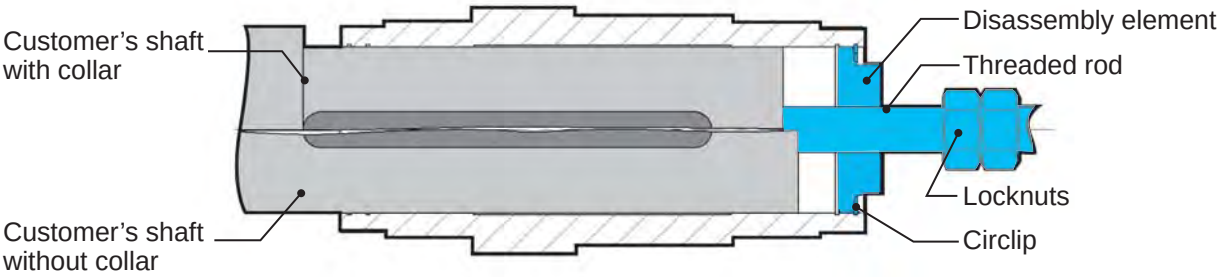

Torque supports (D, ED)

For shaft mounted versions of hollow shaft gearboxes, optional torque supports are available. In addition to a simple torque support (Type D), NORD offers a torque support with integral elastic bushing (Type ED), which has better damping characteristics (vibration damping).

Assembly should be carried out from the side of the machine, in order to reduce the bending moment on the machine shaft. Tension and pressure and installation upwards or downwards are not permissible. The torque support may only be installed on the input side, as otherwise the permissible loading would be exceeded.

Stressing of the torque support during installation or operation must be avoided, as otherwise the life-span of the drive shaft bearings could be reduced. Torque supports are not suitable for the transmission of radial forces, therefore they may only be used in associations with motor IEC housings or couplings which cannot transmit radial forces.

The output torque has to be limited to values of the table below. If greater torques are required, please consult us.

Gear units	M_{2max} [Nm]	
	Type D	Type ED
SK 7..07	25,000	23,500
SK 8..07	31,000	25,000
SK 9..07	40,000	42,000
SK 10..07	41,000	46,500
SK 11..07	66,000	66,000
SK 12..07	101,000	74,000
SK 13..07	131,000	141,000
SK 15..07	242,000	239,000

Type D: standard torque support

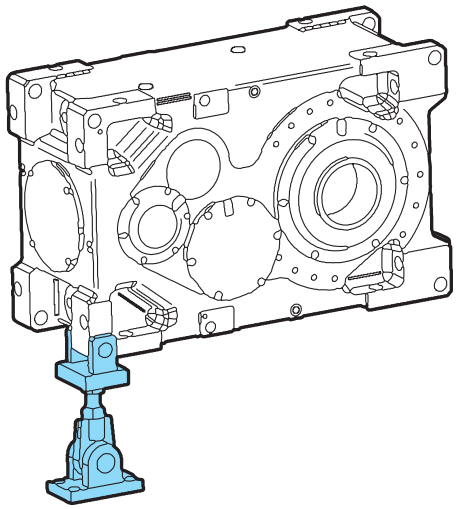

Type ED: elastic torque support

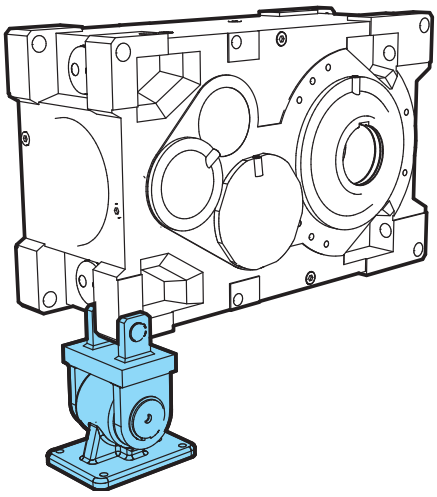

Type ED: Elastic torque support for gear unit rocker

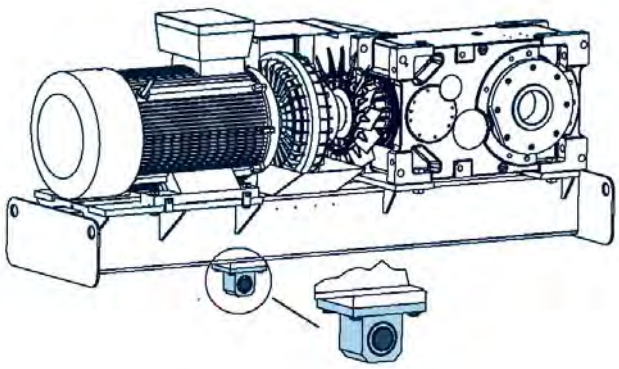

Backstops (R)

Optional backstops, which allow rotation in only one direction and block the other direction of rotation are available for attachment to the gearbox. The lubrication of the backstop is by means of the gear oil. Three-phase motors larger than size 80 can be equipped with a grease-lubricated backstop. The backstops lift off due to centrifugal force above a lifting speed n_1 (see table) and are then free of friction.

If the lift off speed is not reached, or for speeds in excess of n_1 = 1800 min^{-1}, consultation with NORD is necessary.

For drive units with a backstop, the direction of rotation of the output shaft must be stated. The direction of rotation is stated with a view onto the drive shaft.

CW = Clockwise direction of rotation, right-hand rotation

CCW = Counterclockwise direction of rotation, left-hand rotation

The direction of rotation of the shafts is indicated with indicator plates on the gearbox housing.

For angular drives, the position of the output shafts and the side on which the backstop is installed determine the direction of view for the statement of direction of rotation. The direction of view for the statement of direction of rotation is always towards the output shaft journal.

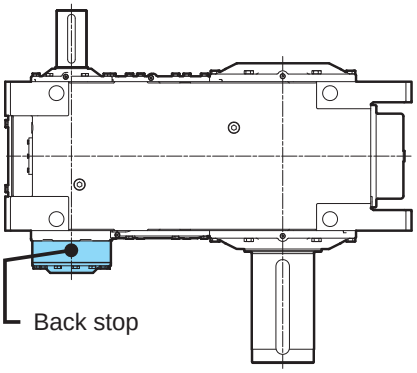

For hollow shaft gearboxes with shrink discs, the output shaft journal is on the side opposite to the shrink disc. For hollow shafts with parallel keys or splined hubs, and for solid shafts on both sides, the side on which the return stop is mounted is the direction of view towards the gearbox.

Attention! Danger of fracture. Before starting up the system, check the direction of rotation of the motor and gear unit. Arrows on the gearbox indicate the direction of rotation.

Design: The backstops are designed for double the nominal gearbox torque (M_{2max}), with reference to the output. If greater safety is required, please consult us.

Gear units	Stages	i_N	Lift off speed n_1 [min^{-1}]
SK 7207	2	7.1 - 25	400
SK 7307	3	28 - 315	430
SK 7407	3	18 - 100	1636
SK 7507	4	112 - 400	1759
SK 8207	2	8 - 28	400
SK 8307	3	31.5 - 355	430
SK 8407	3	20 - 112	1636
SK 8507	4	125 - 450	1759
SK 9207	2	7.1 - 25	320
SK 9307	3	28 - 355	400
SK 9407	3	18 - 100	1309
SK 9507	4	112 - 400	1636
SK 10207	2	8 - 28	320
SK 10307	3	31.5 - 400	400
SK 10407	3	20 - 112	1309
SK 10507	4	125 - 450	1636
SK 11207	2	5.6 - 20	320
SK 11307	3	31.5 - 112	400
		22.4 - 28	320
SK 11407	3	11.2 - 80	1140
SK 11507	4	112 - 400	1420
		80 - 100	1140
SK 12207	2	5.6 - 20	250
SK 12307	3	22.4 - 112	320
SK 12407	3	12.6 - 71	890
SK 12507	4	80 - 400	1140
SK 13207	2	5.6 - 20	250
SK 13307	3	22.4 - 112	320
SK 13407	3	12.6 - 71	890
SK 13507	4	80 - 400	1140
SK 15207	2	5.6 - 20	220
SK 15307	3	22.4 - 112	250
SK 15407	3	12.6 - 71	785
SK 15507	4	80 - 400	890

Provisional technical data

Direction of rotation of input/output shafts

The direction of rotation of the gearbox shafts refers to the installation position [1] M1 and a shaft configuration[1] with a direction of view towards the mounting surface[1] F2.

Marking of the direction of free rotation
if return stops are used

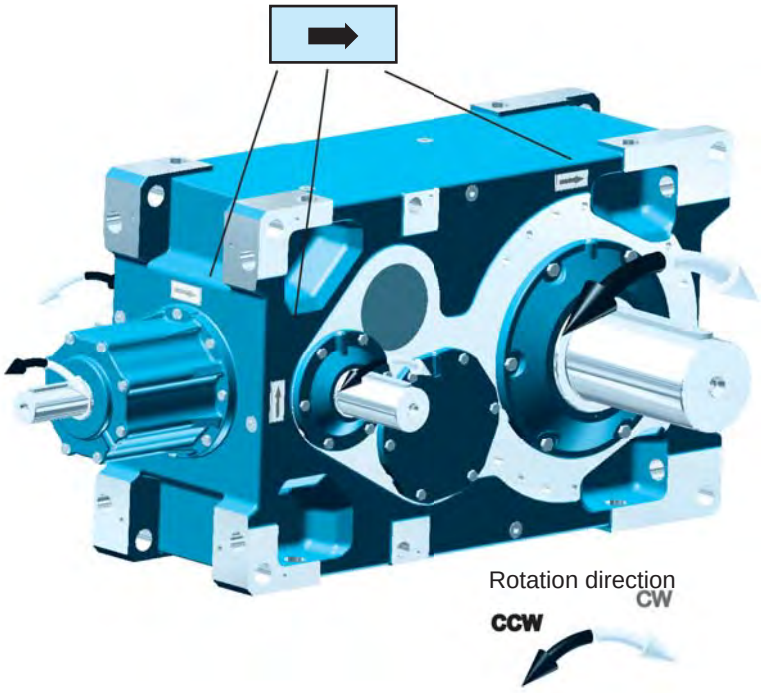

Shaft positions, top view

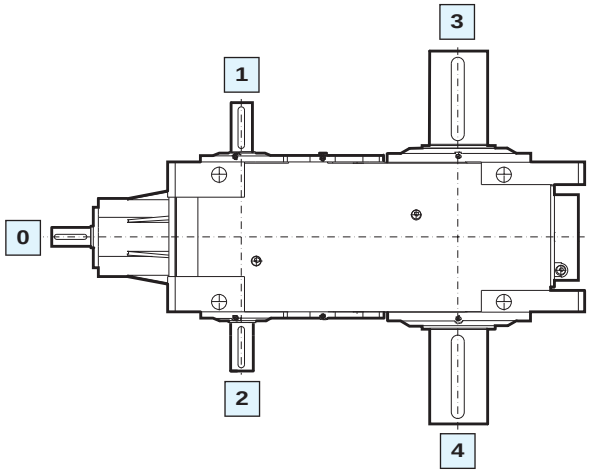

[1] ⇨ 📖 67-70

Installation position[1] M1 Direction of view[1] F2	Direction of rotation of input			Direction of rotation of output	
Shaft lengths[1] =>	**0**	**1**	**2**	**3**	**4**
SK ..207	---	CW	CCW	CW	CCW
	---	CCW	CW	CCW	CW
SK ..307	---	CW	CCW	CCW	CW
	---	CCW	CW	CW	CCW
SK ..407 (Standard)	CW	CW	CCW /R	CW	CCW
	CCW	CCW	CW /R	CCW	CW
SK ..407 (Optional)	CW	CCW /R	CW	CCW	CW
	CCW	CW /R	CCW	CW	CCW
SK ..507 (Standard)	CW	CW	CCW /R	CCW	CW
	CCW	CCW	CW /R	CW	CCW
SK ..507 (Optional)	CW	CCW /R	CW	CW	CCW
	CCW	CW /R	CCW	CCW	CW

/R : Standard position backstop

Illustration of gear stages for industrial gear units

(WN 0 - 000 - 14)

The direction of rotation can be changed by mounting the crown wheel on the opposite side for the types SK 7407 - SK 15407 and SK 7507 - SK 15507.

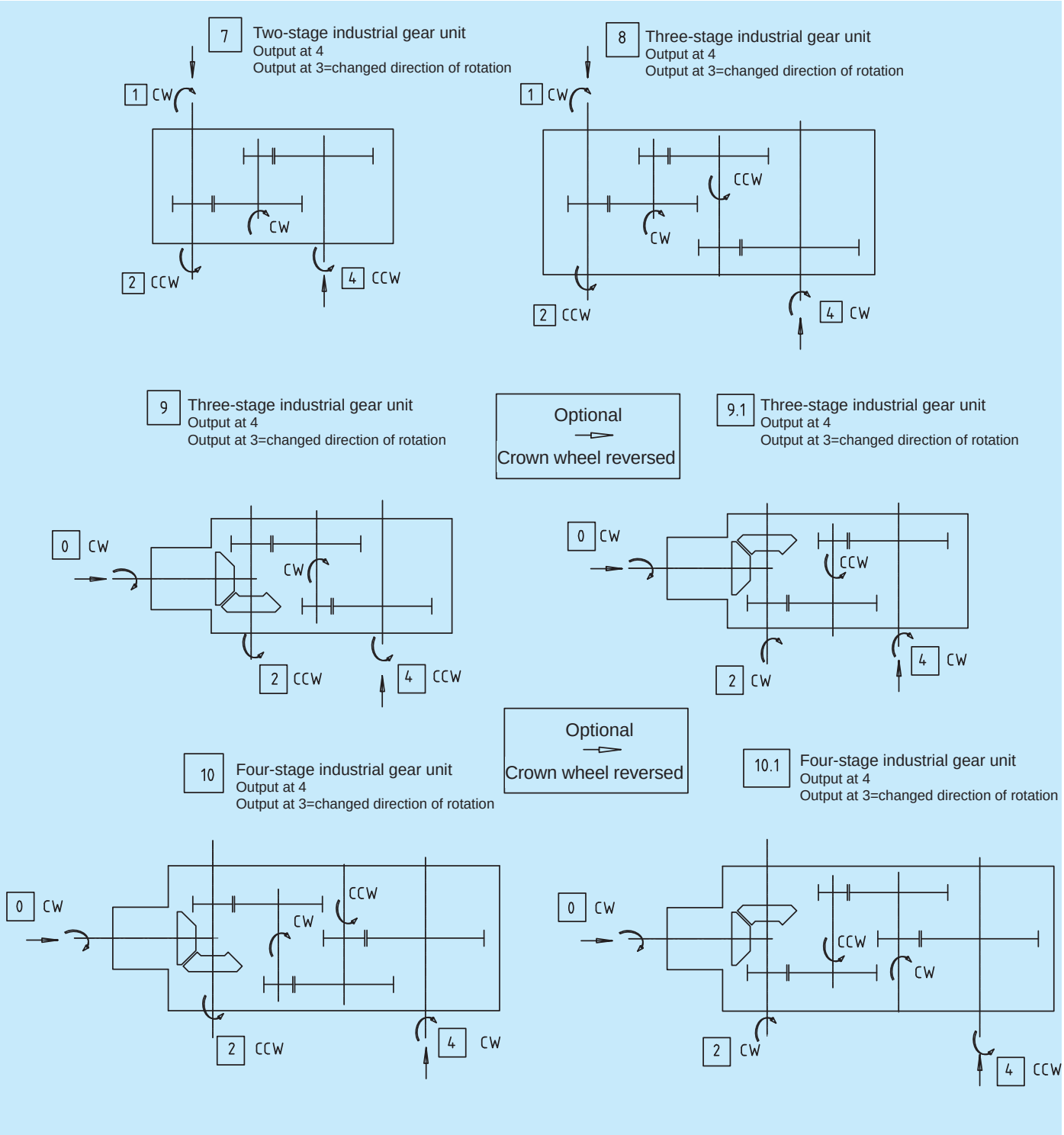

View towards the outside face of the shaft

Direction of rotation for the direction of viewing

Sealing systems

The gearbox is supplied with one shaft seal on the drive shaft and two shaft seals on the output shaft. The seal material is NBR or FKM (Viton). For operating temperatures (oil temperatures) above 85°C, FKM should be used. The shaft sealing rings can be supplied with or without a dust protection collar.

In addition to the standard sealing systems, the following special seals are available:

- Two shaft sealing rings
- Labyrinth seal
- Taconite seals
- Gamma-ring seal (not shown)

The choice of the optimum sealing system depends on the operating and ambient conditions, as well as the requirements of the gear unit for the particular application. We will be glad to advise you. Please contact us if sealing systems other than those listed here are required.

When seals lubricated with grease are heated, oil may separate from the grease (false leakage).
This is a natural process and does not constitute a reason for complaint.

Gear type	Position	Seal system				
		Taconite E	Taconite F	Labyrinth	2 shaft sealing rings	Gamma ring
SK 7..07 SK 8..07 SK 9..07 SK 10..07	Drive	1)	1)	1)	1)	1)
	Output	1)	1)	1)	√	1)
SK 11..07 SK 12..07 SK 13..07 SK 15..07	Drive	√	√	√	√	1)
	Output	√	√	√	√	1)

1) on request

Schematic diagrams:

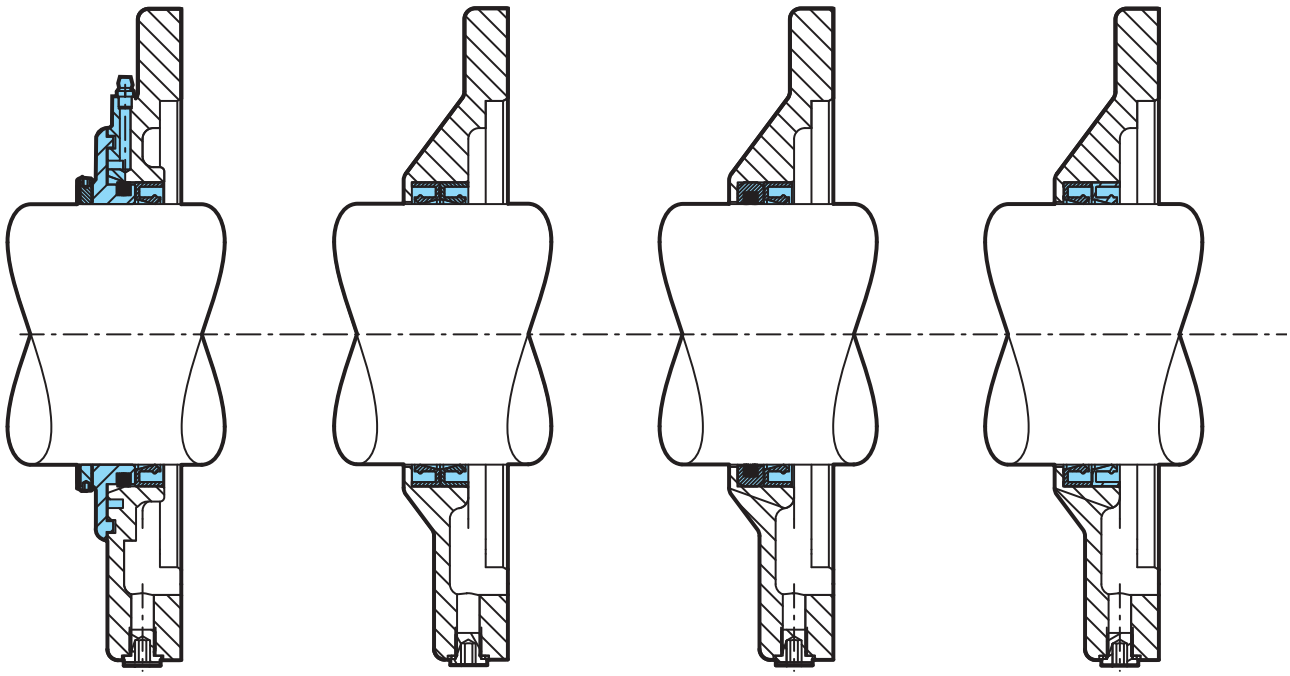

Taconite F

(grease-lubricated labyrinth seal; can be re-lubricated)

Taconite E

(grease-filled outer shaft sealing ring)

Labyrinth seal

Standard

(drive with one, output with two shaft sealing rings)

Types of lubrication

Three typical principle lubrication systems are available. The differentiation though is clear.

1) Oil bath lubrication:
The gearbox is filled with oil so that that intermeshing and bearing components which do not dip into the oil are lubricated by splashed oil. This is the usual form of lubrication for horizontal installation positions (M1 or M3), and standard for NORD industrial gearboxes.

It is problematic for very low (no splashed oil) and very high (high splashing losses, heating) speeds.

2) Immersion lubrication
All intermeshing and bearing surfaces are totally or partially immersed in an oil bath. The gearbox is (almost) totally filled with oil.

Used for standing (installation position M2 or M4) or vertical (installation position M5 or M6) in order to ensure adequate lubrication. In some cases an additional oil expansion vessel (⇨📖 48) is necessary. However, pressure circulation lubrication is technically better.

Usually leads to poorer efficiency and therefore higher gearbox temperatures. High speeds with installation position M2 are particularly critical.

3) Pressure circulation lubrication
Via a pump (motor or flange-mounted pump), oil is taken out of the gearbox and pumped to the bearing and intermeshing surfaces by means of lubrication pipes. The oil level of the gearbox can be reduced.

As an option, various elements such as coolers, filters, sensors etc. can be integrated into the oil circuit in order to perform additional functions. For installation positions M2, M4, M5 and M6, pressure circulation lubrication is an alternative to immersion lubrication. High input speeds and Drywell requirements can be catered for.

It is advisable to use pressure circulation lubrication instead of a high oil level. The additional costs for the necessary lubrication equipment usually pay back very quickly, as on the one hand the necessary size of gearbox may be larger due to the reduced efficiency, as well as the very low thermal power limit. On the other hand, the operating costs increase due to the higher energy consumption and the larger amounts of lubricant needed.

Do not mix synthetic and mineral lubricants! This also applies to disposal.

High oil levels should be avoided if possible!!

Lubricant

The lubricants to be used can be categorised into the following groups:

CLP	Mineral oil
CLP PG	Synthetic oil (polyglycol)
CLP HC	Synthetic oil (Polyalphaolefines)
E	Biodegradable oil
CLP PG H1	Food grade oil H1 (as per regulation FDA 178.3570, synthetic oil, polyglycol)

The lubricant is an element of the design. An optimal lubricant will be determined by NORD on the basis of the operating and ambient conditions as well as the version of the drive unit.

NORD will determine the type and viscosity of the lubricant for each specific order. This will be entered in the order confirmation and on the type plate.

For NORD gear units, only oils acc. to the lubricant table (⇨📖 46) or CLP quality oils are permitted.

As per DIN 51517-3, the oils must contain ingredients to increase corrosion protection and/or aging resistance as well as for the reduction of wear in mixed frictional areas and/or for the increase of load bearing capacity.

The damage force level according to the FZG test as per DIN 51354-2 must be ≥ 12.

According to the FE-8 roller bearing test as per DIN 51819-3, the roller wear must not exceed 30 mg and the cage wear must not exceed 100 mg.

Compatibility of the elastomer materials of the shaft sealing rings used in NORD gear units with the seals between the mounting surfaces as well as with the gear unit coating must be ensured.

With the exception of the first stage of double gear units and auxiliary gear units, gear units and geared motors are not filled with lubricant on delivery.

Relative density of oil
To determine the overall weight, a relative density of 1.0 kg/l can be assumed.

With mineral oil filling, the lubricant should be replaced every 10,000 operating hours or after two years. These periods are doubled for synthetic products. For extreme operating conditions, e.g. high humidity, aggressive environment and large temperature fluctuations, shorter lubricant intervals are advisable. It is advisable to combine the change of lubricant with a thorough cleaning of the gearbox.

For ambient temperatures below -30°C and above 60°C shaft sealing rings with special material qualities must be used.

DIN / ISO AGMA ISO VG	bp	Castrol	FUCHS	KLÜBER LUBRICATION	Mobil	
CLP 220 L-CKC 220 AGMA 5EP	Energol GR-XP 220	Alpha SP 220 Alpha MAX 220 Optigear BM 220 Tribol 1100 / 220	Renolin CLP 220 Renolin CLP 220 Plus Gearmaster CLP 220	Klüberoil GEM 1 - 220 N	Mobilgear 600 XP 220 Mobilgear XMP 220	Shell Omala F 220
CLP 320 L-CKC 320 AGMA 6EP	Energol GR-XP 320	Alpha SP 320 Alpha MAX 320 Optigear BM 320 Tribol 1100 / 320	Renolin CLP 320 Renolin CLP 320 Plus Gearmaster CLP 320	Klüberoil GEM 1 - 320 N	Mobilgear 600 XP 320 Mobilgear XMP 320	Shell Omala F 320
CLP 680 L-CKC 680 AGMA 8EP	Energol GR-XP 680	Alpha SP 680 Optigear BM 680 Tribol 1100 / 680	Renolin CLP 680 Renolin CLP 680 Plus Gearmaster CLP 680	Klüberoil GEM 1 - 680 N	Mobilgear 600 XP 680 Mobilgear XMP 680	-
CLP PG 220 L-CKT 220 AGMA 5EP	Enersyn EP-XP 220	Tribol 1300 / 220	Renolin PG 220 Gearmaster PGP 220	Klübersynth GH 6 - 220	-	Shell Tivela S 220 Shell Cassida WG 220
CLP PG 320 L-CKT 320 AGMA 6EP	Enersyn EP-XP 320	Tribol 1300 / 320	Renolin PG 320 Gearmaster PGP 320	Klübersynth GH 6 - 320	-	Shell Tivela S 320 Shell Cassida WG 320
CLP PG 680 L-CKT 680 AGMA 8EP	Enersyn EP-XP 680	Tribol 1300 / 680	Renolin PG 680 Gearmaster PGP 680	Klübersynth GH 6 - 680	-	Shell Tivela S 680 Shell Cassida WG 680
CLP HC 220 L-CKT 220 AGMA 5EP	Enersyn EP-XF 220	Optigear Synth X 220 Tribol 1710 / 220	Renolin Unisyn CLP 220 Gearmaster SYN 220	Klübersynth GEM 4 - 220N	Mobil SHC 630	Shell Omala HD 220
CLP HC 320 L-CKT 320 AGMA 6EP	Enersyn EP-XF 320	Optigear Synth X 320 Tribol 1710 / 320	Renolin Unisyn CLP 320 Gearmaster SYN 320	Klübersynth GEM 4 - 320N	Mobil SHC 632	Shell Omala HD 320
CLP HC 680 L-CKT 680 AGMA 8EP	-	Optigear Synth X 680	Renolin Unisyn CLP 680 Gearmaster SYN 680	Klübersynth GEM 4 - 680N	-	Shell Omala HD 680
E 220 L-CKT 220 AGMA 5EP	-	Tribol BioTop 1418 / 220	Plantogear 220 S Gearmaster ECO 220	Klübersynth GEM 2 - 220	-	Shell Naturelle Gear Fluid EP 220
E 320 L-CKT 320 AGMA 6EP	-	Tribol BioTop 1418 / 320	Plantogear 320 S Gearmaster ECO 320	Klübersynth GEM 2 - 320	-	Shell Naturelle Gear Fluid EP 320
E 680 L-CKT 680 AGMA 8EP	-	-	Plantogear 680 S Gearmaster ECO 680	-	-	-
CLP PG H1 220 L-CKT 220 AGMA 5EP	-	Optileb GT 220	-	Klübersynth UH1 6 - 220	-	Shell Cassida WG 220
CLP PG H1 320 L-CKT 320 AGMA 6EP	-	Optileb GT 320	-	Klübersynth UH1 6 - 320	-	Shell Cassida WG 320
CLP PG H1 680 L-CKT 680 AGMA 8EP	-	Optileb GT 680	-	Klübersynth UH1 6 - 680	-	Shell Cassida WG 680

Note:

This table shows comparable lubricants from various manufacturers. The manufacturer can be changed within a particular viscosity or lubricant type. We must be contacted in case of change of viscosity or lubricant type, as otherwise no warranty for the functionality of our gearboxes can be accepted.

Oil screw positions

The gear units are supplied with an oil level and oil drain screw and a vent. The other holes are closed. If requested, alternative positions can be agreed according to the table.

Note:
Before commissioning and long periods of storage the seal of the vent screw should be removed in order to prevent excess pressure, and therefore leakage from the gear unit.

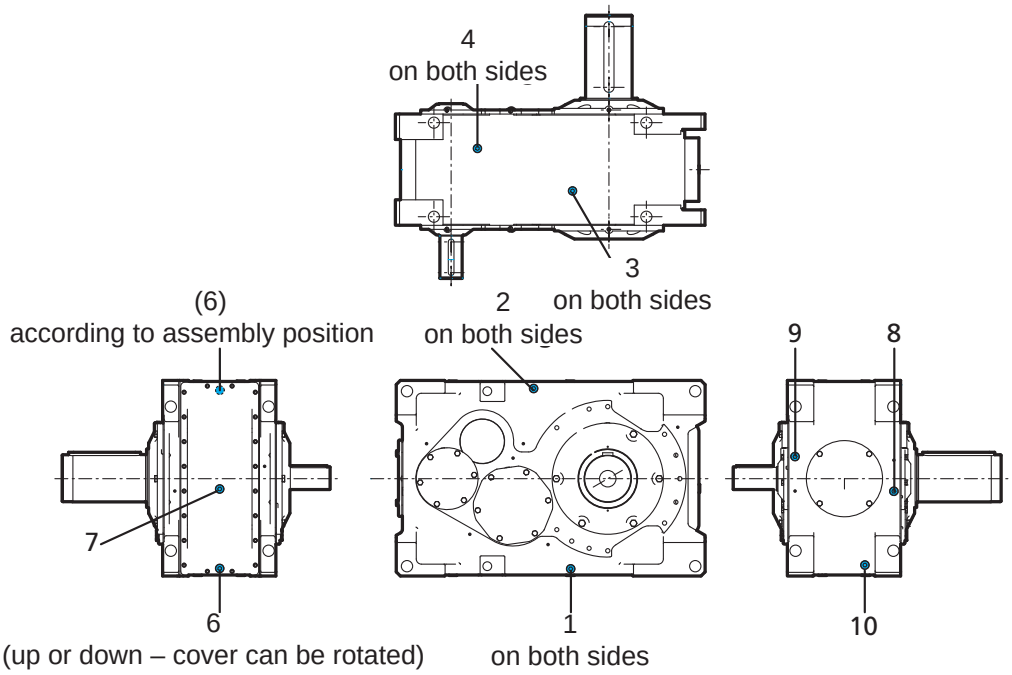

No.	Thread	Installation position[3]					
		M1	M2	M3	M4	M5	M6
1	G1“	**A**	S[1]	E	S[1]	A / E	A / E
2	G1“	E	S[1]	**A**	S[1]	A / **E**	A / **E**
3	G1“	**E**	**S**	**E**	S[1]	**S**	S[1]
4	G1“	E	---	E	**S**	S[1]	**S**
6	G1“	A / E[2]		A / E[2]	A	S[1]	S[1]
7	G1“	S[1]	**E**	S[1]	**A**	S[1]	S[1]
8	G1“	**S**	**A**	**S**	**E**	**A**	E
9	G1“	S[1]	A	S[1]	E	E	**A**
10	G1“	A	E	E	A	S[1]	S[1]

Standard: Bold labeling

A: Oil drain

E : Vent

S : Oil level

[1] Special oil level

[2] According to cover assembly

[3] Installation positions M1 to M6 ⇨ 68

Oil expansion tank (OA)

Gearboxes with a motor or input shaft which is pointing vertically upwards, can be designed with a high oil level for the lubrication of the first stage of the gearing. With the vertical installation positions M5 and M6 (⇨📖 68), in case of oil foaming, the use of an optional oil expansion vessel prevents any escape of oil through the vent screw.

For helical gear units with gear ratios i_{tot}<20 , NORD therefore strongly recommends the use of an oil expansion chamber or pressure circulation lubrication for the vertical installation positions M5 and M6. Otherwise, no warranty is accepted.

Note:
Cannot be combined with pressure vent.

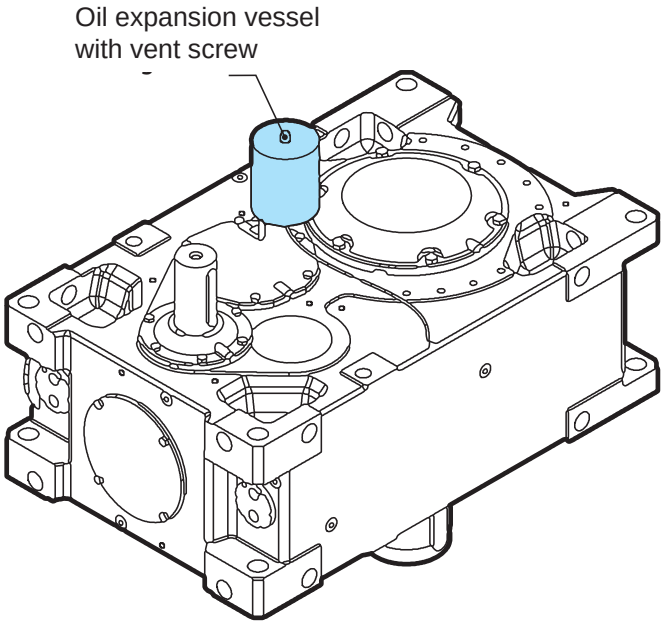

Oil storage tank (OT)

Gearboxes which are to be completely filled with oil must be equipped with an oil level tank.

Oil level tanks are located above the gearbox and increase the oil level so that the oil level in the oil level tank is always above the gearbox. As all rotating components are completely below the surface of the oil, oil foaming is prevented. In addition, even with vertical designs, all bearings are lubricated in an oil bath.

Oil storage tanks are larger than oil expansion chambers and due to the additional vent pipes have two oil pipes which connect the oil storage tank to the gearbox. The oil level must be checked in the oil level tank (dipstick).

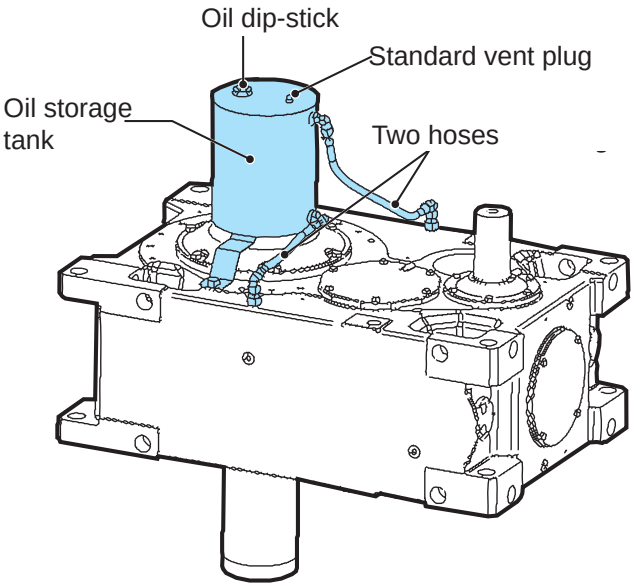

Gearbox cooling using a fan

By the use of fans, the thermal power limit of the gearbox can be increased, without the need for additional connections to the gearbox. Usually, a fan can be retrofitted, however this must be checked for each individual case (installation space, type of gearbox). The fan covers provide protection against contact and guide the flow of cooling air over the housing.

Installation conditions for fans

An adequate supply of air to the fan must be ensured, the vent grill in the fan cover must be kept clear.

Fans cannot be combined with all additional options. Please contact us in case of options IEC, NEMA, VL,F, FK, F1, and WX.

High-power fan

As a rule, high-power fans yielding a better cooling performance are used. For an optimum cooling performance, the preferred direction of rotation and speed must be indicated.

Electric Fan [1)]

NORD provides an electric fan as a further option. This is switched on as required via a temperature switch. The fan can be attached to both end faces of the gear unit, whereby the through passage of a shaft is not possible.

[1)] further information on request

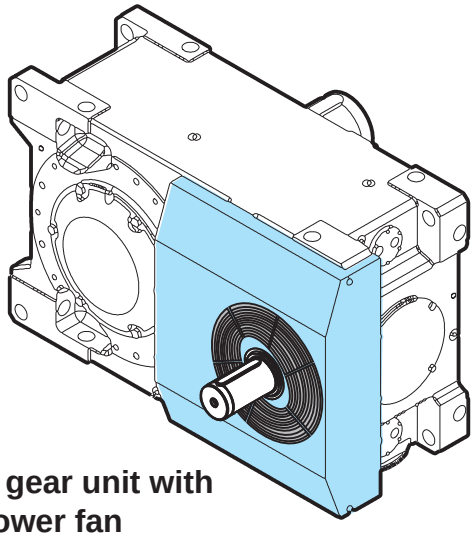

Helical gear unit with high-power fan

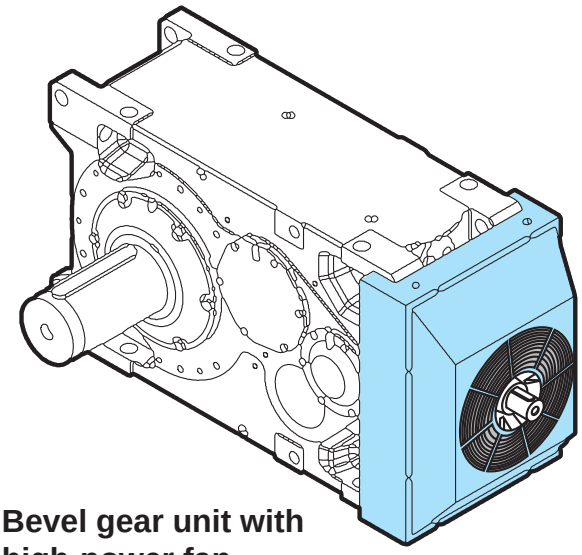

Bevel gear unit with high-power fan

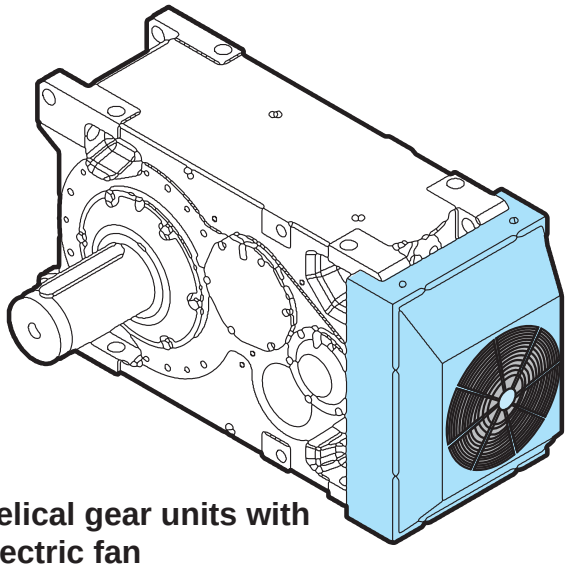

Helical gear units with electric fan

Internal water cooler (CC)

This is a cooling coil inside the gearbox, in the oil sump, which the end user connects to a suitable water supply. For the installation positions M2, M4, M5, M6 and with complete oil filling, two cooling coils may be installed on request. The thermal power limit(P_{WG}) can be increased according the the adjacent table.

As an option, mechanical and electrical solutions for the regulation of the quantity of cooling water are available, so that the water consumption is adapted to the actual required cooling power.

Integrated water cooling can be used for oil bath and immersion lubrication, however, not with pressure circulation lubrication.

Sea water-resistant integrated cooling is available on request. Consultation with us is necessary in case of other aggressive cooling media.

The cooling element must be completely submerged in the oil bath.

Operating conditions:

Water inlet temperature:	20 °C
Oil temperature:	90 °C
Ambient temperature:	20 °C
Flow rate:	max. 12 l/min.
Pressure drop of cooling water	approx. 0.5 to 1 bar

For other operating conditions, corrections to the specification of the thermal power limit must be taken into account.
(see section SELECTION OF GEAR UNIT)

Optional: Temperature-controlled quantity regulator to control the amount of cooling water.

Note:
For low temperatures the internal water cooler can be used as an oil heater by filling it with warm water before starting up the gearbox.

Optional: Use of two cooling coils.

Additional thermal power limit (P_{WG}) with two cooling coils:

Gear units	+ $P_{t.cc}$ [kW]	Gear units	+ $P_{t.cc}$ [kW]
SK 7..07	on request	SK 8..07	on request
SK 9..07	on request	SK 10..07	on request
SK 11207	202	SK 11407	112
SK 11307	126	SK 11507	78
SK 12207	280	SK 12407	156
SK 12307	175	SK 12507	108
SK 13207	359	SK 13407	199
SK 13307	225	SK 13507	138
SK 15207	359	SK 15407	199
SK 15307	225	SK 15507	138

Connection of internal water cooler

Temperature-controlled cooling water quantity regulation with temperature sensor (optional)

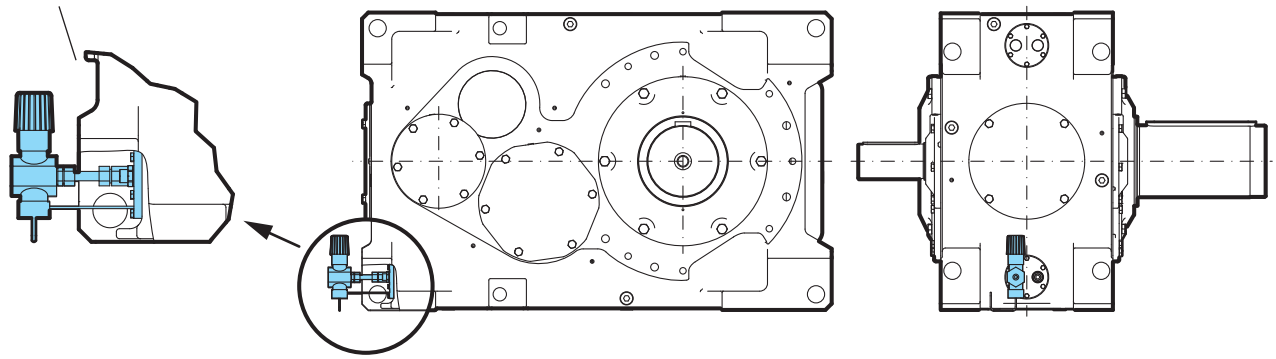

External oil / water cooler (CS1) (cooling unit)

For good price/performance ratio and optimum availability, standardised cooling/lubricating systems have been designed. These consist of the basic elements pump / filter / heat exchanger, and can be equipped with various measuring devices.

The cooling systems can be combined with all gearboxes and can be mounted on all mounting surfaces (F1 - F6), with which the filter can be rotated into a suitable position. Alternatively, the cooling system can be installed separately

External oil / water cooler (CS2) (cooling unit)

If cooling water is not available and fan cooling is not sufficient or not desired, as an option, an oil/air cooler can be used. The design of the necessary cooling power is carried out as for the water cooling system.

Scope of supply:
The piping to the cooling system and between the gearbox and the system in the case of separately installed cooling systems, is not part of the scope of supply.

Specification of the necessary cooling power:

a) Dimensioned as the sole method of cooling
From the input power P_1 and the calculated efficiency η_N (SELECTION OF GEARBOX / ⇨📖 8-27) the required cooling power results as follows:

$$P_{CS\ req} = P_1 \cdot (1 - \eta_N)$$

If the effective input power is not known, the motor power can be used.

b) in case of insufficient cooling power (convection, fan, built-in cooler)

The additionally required cooling power can be calculated from the difference between the input power and the thermal power limit. Therefore, the thermal power limit (P_{WG}) must be determined (see SELECTION OF GEAR UNIT)

$$P_{CS\ req} = (P_1 - P_{WG}) \cdot (1 - \eta_N)$$

For standard ambient conditions, suitable cooling systems which function as the sole cooling are suitable in the power tables.

Standard parameter
- Water inlet temperature: 20 °C
- Maximum oil temperature: 90 °C
- Ambient temperature: 20 °C

Optional cooling system accessories:
- Thermometer
- Pressure switch
- Manometer
- Optical status monitoring
- Electrical status monitoring
- Filters
- Filter with bypass
- Particle counter

Please consult us for other requirements or requests.

Power data for external oil / water cooler (cooling unit)

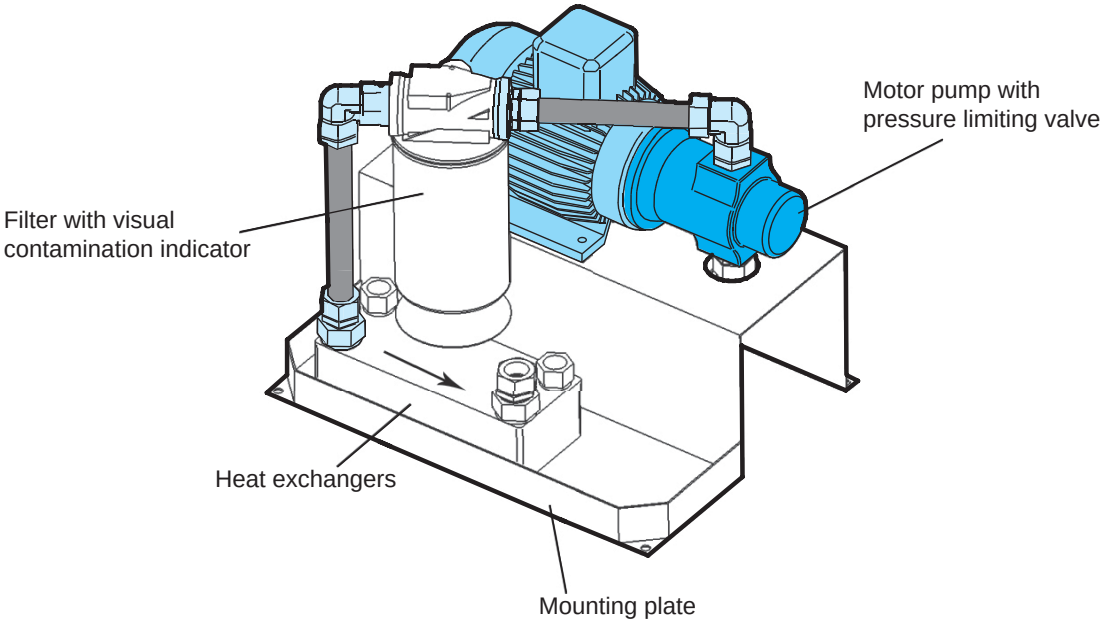

CS1 size	Cooling power	Thermal power limit with cooling system P_{CS}				V_W	V_{oil}	$t_{W.in}$	Pump drive power
		SK..207	SK..307	SK..407	SK..507				
[-]	[kW]	[kW]	[kW]	[kW]	[kW]	[l/min]	[l/min]	[°C]	[kW]
A	3	120	75	67	46	5	10	20	0.55
W	7	280	175	156	108	10	20	20	1.5
C	10.5	420	263	233	162	10	20	20	1.5
D	13	520	325	289	200	10	40	20	1.5
E	16.5	660	413	367	254	20	40	20	1.5
F	23	920	575	511	354	20	40	20	1.5
G	31.5	1260	787	700	485	40	80	20	3.0
H	50	2000	1250	1111	769	40	80	20	3.0

Additional options on request

Specifications for external oil / air cooler (cooling unit)

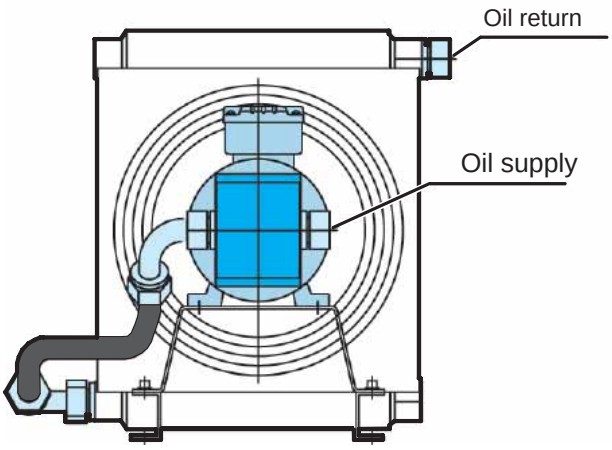

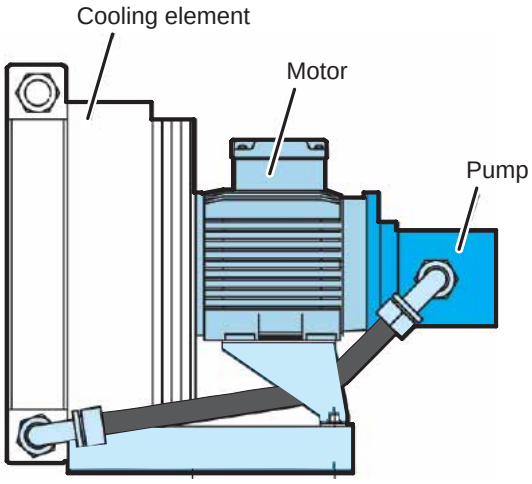

CS2 size	Cooling power	Thermal power limit with cooling system P_{CS}				V_{oil}	Pump drive power	Nominal current I_N (230 / 400 V)	Weight
		SK..207	SK..307	SK..407	SK..507				
[-]	[kW]	[kW]	[kW]	[kW]	[kW]	[l/min]	[kW]	[A]	[kg]
A	3	120	75	67	46	10	2x 0.25	1.65 / 0.95 2.1 / 1.2	31
W	7	280	175	156	108	20	0.75	3.5 / 2.0	39
C	10.5	420	263	233	162	20	0.75	3.5 / 2.0	39
D	13	520	325	289	200	40	1.5	6.1 / 3.5	39
E	16.5	660	413	367	254	40	1.5	6.1 / 3.5	39
F	23	920	575	511	354	40	1.5	6.1 / 3.5	39
G	31.5	1260	787	700	485	80	3.0	11.3 / 6.6	39
H	50	2000	1250	1111	769	80	3.0	11.3 / 6.6	39

Atex versions available. Please contact us.

Oil heater (OH)

In case the ambient temperature (Types of lubricant ⇨📖40) is lower than permissible, the gear oil must be heated prior to a cold start, in order to ensure an adequate supply of lubricant. For this, an oil heating cartridge can be installed in the gearbox.

The oil heater has a temperature sensor and a thermostat, which is pre-set. Further variations are available on request.

If pressure circulation lubrication is used, the operational viscosity of the gear oil on start-up must not exceed 1800 cSt. For ISO-VG220 this corresponds to a temperature of at least 10°C for mineral oil, and a temperature of at least 0°C for synthetic oil. Below this range an oil heater must be used.

The oil heater must be fully immersed in the oil bath in order to prevent damage.

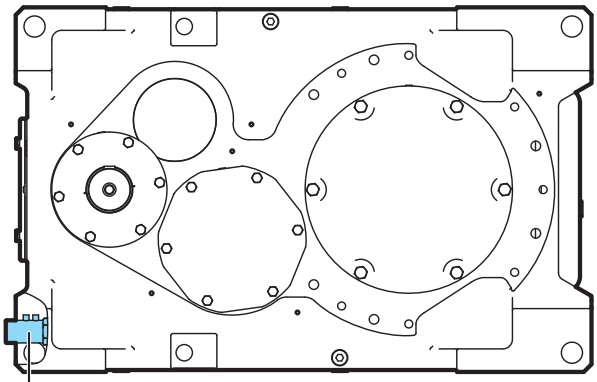

Screw-in oil heater
with temperature sensor and thermostat

Possible heater power:

Gear unit	1.0 kW	1.3 kW	1.7 kW
SK 11..07	✓	✓	--
SK 12..07	✓	✓	✓
SK 13..07	✓	✓	✓
SK 15..07	✓	✓	✓

Painting

Type	Version	TFD [µm]	TFD total [µm]	EN 12944 Corro.-Cat.	Recommended use
F1	1 x 1-K dip-primed, red-brown (cast iron components) and 1 x Two-shot polyurethane primer (2-K-PUR primer)	40 60	60-100		For top-coat to be applied by customer
F2 Series	1 x 1-K dip-primed, red-brown (cast iron components) and 1 x 2-K polyurethane (2-K-PUR)HS finishing coat	40 50	50-90	C2	For indoor installation
F3.0	1 x 1-K dip-primed, red-brown (cast iron components) and 1 x Two-shot polyurethane primer (2-K-PUR primer) and 1 x 2-K polyurethane (2-K PUR)HS finishing coat	40 60 50	110-150	C2	For indoor and protected outdoor installation with low environmental contamination, e.g. open, unheated halls
F3.1	1 x 1-K dip-primed, red-brown (cast iron components) and 1 x Two-shot polyurethane primer (2-K-PUR primer) and 2 x 2-K polyurethane (2-K PUR)HS finishing coat	40 60 2x50	160-220	C3	For outdoor installation, city and industrial atmosphere with low contamination
F3.2	1 x 1-K dip-primed, red-brown (cast iron components) and 1 x Two-shot EP zinc phosphate primer and 1 x Two-shot polyurethane primer (2-K-PUR primer) and 2 x 2-K polyurethane (2-K PUR)HS finishing coat	40 50 60 2x50	210-250	C4	For outdoor installation, urban and industrial atmospheres with moderate environmental pollution
F3.3	1 x 1-K dip-primed, red-brown (cast iron components) and 2 x Two-shot EP zinc phosphate epoxy primer and 2 x 2-K polyurethane (2-K PUR)HS finishing coat	40 2x50 2x50	200-240	C5	For outdoor installation, urban and industrial atmospheres with high environmental pollution
F3.4	1 x 1-K dip-primed, red-brown (cast iron components) and 1 x Two-shot EP zinc phosphate epoxy primer and 1 x ALEXIT chemical resistant final coat	40 50 50	100-140		For normal chemical exposure
F3.5	1 x 1-K dip-primed, red-brown (cast iron components) and 1 x Two-shot EP zinc phosphate epoxy primer and 1 x ALEXIT final coat	40 50 50	100-140		Machinery for foodstuffs packaging
A	Additional anti-microbial coating for all paints types except F3.4 and F3.5	40			
Z	Compensation of contour depressions and crevices with seam sealer on polyurethane basis				

1-K = single component 2-K = two-component, TFD = Dry film thickness max. [µm], HS = high solids

Output flange (F, FK)

In addition to the six mounting faces of the housing, the gearbox can be equipped with various mounting flanges. The output flange is designed to accommodate the gearbox with the attached motor. However, the permissible motor weights (⇨📖 53) must not be exceeded.

Please contact us if you wish to use the mounting flange for the attachment of parts of the application. In this case, technical clarification is essential.

The attachment side of the flange is defined as follows:

A is on the output shaft side (Standard)
B is opposite the output shaft

The following types of output flanges are available:

- Block flange
- Collar flange
- VL2 / VL3 flange (agitators)

Flat output flange (block flange / B14 / with thread)

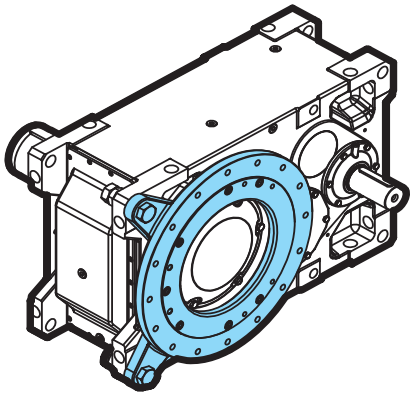

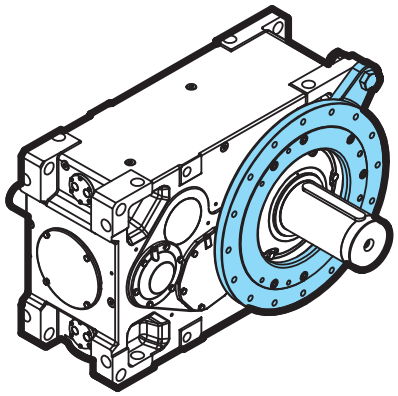

High output flange (collared flange / B5 / with through holes)

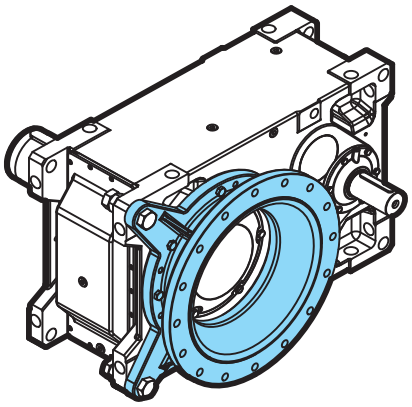

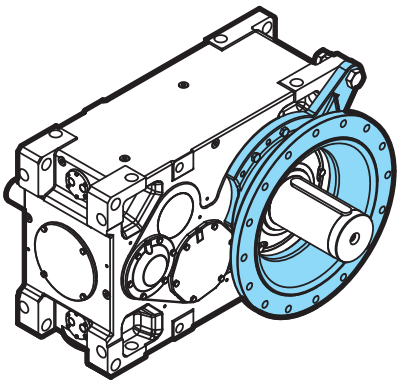

Reinforced output design VL2/VL3 (agitator flange)

VL2

Especially for agitators, NORD offers reinforced output shaft bearings with increased bearing spacing, to cope with high axial and radial forces and provide a longer operating life.
The spherical roller bearings are particularly suitable for longer agitator shafts, as errors in alignment are partially compensated.

Option VL3

"Drywell" solution with additional oil drip disc and leakage oil display or oil sensor.

Safety function

In case of any leakage in the lower sealing rings of the output shaft, the oil drips into a collecting space of the "Drywell" flange via the oil drip disc, and is detected by an oil sensor. Leakage into the agitator area is prevented.

Calculation of the bearing life on request.
For the calculation we require the following data:

Nominal power	**P**	[kW]
Output speed	$\mathbf{n_2}$	[min^{-1}]
Axial force	$\mathbf{F_A}$	[N]
Radial force	$\mathbf{F_R}$	[N]
Distance of the point of action of the radial force from the flange support	**C**	[mm]
Required bearing life	$\mathbf{L_h}$	[h]

Vertical gear unit installed outside

The upper shaft seals of vertical gear units installed outside must be protected against moisture ingress.
For this purpose, we offer two variants: Standard (H) and IP66 (H66).
The input shaft seal is sufficiently protected by an IEC adapter.

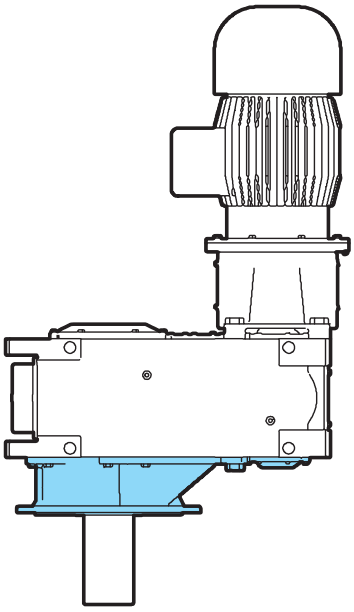

“True Drywell” solution [1)]

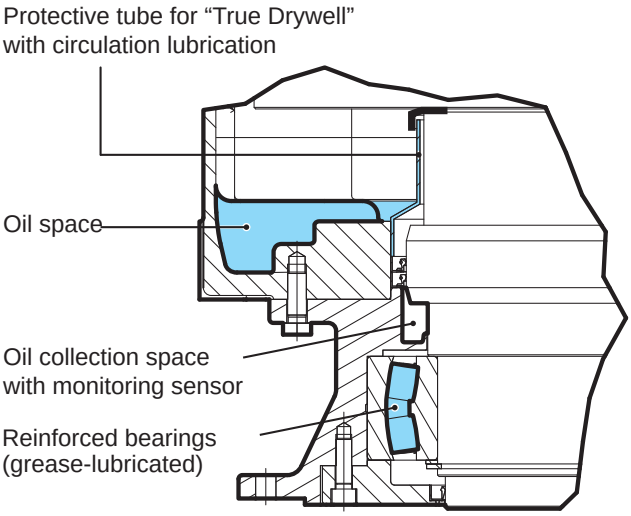

[1)] on request

Motor attached to IEC adapter with elastic coupling

For drive units with motors attached via IEC adapter, the standard output of the particular size according to DIN EN 50347 applies, however, with the maximum input power stated in the power and ratio tables.

For higher speeds than those stated in the power and ratio tables, special measures may be necessary. Please contact us.

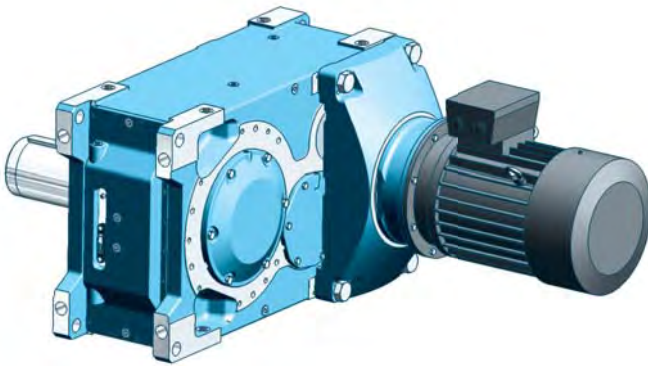

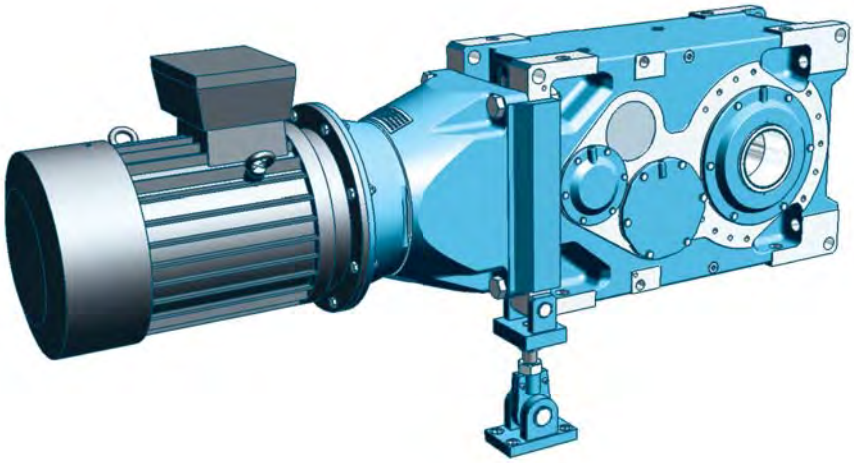

Maximum permissible motor weight according to size														
IEC	63	71	80	90	100	112	132	160	180	200	225	250	280	315
kg	25	30	40	50	60	80	100	200	250	350	500	700	1000	1500
Trans standard	315	355	400	450										
kg	1500	2200	3200	4400										

Provisional technical data

Motor swing bases (MS)

Motor swing bases are shaft mount gear units, in which the drive elements are mounted on a common base frame. The torque is taken up via torque supports

Basic components:
Gear units
Motor
Motor swing base

Optional components (can be combined):
- Elastic coupling, fluid coupling
- Drum brake, disc brake
- Radial / Axial fan
- Auxiliary drive
  (with freewheeling coupling / backstop / motor brake / etc.)
- Torque support, attachment plate
- Protective covers

Motor frame (MF)

Motor base frames are similar to motor swing bases, except that in place of a torque support, feet are attached to the base frame and the gearbox is not designed as a shaft mount unit.

Motor bed (MT)*)

The motor bed is an adjusting unit which is mounted on the gearbox. This enables a pulley drive to me mounted and tensioned on the drive. The motor bed is used for restricted installation situations, and if it is necessary to change the total ratio of the drive mechanically. The pulley drive can be used as a safety element, as it reacts to overload by slipping. Consultation is necessary for the use of a pulley drive as a safety element.

*) The designation "motor bracket" was previously used by NORD for pulley drive attachments. Our competitors call this attachment a "motor bed", whilst "motor bracket" is used for "sugar scoop". The designation by our competitors has been adopted here.

Example:

Motor swing base with fluid coupling, drum brake and auxiliary drive without protective covers

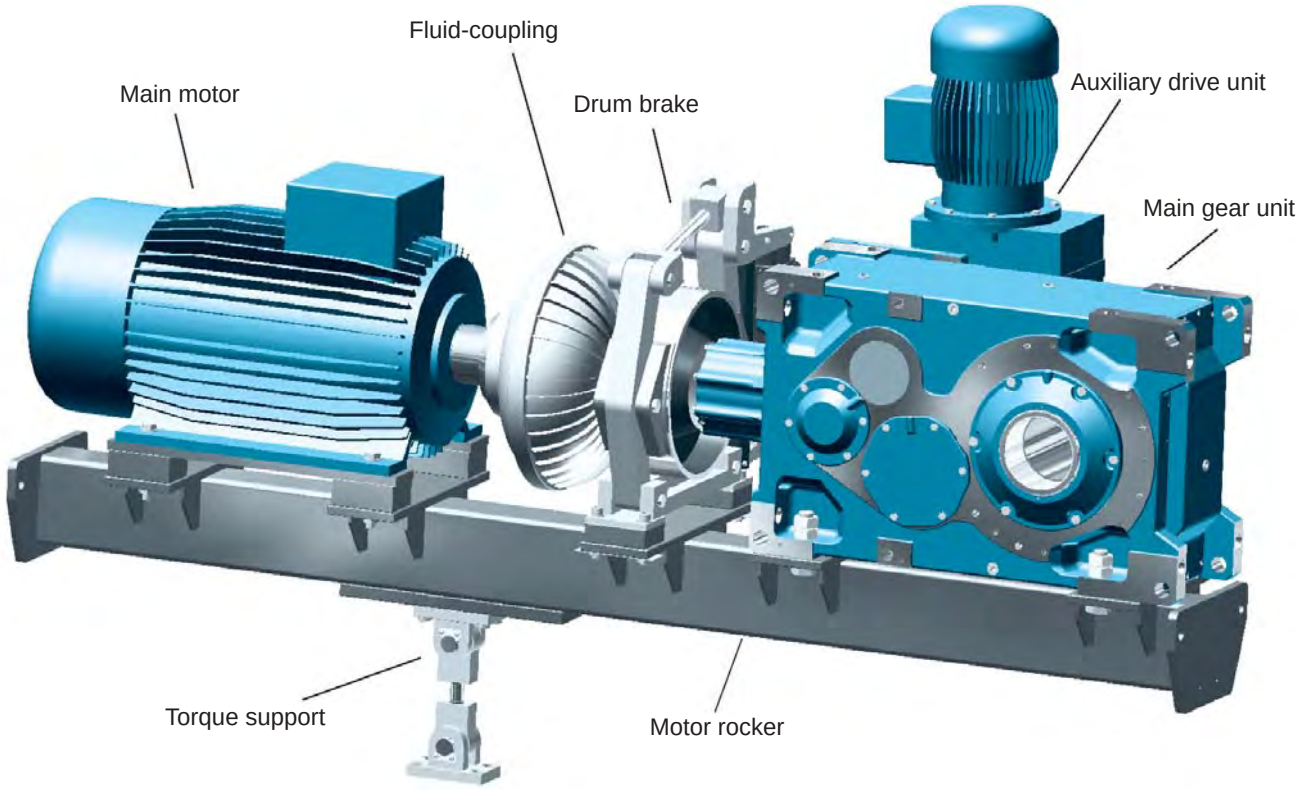

Couplings (input and output)

In addition to various flexible, fail-safe couplings (Claw coupling: e.g Rotex, Polynorm / Bolt coupling: e.g. Revolex KX-D) start-up couplings (turbo couplings; hydro couplings), and safety couplings (e.g. Autogard) can be supplied.
As output couplings, short length elastic fail-safe bolt couplings can be supplied, as well as gear couplings which can also span greater distances.
Please contact us if you have special requirements for input or output couplings.

Brakes

For motor swing bases and base frames optional disc or drum brakes are available, which can be installed between the motor and the gear unit. However, there is also the possibility of installing the disc brake on the free end of an input shaft.

For applications with a relatively high external moment of inertia (m_{af} > 2), such as is often the case with travelling drives, slewing gear, turntables, gate drives, agitators and surface ventilators it is recommended that a brake torque is selected, which is no greater than 1.2 times the nominal torque of the motor.
If higher brake torques are to be used, this should be taken into account in the selection of the gear unit. In this case, please contact us.
Please contact us if output brakes are necessary.
(Disc brakes, drum brakes)

Auxiliary drives (WX)

The auxiliary drive is flange-mounted with an intermediate flange, as a supplement to the main drive. The allocation can be obtained from the double drives. In order to prevent the auxiliary drive from idling, it is coupled via a freewheeling clutch.

The following options are available:
- With freewheeling clutch
- With freewheeling clutch and backstop in the flange (standard)
- With freewheeling clutch in the flange and separate backstop

The auxiliary drive should be equipped with a brake (e.g. motor brake) in order to prevent unintended rotation.

Monitoring devices and sensors (MO)

The following monitoring devices are available as options

- Oil inspection glass
- Oil level glass
- Oil dip-stick
- Pt100 (Temperature)
- Temperature sensor
- Bimetal switch
- Particle counter (oil)
- Water content (oil)
- Electrical contamination indicator for oil filter
- Optical contamination indicator for oil filter
- SPM nipple (vibration)
- Bearing condition monitor with evaluation unit
- Oil condition monitoring
- Pressure monitoring (oil circulation)
- Special requirements on request

Please contact us for detailed advice.

INFORMATION AND DEFINITIONS

Output and input shafts	Hollow shafts	Customer' shafts
Shaft tolerance - ø (DIN 748): ø14 – ø50 mm = ISO k6 > ø 50 mm = ISO m6	Hollow shaft tolerance - ø (DIN 748) according to ISO H7	Tolerance of customer's shaft journal according to ISO h6, highly irregular operation according to ISO k6.
Threaded holes: = ø 13 – ø 16 ⇒ M5 > ø 16 – ø 21 ⇒ M6 > ø 21 – ø 24 ⇒ M8 > ø 24 – ø 30 ⇒ M10 > ø 30 – ø 38 ⇒ M12 > ø 38 – ø 50 ⇒ M16 > ø 50 – ø 85 ⇒ M20 > ø 85 – ø 130 ⇒ M24 > ø 130 – ø 225 ⇒ M36 > ø 225 – ø 320 ⇒ M48	Splined hub section DIN 5480 9H	L = length of plug-in shaft DIN 5480 recommended fitting 8f Tolerance of customer's shaft journal for shrink discs according to ISO g6
Parallel keys according to DIN 6885, Sheets 1 and 3	Parallel keys according to DIN 6885, Sheets 1 and 3	Parallel keys according to DIN 6885, Sheets 1 and 3
Frame size	**Flanges**	**IEC and servo-adapter**
Shaft height "h" according to DIN 747	Tolerance of pitch circle - ø (DIN 42 948)	Tolerance of pitch circle - ø (DIN 42 948)
	Tolerance of flange centring - ø (DIN 42 948): ≤ ø 230 mm according to ISO j6, > ø 230 mm according to ISO h6,	Tolerance of flange centring according to ISO H7
g1Bre k1Bre mBre nBre pBre qBre qBre qABre } Brake motor dimensions	Some motor dimensions may change under certain circumstances.	The housings are made of cast material. Due to the manufacturing process, the unmachined surfaces may therefore deviate slightly from the nominal dimensions.

Provisional technical data

Structure of the power and gear ratio tables - nominal power type [1)]

Power table

Nominal drive speed
The actual motor speeds depend on the size of the motor, and may differ!

Nominal output speeds
Related to the nominal input speed and the nominal ratio

Gear unit type

i_N [-]	n_{1N} [min^{-1}]	n_{2N} [min^{-1}]		SK 7307	SK 8307	SK 9307	SK 10307	SK 11307	SK 12307	SK 13307	SK 15307	
400	1500	3,75	P_N				17					kW
	1000	2,50					11					
			M_{2max}				41					kNm
355	1500	4,23	P_N		14	18	17					kW
	1000	2,82			9	12	11					
			M_{2max}		31	40	38					kNm
.												
.												
.												
112	1500	13,39	P_N	33	43	57	73	103	141	197	341	kW
	1000	8,93		22	29	38	49	69	94	131	228	
			M_{2max}	24	30	41	50	75	101	142	242	kNm
100	1500	15,00	P_N	41	43	66	78	103	142	197	343	kW
	1000	10,00		27	29	44	52	69	94	132	228	
			M_{2max}	25	28	41	49	69	93	130	223	kNm

Nominal output P_N
with f_B = 1.0
and nominal input speed
n_{1N} = 1,500 min^{-1}

Nominal ratio
stepped according to standard series

Nominal torque M_{2max}
with f_B = 1.0

Nominal output P_N
with f_B = 1.0
and nominal input speed
n_{1N} = 1000 min^{-1}

[1)] Provisional technical data

Thermal power limit [1]

Nominal ratio of gear unit

Gear unit type

i_N [-]	CS type		SK 7307	SK 8307	SK 9307	SK 10307	SK 11307	SK 12307	SK 13307	SK 15307	
400	---	$P_{t0.20}$				75					kW
	FAN	$P_{tF.20}$				75					
	CC	$P_{tC.20}$				65					
355	---	$P_{t0.20}$		54	68	80					kW
	FAN	$P_{tF.20}$		54	68	80					
	CC	$P_{tC.20}$		33	65	65					
.											
.											
.											
112	---	$P_{t0.20}$	67	75	98	111	114	146	182	263	kW
	FAN	$P_{tF.20}$	67	75	98	111	114	146	182	263	
	CC	$P_{tC.20}$	33	33	65	65	157	219	281	281	
100	---	$P_{t0.20}$	69	80	100	117	117	154	192	286	kW
	FAN	$P_{tF.20}$	69	80	100	117	117	154	192	286	
	CC	$P_{tC.20}$	33	33	65	65	157	219	281	281	

Type of cooling

--- : no additional cooling
FAN : Fan cooling
CC : integrated water cooling

Additional thermal power limit ($P_{tC.20}$)
with integrated water cooling
for standard ambient conditions [2]

Additional thermal power limit ($P_{tF.20}$)
with built-in fan
with nominal speed n_{1N} = 1500 min^{-1}
for standard ambient conditions [2]

Thermal power limit ($P_{t0.20}$)
without additional cooling
for standard ambient conditions [2]

[1] Provisional technical data

[2] Standard ambient conditions ⇨ 📖66

Exact speed ratios [1)]

i_{tot}

i_N	SK 7307	SK 8307	SK 9307	SK 10307	SK 11307	SK 12307	SK 13307	SK 15307
400				385.13				
355		343.72	343.19	351.71				
.								
.								
.								
112	113.97	107.23	111.90	107.71	114.28	112.91	113.15	111.48
100	97.38	100.92	95.98	98.36	104.39	103.51	103.73	102.20

Nominal ratio of gear unit

Exact ratio

Moment of inertia [1)]

J_{red}

i_N	SK 7307	SK 8307	SK 9307	SK 10307	SK 11307	SK 12307	SK 13307	SK 15307	
400				0.06					kgm²
355		0.02	0.06	0.06					kgm²
.									
.									
.									
112	0.02	0.02	0.06	0.07	0.04	0.07	0.12	0.26	kgm²
100	0.02	0.02	0.07	0.09	0.04	0.07	0.12	0.27	kgm²

Nominal ratio of gear unit

Moment of inertia
relative to drive shaft

[1)] Provisional technical data

Catalogue information for the neutral language section (⇨ 📖 72 - 223)

Oil fill volumes

The stated filling quantities are for guidance only. The precise quantities vary depending on the exact gear ratio. When filling, always use the oil level screw as an indicator of the precise quantity of oil. The tables on pages 72 and 73 show the guideline quantities of lubricant in litres, depending on the installation position or the design.

The details stated in the table are in litres.

1) Circulation lubrication necessary for bevel gear stages
2) With circulation lubrication
3) Poor efficiency, observe heat balance
4) Reduced oil level with circulation lubrication.

Weights

** Provisional technical data
*** The weight data is based on gear units without oil and add-ons. The actual weights can be found in the gear unit documentation when delivered.

Catalogue tables and dimensioned drawings

** Provisional technical data

Structure of the power and gear ratio tables of gear motor type [1)]

250 kW → **Output of "gear motor" / Selection according to motor power**

n_1 = 1500 min^{-1} **at nominal speed and η = 1.0**

Nominal power of motor

Output speed at nominal motor speed

Output torque

Operating factor

Total speed ratio

Gear unit type

Weight without motor without IEC flange, without oil, with standard solid shaft

Dimensioned drawing: see page

P_1 kW	n_2 [rpm]	M_2 [kNm]	f_B [-]	i_{tot} [-]	$P_{t0.20}$ [kW]	CS [-]		kg	mm
250	42	55.7	1.3	34.93	154	B/Fan*	**SK 11307 - 315LA/4**	1460	170
	45	55.3	1.2	31.90	165	B/Fan*			
	51	46.8	1.6	28.56	159	B/Fan*			
	56	42.9	1.6	26.09	172	B/Fan*			
	65	35.8	1.8	22.32	178	A/Fan*			
	72	33.1	2.1	20.25	212	A/Fan	**SK 11207 - 315LA/4**	1390	170
	78	31.3	2.1	18.50	235	A/Fan			
	92	26.0	2.5	15.83	235	A/Fan			
	100	23.7	2.6	14.46	248	A/Fan			

Thermal power limit
for standard ambient conditions [2)]

optional cooling system related to standard ambient conditions [2)] :

--- : no additional cooling necessary

Fan : Fan

CC : integrated water cooling

A...H : external cooling unit

Fan* : The fan has a greater thermal power limit than the integrated water cooling

[1)]

Provisional technical data

[2)]

Standard ambient conditions

Ambient temperature:	20°C
Air circulation at installation location	large hall with good air circulation (v_L = 1.4 m/s)
Installation:	Foundation steel sub-construction
Installation altitude:	≤ 1000m above sea level
Installation position	Horizontal installation (M1 or M3)
Type of lubrication:	Oil-bath lubrication ((immersion lubrication)

Shaft configuration

The position of the required shaft outlets is determined from the direction of view from above onto the horizontal gear unit installation position or onto the mounting surface F1 or F2 (see mounting surfaces) according to the following diagram.

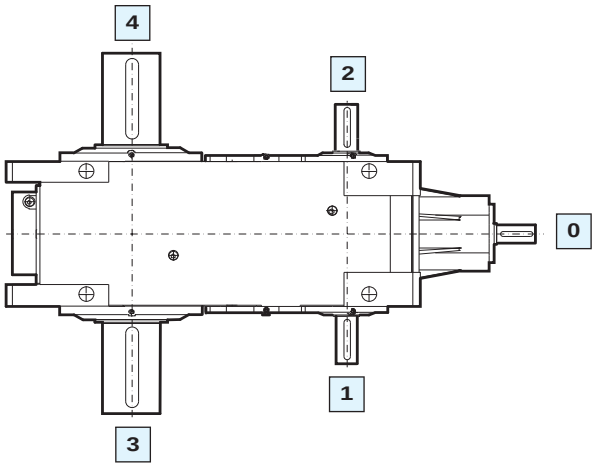

Configuration of components

The positions of attached elements such as e.g. backstops, fans, flange-mounted pumps, drive flanges, agitator flanges etc. is determined according to the same scheme as the shafts.

Example:

0	-
1	End of input shaft
2	Back stop
3	-
4	Output shaft and output flange

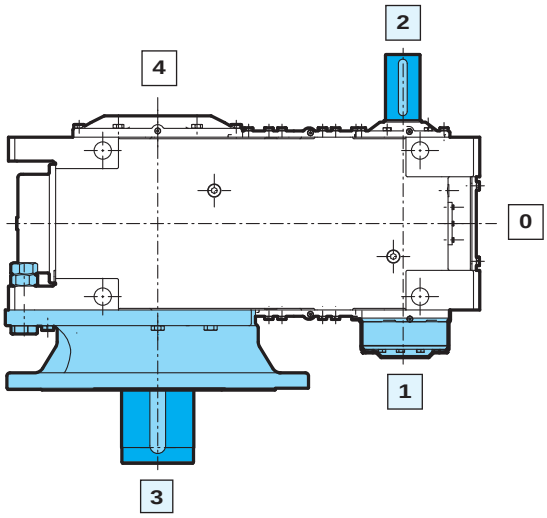

Terminal box and cable gland

With a view towards the motor fan, in the series-production model the terminal box is located on the left or at 9 o'clock and the cable gland at I (below)

If other configurations are required, these must be explicitly stated on the order. Please always contact us in case cable gland IV is required.

For size 63 to 132 brake motors, the cable gland is possible at I and III only.

Terminal box for installation position M1:
Helical gear units

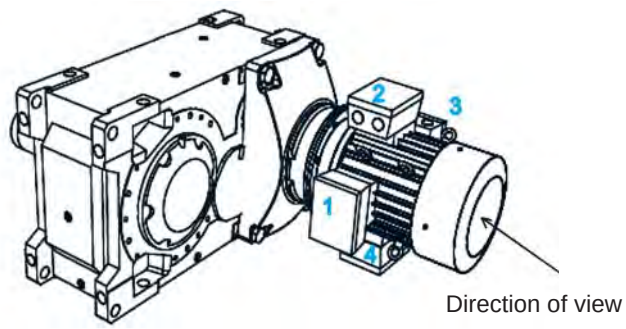

Bevel helical gear units:

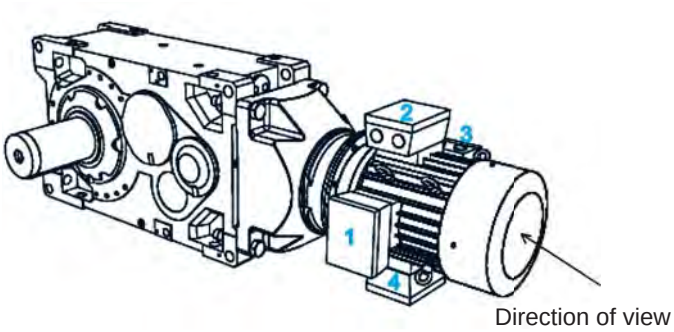

Cable input of terminal box:

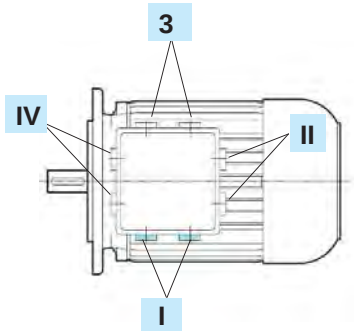

Installation positions

For gear units and geared motors, NORD specifies six installation positions from M1 to M6 as shown in the following diagrams.

Installation positions for helical gear unit SK ..207 and SK ..307

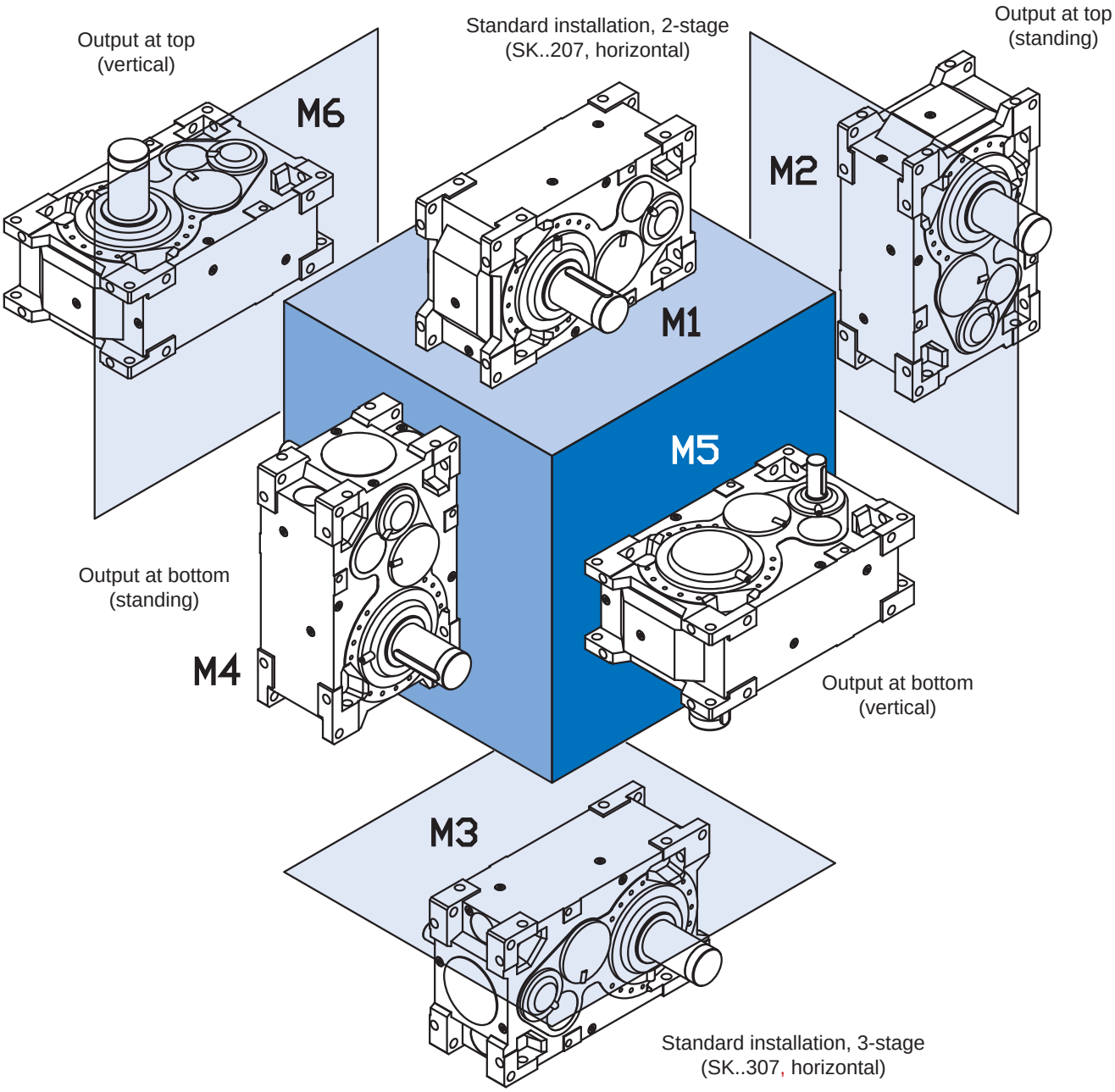

Installation positions for bevel gear unit SK ..407 and SK ..507

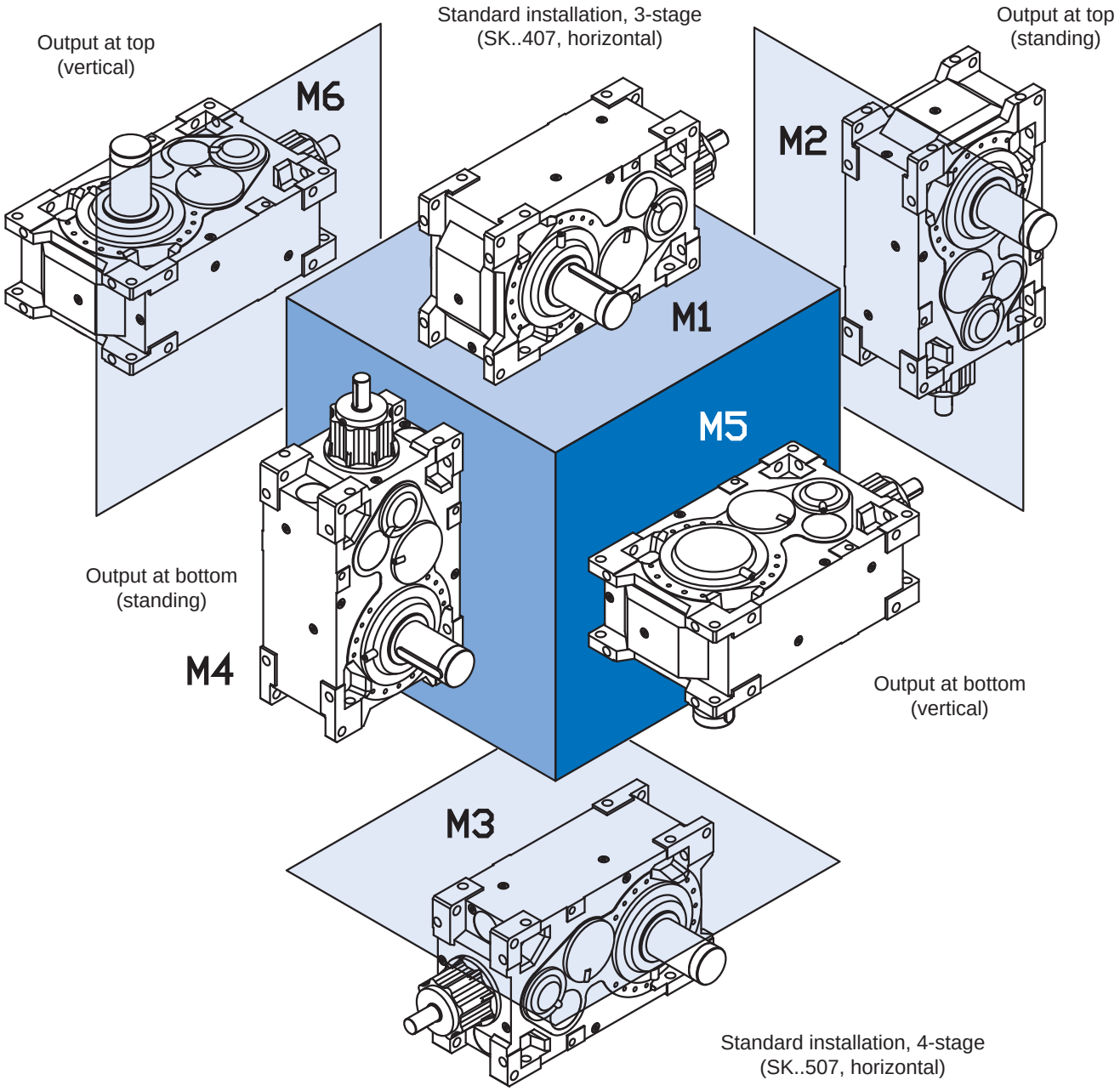

Mounting surfaces

The mounting surface specifies the side on which the gear unit is fixed. 6 mounting surfaces are available (F1 - F6).

In the following, the mounting surfaces for mounting position M1 are indicated.

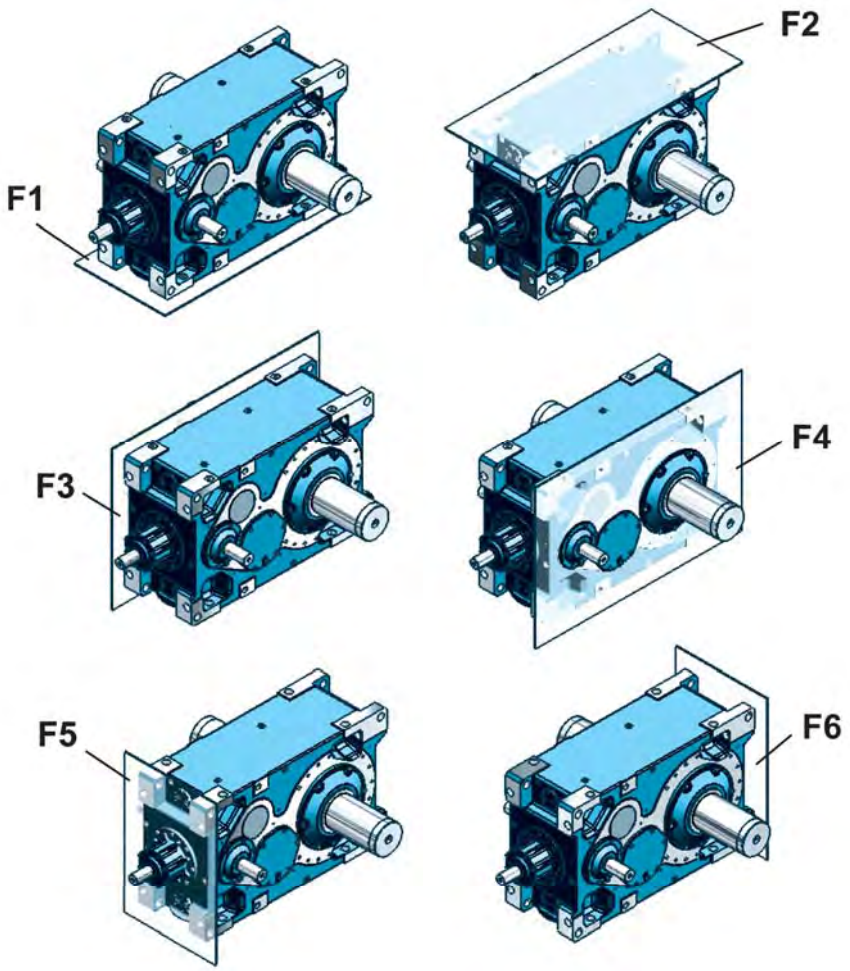

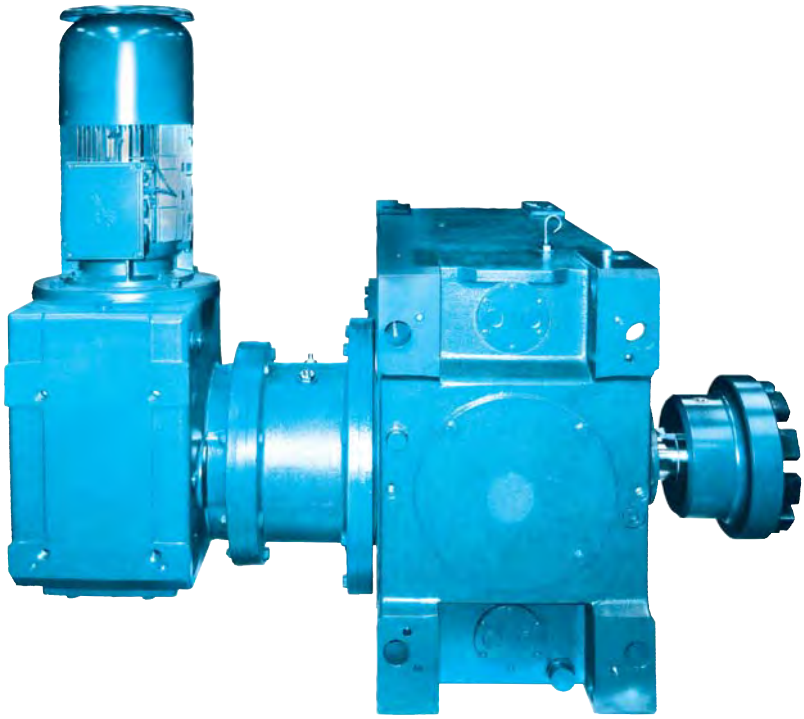

[L]	M1	M2	M3	M4 1)	M5 2)	M6 2)	max 3)
SK 7207	36	45	36	48	46	46	62
SK 7307	36	45	36	48	46	46	62
SK 8207	44	55	44	59	57	57	76
SK 8307	44	55	44	59	57	57	76
SK 9207	57	71	57	76	74	74	98
SK 9307	57	71	57	76	74	74	98
SK 10207	72	89	72	96	92	92	123
SK 10307	72	89	72	96	92	92	123
SK 11207	105	130 / 50 4)	105	140 / 40 4)	135 / 45 4)	135 / 45 4)	180
SK 11307	105	130 / 50 4)	105	140 / 40 4)	135 / 45 4)	135 / 45 4)	180
SK 12207	116	185 / 83 4)	116	203 / 65 4)	199 / 69 4)	199 / 69 4)	268
SK 12307	116	185 / 83 4)	116	203 / 65 4)	199 / 69 4)	199 / 69 4)	268
SK 13207	154	256 / 107 4)	154	290 / 73 4)	268 / 95 4)	268 / 95 4)	363
SK 13307	154	256 / 107 4)	154	290 / 73 4)	268 / 95 4)	268 / 95 4)	363
SK 15207	358	415 / 160 4)	335	450 / 125 4)	405 / 170 4)	412 / 163 4)	575
SK 15307	358	415 / 160 4)	335	450 / 125 4)	405 / 170 4)	412 / 163 4)	575

[L]	M1	M2	M3	M4 1)	M5 2)	M6 2)	max 3)
SK 7407	38	47	38	50	49	50	64
SK 7507	38	47	38	50	49	50	64
SK 8407	47	58	47	62	60	62	79
SK 8507	47	58	47	62	60	62	79
SK 9407	61	75	61	80	78	80	102
SK 9507	61	75	61	80	78	80	102
SK 10407	77	94	77	101	97	101	128
SK 10507	77	94	77	101	97	101	128
SK 11407	112	137	112	147	142	147	187
SK 11507	112	137	112	147	142	147	187
SK 12407	126	195	126	213	209	209	278
SK 12507	126	195	126	213	209	209	278
SK 13407	168	270	168	304	282	282	377
SK 13507	168	270	168	304	282	282	377
SK 15407	382	439	359	474	429	436	599
SK 15507	382	439	359	474	429	436	599

1), 2), 3), 4) / ** ⇨ 📖 65

[L]		R	VL2	VL3	WX	OT
SK 7207	SK 7407	+1	+8	+8	+5	+7
SK 7307	SK 7507	+1	+8	+8	+5	+7
SK 8207	SK 8407	+1	+8	+8	+5	+7
SK 8307	SK 8507	+1	+8	+8	+5	+7
SK 9207	SK 9407	+2	+12	+12	+5	+7
SK 9307	SK 9507	+2	+12	+12	+5	+7
SK 10207	SK 10407	+2	+12	+12	+5	+7
SK 10307	SK 10507	+2	+12	+12	+5	+7
SK 11207	SK 11407	+2	+15	+15	+5	+7
SK 11307	SK 11507	+2	+15	+15	+5	+7
SK 12207	SK 12407	+3	+20	+20	+6,5	+18
SK 12307	SK 12507	+3	+20	+20	+6,5	+18
SK 13207	SK 13407	+5	+25	+25	+6,5	+18
SK 13307	SK 13507	+5	+25	+25	+6,5	+18
SK 15207	SK 15407	+7	+30	+30	+6,5	+18
SK 15307	SK 15507	+7	+30	+30	+6,5	+18

[L]	CS1	CS2
A	+ 5	+ 5
B	+ 8	+ 8
C	+ 8	+ 8
D	+12	+12
E	+12	+12
F	+12	+12
G	+15	+15
H	+15	+15

** ⇨ 65

SK ..207
SK ..307

[kg]	V	L	A	AS
SK 7207	473	530	418	439
SK 7307	509	570	454	477
SK 8207	551	608	496	516
SK 8307	592	654	538	560
SK 9207	953	1068	824	865
SK 9307	1025	1148	895	940
SK 10207	1087	1201	957	999
SK 10307	1169	1292	1039	1084
SK 11207	1320	1483	1224	1296
SK 11307	1400	1593	1334	1406
SK 12207	1900	2095	1729	1831
SK 12307	2050	2251	1885	1987
SK 13207	2820	2980	2460	2600
SK 13307	3040	3200	2680	2820
SK 15207	4460	4645	4035	4180
SK 15307	4700	4885	4275	4420

[kg]	R	VFVL2/3	AFVL2/3	ASFVL2/3	F	FK
SK 7207	+ 7	+ 147	+ 79	+ 99	+ 51	+ 63
SK 7307	+ 5					
SK 8207	+ 8	+ 181	+ 97	+ 122	+ 63	+ 78
SK 8307	+ 6					
SK 9207	+ 11	+ 235	+ 126	+ 158	+ 82	+ 101
SK 9307	+ 8					
SK 10207	+ 14	+ 294	+ 157	+ 198	+ 103	+ 127
SK 10307	+ 10					
SK 11207	+ 20	+ 430	+ 230	+ 290	+ 150	+ 185
SK 11307	+ 15					
SK 12207	+ 35	+ 600	+ 340	+ 410	+ 205	+ 260
SK 12307	+ 15					
SK 13207	+ 35	+ 850	+ 470	+ 575	+ 295	+ 365
SK 13307	+ 15					
SK 15207	+ 60	+ 1430	+ 840	+ 970	+ 400	- - -
SK 15307	+ 35					

/ * ⇨ 65

SK ..207
SK ..307

[kg]	D	ED	WX	H (FAN)	H (AS)	CC
SK 7207	+ 10	+ 39	+ 38	+ 8	+ 3	+ 3
SK 7307						
SK 8207	+ 13	+ 48	+ 46	+ 9	+ 4	+ 4
SK 8307						
SK 9207	+ 16	+ 63	+ 60	+ 12	+ 5	+ 5
SK 9307						
SK 10207	+ 21	+ 79	+ 75	+ 15	+ 7	+ 7
SK 10307						
SK 11207	+ 30	+ 115	+ 110	+ 22	+ 10	+ 10
SK 11307						
SK 12207	+ 35	+ 115	+ 110	+ 25	+ 11	+ 12
SK 12307						
SK 13207	+ 40	+ 135	+ 110	+ 28	+ 13	+ 15
SK 13307						
SK 15207	+ 45	+ 135	+ 120	+ 35	+ 16	+ 15
SK 15307						

[kg]	IEC 100	IEC 112	IEC 132	IEC 160	IEC 180	IEC 200	IEC 225	IEC 250	IEC 280	IEC 315	TN 315	TN 355
SK 7207	+ 13	+ 13	+ 16,9	+ 74	+ 74	+ 70	+ 79	+ 94	+ 94	+ 115	+ 137	+ 166
SK 7307												
SK 8207	+ 13	+ 13	+ 16,9	+ 74	+ 74	+ 70	+ 79	+ 94	+ 94	+ 115	+ 137	+ 166
SK 8307												
SK 9207	+ 13	+ 13	+ 16,9	+ 76	+ 76	+ 72	+ 80	+ 96	+ 96	+ 117	+ 139	+ 168
SK 9307												
SK 10207	+ 13	+ 13	+ 16,9	+ 76	+ 76	+ 72	+ 80	+ 96	+ 96	+ 117	+ 139	+ 168
SK 10307												
SK 11207	- - -	- - -	- - -	+ 142	+ 142	+ 138	+ 147	+ 162	+ 162	+ 183	+ 205	+ 235
SK 11307												
SK 12207	- - -	- - -	- - -	+ 168	+ 168	+ 163	+ 172	+ 188	+ 188	+ 209	+ 231	+ 260
SK 12307												
SK 13207	- - -	- - -	- - -	+ 184	+ 184	+ 180	+ 189	+ 204	+ 204	+ 225	+ 247	+ 277
SK 13307												
SK 15207	- - -	- - -	- - -	+ 230	+ 230	+ 226	+ 235	+ 250	+ 250	+ 271	+ 293	+ 322
SK 15307												

/ * ⇨ 65

SK ..407
SK ..507

[kg]	V	L	A	AS
SK 7407	542	603	487	510
SK 7507	534	591	479	499
SK 8407	620	681	565	588
SK 8507	617	732	488	529
SK 9407	1044	1167	914	959
SK 9507	1056	1170	926	968
SK 10407	1178	1301	1048	1093
SK 10507	1200	1363	1104	1176
SK 11407	1460	1530	1320	1370
SK 11507	1535	1605	1395	1445
SK 12407	2185	2290	1965	2040
SK 12507	2195	2300	1975	2050
SK 13407	2970	3130	2610	2790
SK 13507	3190	3350	2830	2970
SK 15407	4770	4955	4345	4490
SK 15507	4945	5130	4520	4665

[kg]	R	VFVL2/3	AFVL2/3	ASFVL2/3	F	FK
SK 7407	+ 7	+ 147	+ 79	+ 99	+ 51	+ 63
SK 7507	+ 5					
SK 8407	+ 8	+ 181	+ 97	+ 122	+ 63	+ 78
SK 8507	+ 6					
SK 9407	+ 11	+ 235	+ 126	+ 158	+ 82	+ 101
SK 9507	+ 8					
SK 10407	+ 14	+ 294	+ 157	+ 198	+ 103	+ 127
SK 10507	+ 10					
SK 11407	+ 20	+ 426	+ 233	+ 289	+ 147	+ 183
SK 11507	+ 13					
SK 12407	+ 33	+ 602	+ 338	+ 409	+ 207	+ 258
SK 12507	+ 13					
SK 13407	+ 33	+ 292	+ 291	+ 292	+ 293	+ 365
SK 13507	+ 13					
SK 15407	+ 60	+ 1427	+ 839	+ 969	- - -	- - -
SK 15507	+ 33					

/ * ⇨ 65

SK ..407
SK ..507

[kg]	D	ED	WX	H (FAN)	H (AS)	CC
SK 7407	+ 10	+ 39	+ 38	+ 8	+ 3	+ 3
SK 7507						
SK 8407	+ 13	+ 48	+ 46	+ 9	+ 4	+ 4
SK 8507						
SK 9407	+ 16	+ 63	+ 60	+ 12	+ 5	+ 5
SK 9507						
SK 10407	+ 21	+ 79	+ 75	+ 15	+ 7	+ 7
SK 10507						
SK 11407	+ 30	+ 115	+ 110	+ 22	+ 10	+ 10
SK 11507						
SK 12407	+ 35	+ 115	+ 110	+ 25	+ 11	+ 12
SK 12507						
SK 13407	+ 40	+ 135	+ 110	+ 28	+ 13	+ 15
SK 13507						
SK 15407	+ 45	+ 135	+ 120	+ 35	+ 16	+ 15
SK 15507						

[kg]	IEC 100	IEC 112	IEC 132	IEC 160	IEC 180	IEC 200	IEC 225	IEC 250	IEC 280	IEC 315	TN 315	TN 355
SK 7407	+ 13	+ 13	+ 16,9	+ 91	+ 91	+ 87	+ 95	+ 111	+ 111	+ 132	+ 154	+ 183
SK 7507	+ 8,7	+ 8,7	+ 11,9									
SK 8407	+ 13	+ 13	+ 16,9	+ 91	+ 91	+ 87	+ 95	+ 111	+ 111	+ 132	+ 154	+ 183
SK 8507	+ 8,7	+ 8,7	+ 11,9									
SK 9407	+ 13	+ 13	+ 16,9	+ 91	+ 91	+ 87	+ 95	+ 111	+ 111	+ 132	+ 154	+ 183
SK 9507	+ 8,7	+ 8,7	+ 11,9									
SK 10407	+ 13	+ 13	+ 16,9	+ 91	+ 91	+ 87	+ 95	+ 111	+ 111	+ 132	+ 154	+ 183
SK 10507	+ 8,7	+ 8,7	+ 11,9									
SK 11407	- - -	- - -	- - -	+ 170	+ 170	+ 166	+ 175	+ 190	+ 190	+ 211	+ 233	+ 263
SK 11507				+ 144	+ 144	+ 140	+ 149	+ 164	+ 164	+ 185	+ 207	+ 237
SK 12407	- - -	- - -	- - -	+ 222	+ 222	+ 218	+ 226	+ 242	+ 242	+ 263	+ 285	+ 314
SK 12507				+ 176	+ 176	+ 172	+ 181	+ 196	+ 196	+ 217	+ 239	+ 269
SK 13407	- - -	- - -	- - -	+ 267	+ 267	+ 262	+ 271	+ 287	+ 287	+ 308	+ 330	+ 359
SK 13507				+ 216	+ 216	+ 212	+ 221	+ 236	+ 236	+ 257	+ 279	+ 308
SK 15407	- - -	- - -	- - -	+ 310	+ 310	+ 306	+ 315	+ 330	+ 330	+ 351	+ 373	+ 402
SK 15507				+ 240	+ 240	+ 236	+ 244	+ 260	+ 260	+ 281	+ 303	+ 332

/ * ⇨ 65

SK ..307

P_N | M_{2max}

i_N [-]	n_{1N} [min^{-1}]	n_{2N} [min^{-1}]		SK 7307	SK 8307	SK 9307	SK 10307	SK 11307	SK 12307	SK 13307	SK 15307	
400	1500	3,75	P_N				17					kW
	1000	2,50					11					
			M_{2max}				41					kNm
355	1500	4,23	P_N		14	18	17					kW
	1000	2,82			9	12	11					
			M_{2max}		31	40	38					kNm
315	1500	4,76	P_N	12	15	19	17					kW
	1000	3,17		8	10	13	11					
			M_{2max}	25	30	37	35					kNm
280	1500	5,36	P_N	14	17	19	17					kW
	1000	3,57		9	11	13	12					
			M_{2max}	24	31	34	32					kNm
250	1500	6,00	P_N	15	18	19	18					kW
	1000	4,00		10	12	13	12					
			M_{2max}	25	30	32	27					kNm
224	1500	6,70	P_N	16	18	20	18					kW
	1000	4,46		11	12	13	12					
			M_{2max}	24	25	27	25					kNm
200	1500	7,50	P_N	18	19	20	40					kW
	1000	5,00		12	12	13	27					
			M_{2max}	23	24	25	50					kNm
180	1500	8,33	P_N	18	28	37	43					kW
	1000	5,56		12	18	24	29					
			M_{2max}	21	30	40	49					kNm
160	1500	9,38	P_N	26	28	40	52					kW
	1000	6,25		17	18	27	34					
			M_{2max}	25	28	40	50					kNm
140	1500	10,71	P_N	27	35	47	56					kW
	1000	7,14		18	23	31	37					
			M_{2max}	24	31	40	49					kNm
125	1500	12,00	P_N	32	37	51	62					kW
	1000	8,00		21	24	34	42					
			M_{2max}	25	30	40	50					kNm
112	1500	13,39	P_N	33	43	57	73	103	141	197	341	kW
	1000	8,93		22	29	38	49	69	94	131	228	
			M_{2max}	24	30	41	50	75	101	142	242	kNm
100	1500	15,00	P_N	41	43	66	78	103	142	197	343	kW
	1000	10,00		27	29	44	52	69	94	132	228	
			M_{2max}	25	28	41	49	69	93	130	223	kNm
90	1500	16,67	P_N	42	55	72	88	114	172	238	411	kW
	1000	11,11		28	37	48	59	76	114	159	274	
			M_{2max}	24	31	40	50	65	97	133	229	kNm

** ⇨ 📖 65

SK ..307

P_{to} | P_{tF} | P_{tc}

i_N [-]	CS - Typ		SK 7307	SK 8307	SK 9307	SK 10307	SK 11307	SK 12307	SK 13307	SK 15307	
400	---	$P_{t0.20}$				75					kW
	FAN	$P_{tF.20}$				75					
	CC	$P_{tC.20}$				65					
355	---	$P_{t0.20}$		54	68	80					kW
	FAN	$P_{tF.20}$		54	68	80					
	CC	$P_{tC.20}$		33	65	65					
315	---	$P_{t0.20}$	48	52	70	77					kW
	FAN	$P_{tF.20}$	48	52	70	77					
	CC	$P_{tC.20}$	33	33	65	65					
280	---	$P_{t0.20}$	47	55	69	81					kW
	FAN	$P_{tF.20}$	47	55	69	81					
	CC	$P_{tC.20}$	33	33	65	65					
250	---	$P_{t0.20}$	49	55	72	81					kW
	FAN	$P_{tF.20}$	49	55	72	81					
	CC	$P_{tC.20}$	33	33	65	65					
224	---	$P_{t0.20}$	50	59	73	87					kW
	FAN	$P_{tF.20}$	50	59	73	87					
	CC	$P_{tC.20}$	33	33	65	65					
200	---	$P_{t0.20}$	53	68	76	100					kW
	FAN	$P_{tF.20}$	53	68	76	100					
	CC	$P_{tC.20}$	33	33	65	65					
180	---	$P_{t0.20}$	62	73	90	108					kW
	FAN	$P_{tF.20}$	62	73	90	108					
	CC	$P_{tC.20}$	33	33	65	65					
160	---	$P_{t0.20}$	65	73	95	108					kW
	FAN	$P_{tF.20}$	65	73	95	108					
	CC	$P_{tC.20}$	33	33	65	65					
140	---	$P_{t0.20}$	65	73	95	108					kW
	FAN	$P_{tF.20}$	65	73	95	108					
	CC	$P_{tC.20}$	33	33	65	65					
125	---	$P_{t0.20}$	69	75	100	111					kW
	FAN	$P_{tF.20}$	69	75	100	111					
	CC	$P_{tC.20}$	33	33	65	65					
112	---	$P_{t0.20}$	67	75	98	111	114	146	182	263	kW
	FAN	$P_{tF.20}$	67	75	98	111	114	146	182	263	
	CC	$P_{tC.20}$	33	33	65	65	157	219	281	281	
100	---	$P_{t0.20}$	69	80	100	117	117	154	192	286	kW
	FAN	$P_{tF.20}$	69	80	100	117	117	154	192	286	
	CC	$P_{tC.20}$	33	33	65	65	157	219	281	281	
90	---	$P_{t0.20}$	76	80	110	117	121	154	209	278	kW
	FAN	$P_{tF.20}$	76	80	110	117	121	154	209	278	
	CC	$P_{tC.20}$	33	33	65	65	157	219	281	281	

** ⇨ 📖 65

SK ..307

P_N | M_{2max}

i_N [-]	n_{1N} [min^{-1}]	n_{2N} [min^{-1}]		SK 7307	SK 8307	SK 9307	SK 10307	SK 11307	SK 12307	SK 13307	SK 15307	
80	1500	18,75	P_N	50	59	81	94	125	172	239	411	kW
	1000	12,50		34	39	54	63	83	115	159	274	
			M_{2max}	25	31	41	49	65	89	122	210	kNm
71	1500	21,13	P_N	53	71	87	116	167	229	315	547	kW
	1000	14,08		35	48	58	77	111	153	210	365	
			M_{2max}	24	31	40	51	75	101	142	243	kNm
63	1500	23,81	P_N	65	76	105	123	168	230	316	549	kW
	1000	15,87		43	51	70	82	112	153	211	366	
			M_{2max}	25	31	41	49	69	93	130	223	kNm
56	1500	26,79	P_N	69	84	113	142	206	283	394	672	kW
	1000	17,86		46	56	75	95	138	189	262	448	
			M_{2max}	24	29	40	50	72	98	137	234	kNm
50	1500	30,00	P_N	81	84	132	142	207	284	395	675	kW
	1000	20,00		54	56	88	95	138	189	263	450	
			M_{2max}	25	27	41	46	66	90	126	215	kNm
45	1500	33,33	P_N	82	109	140	176	263	359	495	868	kW
	1000	22,22		54	73	93	117	175	240	330	579	
			M_{2max}	23	31	40	51	75	101	142	242	kNm
40	1500	37,50	P_N	100	118	160	185	264	361	494	872	kW
	1000	25,00		67	79	107	123	176	241	329	581	
			M_{2max}	25	31	41	49	69	93	130	223	kNm
35,5	1500	42,25	P_N	105	125	169	230	326	445	619	1068	kW
	1000	28,17		70	83	113	153	217	297	413	712	
			M_{2max}	24	27	40	51	72	98	137	234	kNm
31,5	1500	47,62	P_N	113	125	209	240	326	446	621	1071	kW
	1000	31,75		75	83	139	160	218	297	414	714	
			M_{2max}	22	25	42	49	66	90	126	215	kNm
28	1500	53,57	P_N	113		220		412	564	788	1367	kW
	1000	35,71		75		147		275	376	525	911	
			M_{2max}	20		40		75	101	142	243	kNm
25	1500	60,00	P_N					413	566	790	1371	kW
	1000	40,00						275	378	527	914	
			M_{2max}					69	93	130	223	kNm
22,4	1500	66,96	P_N					454	693	875	1469	kW
	1000	44,64						303	462	583	979	
			M_{2max}					65	98	122	204	kNm

** ⇨ 📖 65

SK ..307

P_{to} | P_{tF} | P_{tc}

i_N [-]	CS - Typ		SK 7307	SK 8307	SK 9307	SK 10307	SK 11307	SK 12307	SK 13307	SK 15307	
80	---	$P_{t0.20}$	71	85	103	125	127	163	215	295	kW
	FAN	$P_{tF.20}$	71	85	103	125	127	163	215	295	
	CC	$P_{tC.20}$	33	33	65	65	157	219	281	281	
71	---	$P_{t0.20}$	76	85	110	125	131	168	215	304	kW
	FAN	$P_{tF.20}$	76	85	110	125	131	168	215	304	
	CC	$P_{tC.20}$	33	33	65	65	157	219	281	281	
63	---	$P_{t0.20}$	81	91	117	133	139	184	229	325	kW
	FAN	$P_{tF.20}$	81	91	117	133	139	184	229	325	
	CC	$P_{tC.20}$	33	33	65	65	157	219	281	281	
56	---	$P_{t0.20}$	83	88	121	129	135	184	237	336	kW
	FAN	$P_{tF.20}$	83	88	121	129	135	184	237	336	
	CC	$P_{tC.20}$	33	33	65	65	157	219	281	281	
50	---	$P_{t0.20}$	78	91	113	133	144	204	245	361	kW
	FAN	$P_{tF.20}$	78	91	113	133	144	204	245	361	
	CC	$P_{tC.20}$	33	33	65	65	157	219	281	281	
45	---	$P_{t0.20}$	81	91	117	133	154	197	245	348	kW
	FAN	$P_{tF.20}$	81	91	117	133	154	197	245	348	
	CC	$P_{tC.20}$	33	33	65	65	157	219	281	281	
40	---	$P_{t0.20}$	81	97	117	142	154	211	263	375	kW
	FAN	$P_{tF.20}$	81	97	117	142	154	211	263	375	
	CC	$P_{tC.20}$	33	33	65	65	157	219	281	281	
35,5	---	$P_{t0.20}$	86	97	125	142	154	211	263	390	kW
	FAN	$P_{tF.20}$	86	97	125	142	154	211	263	390	
	CC	$P_{tC.20}$	33	33	65	65	157	219	281	281	
31,5	---	$P_{t0.20}$	90	104	130	153	165	228	273	423	kW
	FAN	$P_{tF.20}$	90	104	130	153	165	228	273	423	
	CC	$P_{tC.20}$	33	33	65	65	157	219	281	281	
28	---	$P_{t0.20}$	93		135		159	204	263	390	kW
	FAN	$P_{tF.20}$	93		135		159	204	263	390	
	CC	$P_{tC.20}$	33		65		157	219	281	281	
25	---	$P_{t0.20}$					172	219	284	423	kW
	FAN	$P_{tF.20}$					172	219	284	423	
	CC	$P_{tC.20}$					157	219	281	281	
22,4	---	$P_{t0.20}$					178	228	296	464	kW
	FAN	$P_{tF.20}$					178	228	296	464	
	CC	$P_{tC.20}$					157	219	281	281	

** ⇨ 📖 65

SK ..207

P_N | M_{2max}

i_N [-]	n_{1N} [min·-1]	n_{2N} [min·-1]		SK 7207	SK 8207	SK 9207	SK 10207	SK 11207	SK 12207	SK 13207	SK 15207	
28	1500	53,57	P_N		172		265					kW
	1000	35,71			114		177					
			M_{2max}		31		49					kNm
25	1500	60,00	P_N	157	175	257	268					kW
	1000	40,00		105	116	171	179					
			M_{2max}	25	29	42	45					kNm
22,4	1500	66,96	P_N	159	212	269	321					kW
	1000	44,64		106	141	179	214					
			M_{2max}	23	29	40	46					kNm
20	1500	75,00	P_N	193	211	314	330	540	771	1076	1867	kW
	1000	50,00		129	141	209	220	360	514	718	1245	
			M_{2max}	24	28	40	43	70	98	137	235	kNm
18	1500	83,33	P_N	193	252	323	379	559	774	1080	1874	kW
	1000	55,56		128	168	215	253	372	516	720	1249	
			M_{2max}	22	28	37	43	66	90	126	216	kNm
16	1500	93,75	P_N	227	251	371	392	646	953	1306	2296	kW
	1000	62,50		152	168	247	261	431	635	870	1531	
			M_{2max}	23	26	37	40	65	95	129	226	kNm
14	1500	107,14	P_N	227	298	383	448	668	956	1349	2305	kW
	1000	71,43		151	199	255	299	445	637	899	1536	
			M_{2max}	21	26	35	40	62	88	122	208	kNm
12,5	1500	120,00	P_N	269	299	438	463	759	1073	1528	2567	kW
	1000	80,00		179	199	292	309	506	715	1018	1712	
			M_{2max}	21	24	35	38	61	87	121	204	kNm
11,2	1500	133,93	P_N	269	353	452	529	786	1097	1533	2577	kW
	1000	89,29		179	236	302	353	524	731	1022	1718	
			M_{2max}	19	25	33	38	58	81	111	188	kNm
10	1500	150,00	P_N	311	352	517	546	915	1295	1788	3098	kW
	1000	100,00		208	235	345	364	610	864	1192	2065	
			M_{2max}	20	23	33	36	58	82	115	193	kNm
9	1500	166,67	P_N	311	406	533	626	942	1301	1798	3110	kW
	1000	111,11		207	271	356	417	628	868	1199	2073	
			M_{2max}	18	22	31	36	54	75	106	177	kNm
8	1500	187,50	P_N	351	407	612	648	1084	1523	2122	3629	kW
	1000	125,00		234	271	408	432	722	1015	1415	2419	
			M_{2max}	18	21	31	34	54	77	108	180	kNm
7,1	1500	211,27	P_N	351		631		1084	1527	2129	3642	kW
	1000	140,85		234		421		722	1018	1420	2428	
			M_{2max}	16		29		50	71	99	166	kNm
6,3	1500	238,10	P_N					1225	1795	2459	4244	kW
	1000	158,73						816	1197	1640	2829	
			M_{2max}					49	70	100	163	kNm
5,6	1500	267,86	P_N					1225	1802	2467	4241	kW
	1000	178,57						817	1201	1645	2828	
			M_{2max}					45	65	92	150	kNm

** ⇨ 65

SK ..207

P_{to} | P_{tF} | P_{tc}

i_N [-]	CS - Typ		SK 7207	SK 8207	SK 9207	SK 10207	SK 11207	SK 12207	SK 13207	SK 15207	
28	---	$P_{t0.20}$		118		173					kW
	FAN	$P_{tF.20}$		118		173					
	CC	$P_{tC.20}$		53		104					
25	---	$P_{t0.20}$	110	129	160	190					kW
	FAN	$P_{tF.20}$	110	129	160	190					
	CC	$P_{tC.20}$	53	53	104	104					
22,4	---	$P_{t0.20}$	115	136	167	199					kW
	FAN	$P_{tF.20}$	115	136	167	199					
	CC	$P_{tC.20}$	53	53	104	104					
20	---	$P_{t0.20}$	121	151	176	221	212	272	355	513	kW
	FAN	$P_{tF.20}$	121	151	176	221	212	272	355	513	
	CC	$P_{tC.20}$	53	53	104	104	252	350	449	449	
18	---	$P_{t0.20}$	134	151	195	221	235	300	394	573	kW
	FAN	$P_{tF.20}$	134	151	195	221	235	300	394	573	
	CC	$P_{tC.20}$	53	53	104	104	252	350	449	449	
16	---	$P_{t0.20}$	134	160	195	234	235	317	394	573	kW
	FAN	$P_{tF.20}$	134	160	195	234	235	317	394	573	
	CC	$P_{tC.20}$	53	53	104	104	252	350	449	449	
14	---	$P_{t0.20}$	142	160	207	234	248	356	418	609	kW
	FAN	$P_{tF.20}$	142	160	207	234	248	356	418	609	
	CC	$P_{tC.20}$	53	53	104	104	252	350	449	449	
12,5	---	$P_{t0.20}$	142	181	207	266	262	335	444	649	kW
	FAN	$P_{tF.20}$	142	181	207	266	262	335	444	649	
	CC	$P_{tC.20}$	53	53	104	104	252	350	449	449	
11,2	---	$P_{t0.20}$	161	170	234	249	279	356	473	696	kW
	FAN	$P_{tF.20}$	161	170	234	249	279	356	473	696	
	CC	$P_{tC.20}$	53	53	104	104	252	350	449	449	
10	---	$P_{t0.20}$	151	181	219	266	279	356	473	696	kW
	FAN	$P_{tF.20}$	151	181	219	266	279	356	473	696	
	CC	$P_{tC.20}$	53	53	104	104	252	350	449	449	
9	---	$P_{t0.20}$	161	170	234	249	297	407	507	812	kW
	FAN	$P_{tF.20}$	161	170	234	249	297	407	507	812	
	CC	$P_{tC.20}$	53	53	104	104	252	350	449	449	
8	---	$P_{t0.20}$	161	194	234	285	319	407	546	749	kW
	FAN	$P_{tF.20}$	161	194	234	285	319	407	546	749	
	CC	$P_{tC.20}$	53	53	104	104	252	350	449	449	
7,1	---	$P_{t0.20}$	186		270		343	439	592	812	kW
	FAN	$P_{tF.20}$	186		270		343	439	592	812	
	CC	$P_{tC.20}$	53		104		252	350	449	449	
6,3	---	$P_{t0.20}$					319	407	546	749	kW
	FAN	$P_{tF.20}$					319	407	546	749	
	CC	$P_{tC.20}$					252	350	449	449	
5,6	---	$P_{t0.20}$					372	475	592	885	kW
	FAN	$P_{tF.20}$					372	475	592	885	
	CC	$P_{tC.20}$					252	350	449	449	

** ⇨ 65

SK ..207
SK ..307
i_{ges}

i_N	SK 7307	SK 8307	SK 9307	SK 10307	SK 11307	SK 12307	SK 13307	SK 15307
400				385,13				
355		343,72	343,19	351,71				
315	312,15	323,50	312,23	318,66				
280	283,89	279,07	283,96	291,01				
250	253,44	262,65	258,35	245,07				
224	230,49	214,99	218,38	223,80				
200	195,24	202,34	198,68	193,87				
180	177,56	169,95	172,76	177,05				
160	154,34	159,95	157,18	151,77				
140	140,37	137,98	135,24	138,60				
125	125,31	129,87	123,04	125,57				
112	113,97	107,23	111,90	107,71	114,28	112,91	113,15	111,48
100	97,38	100,92	95,98	98,36	104,39	103,51	103,73	102,20
90	88,56	87,06	87,32	89,12	89,30	88,55	87,64	87,37
80	79,07	81,94	79,41	81,38	81,58	81,18	80,34	80,10
71	71,91	67,07	72,25	68,54	70,40	69,56	70,66	69,62
63	60,91	63,12	61,07	62,59	64,31	63,77	64,78	63,82
56	55,39	53,99	55,56	55,14	55,01	54,55	54,73	54,56
50	49,04	50,82	49,13	50,35	50,25	50,01	50,17	50,02
45	44,60	43,84	44,70	45,62	44,70	44,26	44,94	43,83
40	39,81	41,26	40,65	41,66	40,83	40,58	41,20	40,18
35,5	36,21	33,77	36,98	35,08	34,93	34,71	34,81	34,35
31,5	30,67	31,79	31,26	32,04	31,90	31,82	31,91	31,49
28	27,89		28,44		28,56	28,22	28,28	27,86
25					26,09	25,87	25,92	25,54
22,4					22,32	22,13	21,90	21,84

i_N	SK 7207	SK 8207	SK 9207	SK 10207	SK 11207	SK 12207	SK 13207	SK 15207
28		27,90		28,76				
25	25,34	26,26	25,63	26,26				
22,4	23,05	21,72	23,31	22,38				
20	19,72	20,44	19,94	20,44	20,25	20,01	20,05	19,76
18	17,94	17,20	18,14	17,72	18,50	18,34	18,38	18,11
16	15,62	16,19	15,79	16,19	15,83	15,69	15,53	15,48
14	14,20	13,63	14,37	14,05	14,46	14,39	14,24	14,19
12,5	12,38	12,83	12,52	12,83	12,71	12,66	12,40	12,48
11,2	11,26	10,89	11,39	11,22	11,61	11,60	11,37	11,44
10	9,89	10,25	10,00	10,25	9,91	9,93	10,11	9,78
9	8,99	8,66	9,10	8,93	9,05	9,10	9,26	8,96
8	7,87	8,15	7,96	8,15	7,87	7,93	7,98	7,80
7,1	7,16		7,24		7,19	7,27	7,31	7,15
6,3					6,31	6,16	6,38	6,04
5,6					5,77	5,64	5,85	5,54

** ⇨ 📖 65

SK ..207
SK ..307
J_{red}

i_N	SK 7307	SK 8307	SK 9307	SK 10307	SK 11307	SK 12307	SK 13307	SK 15307	
400				0,06					kgm²
355		0,02	0,06	0,06					kgm²
315	0,02	0,02	0,06	0,07					kgm²
280	0,02	0,02	0,07	0,07					kgm²
250	0,02	0,02	0,07	0,09					kgm²
224	0,02	0,03	0,09	0,09					kgm²
200	0,03	0,03	0,09	0,06					kgm²
180	0,03	0,02	0,06	0,06					kgm²
160	0,02	0,02	0,06	0,08					kgm²
140	0,02	0,02	0,08	0,08					kgm²
125	0,02	0,02	0,08	0,06					kgm²
112	0,02	0,02	0,06	0,07	0,04	0,07	0,12	0,26	kgm²
100	0,02	0,02	0,07	0,09	0,04	0,07	0,12	0,27	kgm²
90	0,02	0,03	0,09	0,08	0,04	0,08	0,13	0,29	kgm²
80	0,03	0,03	0,08	0,11	0,04	0,08	0,13	0,29	kgm²
71	0,03	0,04	0,11	0,10	0,06	0,10	0,18	0,39	kgm²
63	0,04	0,04	0,10	0,06	0,06	0,10	0,18	0,39	kgm²
56	0,04	0,04	0,06	0,10	0,07	0,12	0,20	0,44	kgm²
50	0,04	0,04	0,10	0,12	0,07	0,12	0,21	0,45	kgm²
45	0,04	0,05	0,12	0,10	0,10	0,18	0,33	0,71	kgm²
40	0,05	0,05	0,09	0,13	0,11	0,19	0,33	0,71	kgm²
35,5	0,05	0,06	0,13	0,14	0,12	0,22	0,39	0,85	kgm²
31,5	0,05	0,06	0,14	0,10	0,13	0,22	0,40	0,86	kgm²
28	0,06		0,10		0,24	0,43	0,77	1,66	kgm²
25					0,25	0,44	0,78	1,68	kgm²
22,4					0,30	0,53	0,93	2,01	kgm²
i_N	**SK 7207**	**SK 8207**	**SK 9207**	**SK 10207**	**SK 11207**	**SK 12207**	**SK 13207**	**SK 15207**	
28		0,03		0,08					kgm²
25	0,03	0,03	0,08	0,09					kgm²
22,4	0,03	0,05	0,08	0,12					kgm²
20	0,04	0,05	0,11	0,12	0,22	0,40	0,71	1,52	kgm²
18	0,04	0,06	0,12	0,16	0,23	0,41	0,73	1,56	kgm²
16	0,06	0,07	0,15	0,16	0,27	0,48	0,85	1,82	kgm²
14	0,06	0,09	0,16	0,22	0,28	0,49	0,87	1,88	kgm²
12,5	0,08	0,09	0,22	0,24	0,45	0,80	1,43	3,07	kgm²
11,2	0,09	0,13	0,22	0,30	0,46	0,82	1,46	3,16	kgm²
10	0,12	0,13	0,29	0,32	0,64	1,13	2,01	4,33	kgm²
9	0,12	0,18	0,30	0,44	0,65	1,16	2,06	4,45	kgm²
8	0,17	0,18	0,41	0,46	0,82	1,45	2,58	5,56	kgm²
7,1	0,17		0,44		0,85	1,50	2,67	5,76	kgm²
6,3					0,92	1,63	2,90	6,26	kgm²
5,6					1,15	2,04	3,63	7,83	kgm²

** ⇨ 65

3 kW
7,5 kW

n_1 = 1000 min^{-1}

P_1 kW	n_2 [rpm]	M_2 [kNm]	f_B [-]	iges [-]	$P_{t0.20}$ [kW]	CS [-]		kg	mm
3	3,2	9,0	2,8	312,15	48	---	**SK 7307 - 132S/6**	509	170
	3,5	8,2	3,0	283,89	47	---			
4	3,2	11,9	2,1	312,15	48	---	**SK 7307 - 132M/6**	509	170
	3,5	10,9	2,2	283,89	47	---			
	3,9	9,8	2,6	253,44	49	---			
	4,3	8,9	2,7	230,49	50	---			
	2,9	13,2	2,3	343,72	54	---	**SK 8307 - 132M/6**	592	170
	3,1	12,3	2,4	323,50	52	---			
	3,6	10,6	2,9	279,07	55	---			
	3,8	10,1	3,0	262,65	55	---			
	2,6	14,7	2,8	385,13	75	---	**SK 10307 - 132M/6**	1169	170
	2,8	13,6	2,8	351,71	80	---			
	3,1	12,3	2,8	318,66	77	---			
	3,4	11,2	2,8	291,01	81	---			
	4,1	9,3	2,9	245,07	81	---			
	4,5	8,5	2,9	223,80	87	---			
5,5	3,2	16,4	1,5	312,15	48	---	**SK 7307 - 132M/6**	509	170
	3,5	15,0	1,6	283,89	47	---			
	3,9	13,5	1,9	253,44	49	---			
	4,3	12,2	2,0	230,49	50	---			
	5,1	10,3	2,2	195,24	53	---			
	5,6	9,4	2,2	177,56	62	---			
	2,9	18,1	1,7	343,72	54	---	**SK 8307 - 132M/6**	592	170
	3,1	16,9	1,8	323,50	52	---			
	3,6	14,6	2,1	279,07	55	---			
	3,8	13,8	2,2	262,65	55	---			
	4,7	11,2	2,3	214,99	59	---			
	4,9	10,7	2,2	202,34	68	---			
	2,9	18,1	2,2	343,19	68	---	**SK 9307 - 132M/6**	1025	170
	3,2	16,4	2,3	312,23	70	---			
	3,5	15,0	2,3	283,96	69	---			
	3,9	13,5	2,4	258,35	72	---			
	4,6	11,4	2,4	218,38	73	---			
	5,0	10,5	2,4	198,68	76	---			
	2,6	20,2	2,0	385,13	75	---	**SK 10307 - 132M/6**	1169	170
	2,8	18,8	2,0	351,71	80	---			
	3,1	16,9	2,0	318,66	77	---			
	3,4	15,4	2,1	291,01	81	---			
	4,1	12,8	2,1	245,07	81	---			
	4,5	11,7	2,1	223,80	87	---			
7,5	3,9	18,4	1,4	253,44	49	---	**SK 7307 - 160M/6**	509	170
	4,3	16,7	1,5	230,49	50	---			
	5,1	14,0	1,6	195,24	53	---			
	5,6	12,8	1,6	177,56	62	---			
	6,5	11,0	2,3	154,34	65	---			
	7,1	10,1	2,4	140,37	65	---			
	8,0	9,0	2,8	125,31	69	---			
	8,8	8,1	3,0	113,97	67	---			
	3,6	19,9	1,5	279,07	55	---	**SK 8307 - 160M/6**	592	170

** ⇨ 65

7,5 kW
15 kW

n_1 = 1000 min^{-1}

P_1 kW	n_2 [rpm]	M_2 [kNm]	f_B [-]	iges [-]	$P_{t0.20}$ [kW]	CS [-]		kg	mm
7,5	3,8	18,8	1,6	262,65	55	---	**SK 8307 - 160M/6**	592	170
	4,7	15,2	1,7	214,99	59	---			
	4,9	14,6	1,6	202,34	68	---			
	5,9	12,1	2,5	169,95	73	---			
	6,3	11,4	2,5	159,95	73	---			
	2,9	24,7	1,6	343,19	68	---	**SK 9307 - 160M/6**	1025	170
	3,2	22,4	1,7	312,23	70	---			
	3,5	20,5	1,7	283,96	69	---			
	3,9	18,4	1,7	258,35	72	---			
	4,6	15,6	1,8	218,38	73	---			
	5,0	14,3	1,8	198,68	76	---			
	2,6	27,5	1,5	385,13	75	---	**SK 10307 - 160M/6**	1169	170
	2,8	25,6	1,5	351,71	80	---			
	3,1	23,1	1,5	318,66	77	---			
	3,4	21,1	1,5	291,01	81	---			
	4,1	17,5	1,6	245,07	81	---			
	4,5	15,9	1,6	223,80	87	---			
11	6,5	16,2	1,6	154,34	65	---	**SK 7307 - 160L/6**	509	170
	7,1	14,8	1,6	140,37	65	---			
	8,0	13,1	1,9	125,31	69	---			
	8,8	11,9	2,0	113,97	67	---			
	10	10,5	2,4	97,38	69	---			
	11	9,6	2,5	88,56	76	---			
	5,9	17,8	1,7	169,95	73	---	**SK 8307 - 160L/6**	592	170
	6,3	16,7	1,7	159,95	73	---			
	7,2	14,6	2,1	137,98	73	---			
	7,7	13,6	2,2	129,87	75	---			
	9,3	11,3	2,6	107,23	75	---			
	9,9	10,6	2,6	100,92	80	---			
	5,8	18,1	2,2	170,76	90	---	**SK 9307 - 160L/6**	1025	170
	6,4	16,4	2,4	157,18	95	---			
	7,4	14,2	2,8	135,24	95	---			
	5,2	20,2	2,5	193,87	100	---	**SK 10307 - 160L/6**	1169	170
	5,6	18,8	2,6	177,05	108	---			
15	8,0	17,9	1,4	125,31	69	---	**SK 7307 - 180L/6**	509	170
	8,8	16,3	1,5	113,97	67	---			
	10	14,3	1,8	97,38	69	---			
	11	13,0	1,8	88,56	76	---			
	13	11,0	2,3	79,07	71	---			
	14	10,2	2,4	71,91	76	---			
	16	9,0	2,8	60,91	81	---			
	7,2	19,9	1,5	137,98	73	---	**SK 8307 - 180L/6**	592	170
	7,7	18,6	1,6	129,87	75	---			
	9,3	15,4	1,9	107,23	75	---			
	9,9	14,5	1,9	100,92	80	---			
	11	13,0	2,3	87,06	80	---			
	12	11,9	2,6	81,94	85	---			
	5,8	24,7	1,6	170,76	90	---	**SK 9307 - 180L/6**	1025	170

** ⇨ 65

15 kW
22 kW

n_1 = 1000 min^{-1}

P_1 kW	n_2 [rpm]	M_2 [kNm]	f_B [-]	iges [-]	$P_{t0.20}$ [kW]	CS [-]		kg	mm
15	6,4	22,4	1,8	157,18	95	---	**SK 9307 - 180L/6**	1025	170
	7,4	19,4	2,1	135,24	95	---			
	8,1	17,7	2,3	123,04	100	---			
	8,9	16,1	2,5	111,90	98	---			
	10	14,3	2,8	95,98	100	---			
	5,2	27,5	1,8	193,87	100	---	**SK 10307 - 180L/6**	1169	170
	5,6	25,6	1,9	177,05	108	---			
	6,6	21,7	2,3	151,77	108	---			
	7,2	19,9	2,5	138,60	108	---			
	8,0	17,9	2,8	125,57	111	---			
18,5	10	17,7	1,4	97,38	69	---	**SK 7307 - 200L/6**	509	170
	11	16,1	1,5	88,56	76	---			
	13	13,6	1,9	79,07	71	---			
	14	12,6	1,9	71,91	76	---			
	16	11,0	2,3	60,91	81	---			
	18	9,8	2,5	55,39	83	---			
	20	8,8	2,9	49,04	78	---			
	22	8,0	2,9	44,60	81	---			
	7,7	22,9	1,3	129,87	75	---	**SK 8307 - 200L/6**	592	170
	9,3	19,0	1,6	107,23	75	---			
	9,9	17,8	1,6	100,92	80	---			
	11	16,1	1,9	87,06	80	---			
	12	14,7	2,1	81,94	85	---			
	15	11,8	2,6	67,07	85	---			
	16	11,0	2,8	63,12	91	---			
	5,8	30,5	1,3	170,76	90	---	**SK 9307 - 200L/6**	1025	170
	6,4	27,6	1,4	157,18	95	---			
	7,4	23,9	1,7	135,24	95	---			
	8,1	21,8	1,8	123,04	100	---			
	8,9	19,9	2,0	111,90	98	---			
	10	17,7	2,3	95,98	100	---			
	11	16,1	2,5	87,32	110	---			
	13	13,6	3,0	79,41	103	---			
	5,2	34,0	1,5	193,87	100	---	**SK 10307 - 200L/6**	1169	170
	5,6	31,5	1,6	177,05	108	---			
	6,6	26,8	1,9	151,77	108	---			
	7,2	24,5	2,0	138,60	108	---			
	8,0	22,1	2,3	125,57	111	---			
	9,3	19,0	2,6	107,71	111	---			
	10	17,7	2,8	98,36	117	---			
22	13	16,2	1,6	79,07	71	---	**SK 7307 - 200L/6**	509	170
	14	15,0	1,6	71,91	76	---			
	16	13,1	1,9	60,91	81	---			
	18	11,7	2,1	55,39	83	---			
	20	10,5	2,4	49,04	78	---			
	22	9,6	2,4	44,60	81	---			
	9,3	22,6	1,3	107,23	75	---	**SK 8307 - 200L/6**	592	170
	9,9	21,2	1,3	100,92	80	---			
	11	19,1	1,6	87,06	80	---			
	12	17,5	1,7	81,94	85	---			
	15	14,0	2,2	67,07	85	---			
	16	13,1	2,3	63,12	91	---			
	19	11,1	2,6	53,99	88	---			

** ⇨ 65

22 kW
30 kW

n_1 = 1000 min^{-1}

P_1 kW	n_2 [rpm]	M_2 [kNm]	f_B [-]	iges [-]	$P_{t0.20}$ [kW]	CS [-]		kg	mm
22	20	10,5	2,6	50,82	91	---	**SK 8307 - 200L/6**	592	170
	7,4	28,4	1,4	135,24	95	---	**SK 9307 - 200L/6**	1025	170
	8,1	25,9	1,5	123,04	100	---			
	8,9	23,6	1,7	111,90	98	---			
	10	21,0	1,9	95,98	100	---			
	11	19,1	2,1	87,32	110	---			
	13	16,2	2,5	79,41	103	---			
	14	15,0	2,7	72,25	110	---			
	5,6	37,5	1,3	177,05	108	---	**SK 10307 - 200L/6**	1169	170
	6,6	31,8	1,6	151,77	108	---			
	7,2	29,2	1,7	138,60	108	---			
	8,0	26,3	1,9	125,57	111	---			
	9,3	22,6	2,2	107,71	111	---			
	10	21,0	2,3	98,36	117	---			
	11	19,1	2,6	89,12	117	---			
	12	17,5	2,8	81,38	125	---			
30	16	17,9	1,4	60,91	81	---	**SK 7307 - 225M/6**	509	170
	18	15,9	1,5	55,39	83	---			
	20	14,3	1,8	49,04	78	---			
	22	13,0	1,8	44,60	81	---			
	25	11,5	2,2	39,81	81	---			
	28	10,2	2,4	36,21	86	---			
	33	8,7	2,5	30,67	90	---			
	36	8,0	2,5	27,89	93	---			
	12	23,9	1,3	81,94	85	---	**SK 8307 - 225M/6**	592	170
	15	19,1	1,6	67,07	85	---			
	16	17,9	1,7	63,12	91	---			
	19	15,1	1,9	53,99	88	---			
	20	14,3	1,9	50,82	91	---			
	23	12,5	2,4	43,84	91	---			
	24	11,9	2,6	41,26	97	---			
	30	9,6	2,8	33,77	97	---			
	31	9,2	2,7	31,79	104	---			
	10	28,7	1,4	95,98	100	---	**SK 9307 - 225M/6**	1025	170
	11	26,0	1,5	87,32	110	---			
	13	22,0	1,9	79,41	103	---			
	14	20,5	1,9	72,25	110	---			
	16	17,9	2,3	61,07	117	---			
	18	15,9	2,5	55,56	121	---			
	20	14,3	2,9	49,13	113	---			
	8,0	35,8	1,4	125,57	111	---	**SK 10307 - 225M/6**	1169	170
	9,3	30,8	1,6	107,71	111	---			
	10	28,7	1,7	98,36	117	---			
	11	26,0	1,9	89,12	117	---			
	12	23,9	2,0	81,38	125	---			
	15	19,1	2,6	68,54	125	---			
	16	17,9	2,7	62,59	133	---			
	8,8	32,6	2,3	114,28	114	---	**SK 11307 - 225M/6**	1460	170
	9,6	29,8	2,3	104,39	117	---			
	11	26,0	2,5	89,30	121	---			
	12	23,9	2,7	81,58	127	---			

** ⇨ 65

37 kW
45 kW

n_1 = 1000 min^{-1}

P_1 kW	n_2 [rpm]	M_2 [kNm]	f_B [-]	iges [-]	$P_{t0.20}$ [kW]	CS [-]		kg	mm
37	20	17,7	1,4	49,04	78	---	**SK 7307 - 250M/6**	509	170
	22	16,1	1,4	44,60	81	---			
	25	14,1	1,8	39,81	81	---			
	28	12,6	1,9	36,21	86	---			
	33	10,7	2,1	30,67	90	---			
	36	9,8	2,0	27,89	93	---			
	39	9,1	2,8	25,34	110	---	**SK 7207 - 250M/6**	509	170
	43	8,2	2,8	23,05	115	---			
	16	22,1	1,4	63,12	91	---	**SK 8307 - 250M/6**	592	170
	19	18,6	1,6	53,99	88	---			
	20	17,7	1,5	50,82	91	---			
	23	15,4	2,0	43,84	91	---			
	24	14,7	2,1	41,26	97	---			
	30	11,8	2,3	33,77	97	---			
	31	11,4	2,2	31,79	104	---			
	13	27,2	1,5	79,41	103	---	**SK 9307 - 250M/6**	1025	170
	14	25,2	1,6	72,25	110	---			
	16	22,1	1,9	61,07	117	---			
	18	19,6	2,0	55,56	121	---			
	20	17,7	2,3	49,13	113	---			
	22	16,1	2,5	44,70	117	---			
	25	14,1	2,9	40,65	117	---			
	9,3	38,0	1,3	107,71	111	---	**SK 10307 - 250M/6**	1169	170
	10	35,3	1,4	98,36	117	---			
	11	32,1	1,6	89,12	117	---			
	12	29,4	1,7	81,38	125	---			
	15	23,6	2,1	68,54	125	---			
	16	22,1	2,2	62,59	133	---			
	18	19,6	2,5	55,14	129	---			
	20	17,7	2,6	50,35	133	---			
	8,8	40,2	1,9	114,28	114	---	**SK 11307 - 250M/6**	1460	170
	9,6	36,8	1,9	104,39	117	---			
	11	32,1	2,0	89,30	121	---			
	12	29,4	2,2	81,58	127	---			
	9,7	36,4	2,6	103,51	154	---	**SK 12307 - 250M/6**	2110	170
45	25	17,2	1,5	39,81	81	---	**SK 7307 - 280S/6**	509	170
	28	15,3	1,6	36,21	86	---			
	33	13,0	1,7	30,67	90	---			
	36	11,9	1,7	27,89	93	---			
	39	11,0	2,3	25,34	110	---	**SK 7207 - 280S/6**	509	170
	43	10,0	2,3	23,05	115	---			
	51	8,4	2,9	19,72	121	---			
	56	7,7	2,9	17,94	134	---			
	23	18,7	1,6	43,84	91	---	**SK 8307 - 280S/6**	592	170
	24	17,9	1,7	41,26	97	---			
	30	14,3	1,9	33,77	97	---			
	31	13,9	1,8	31,79	104	---			
	36	11,9	2,6	27,90	118	---	**SK 8207 - 280S/6**	592	170

** ⇨ 📖 65

45 kW
55 kW

n_1 = 1000 min^{-1}

P_1 kW	n_2 [rpm]	M_2 [kNm]	f_B [-]	iges [-]	$P_{t0.20}$ [kW]	CS [-]		kg	mm
45	38	11,3	2,6	26,26	129	---	**SK 8207 - 280S/6**	592	170
	16	26,9	1,5	61,07	117	---	**SK 9307 - 280S/6**	1025	170
	18	23,9	1,7	55,56	121	---			
	20	21,5	1,9	49,13	113	---			
	22	19,5	2,0	44,70	117	---			
	25	17,2	2,4	40,65	117	---			
	27	15,9	2,5	36,98	125	---			
	11	39,1	1,3	89,12	117	---	**SK 10307 - 280S/6**	1169	170
	12	35,8	1,4	81,38	125	---			
	15	28,7	1,8	68,54	125	---			
	16	26,9	1,8	62,59	133	---			
	18	23,9	2,1	55,14	129	---			
	20	21,5	2,1	50,35	133	---			
	22	19,5	2,6	45,62	133	---			
	24	17,9	2,7	41,66	142	---			
	8,8	48,8	1,5	114,28	114	---	**SK 11307 - 280S/6**	1460	170
	9,6	44,8	1,5	104,39	117	---			
	11	39,1	1,7	89,30	121	---			
	12	35,8	1,8	81,58	127	---			
	14	30,7	2,4	70,40	131	---			
	16	26,9	2,6	64,31	139	---			
	8,9	48,3	2,1	112,91	146	---	**SK 12307 - 280S/6**	2110	170
	9,7	44,3	2,1	103,51	154	---			
	11	39,1	2,5	88,55	154	---			
	12	35,8	2,5	81,18	163	---			
	9,6	44,8	2,9	103,73	192	---	**SK 13307 - 280S/6**	3040	170
55	33	15,9	1,4	30,67	90	---	**SK 7307 - 280M/6**	509	170
	36	14,6	1,4	27,89	93	---			
	39	13,5	1,9	25,34	110	---	**SK 7207 - 280M/6**	509	170
	43	12,2	1,9	23,05	115	---			
	51	10,3	2,3	19,72	121	---			
	56	9,4	2,3	17,94	134	---			
	64	8,2	2,8	15,62	134	---			
	70	7,5	2,7	14,20	142	---			
	23	22,8	1,3	43,84	91	---	**SK 8307 - 280M/6**	592	170
	24	21,9	1,4	41,26	97	---			
	30	17,5	1,5	33,77	97	---			
	31	16,9	1,5	31,79	104	---			
	36	14,6	2,1	27,90	118	---	**SK 8207 - 280M/6**	592	170
	38	13,8	2,1	26,26	129	---			
	46	11,4	2,6	21,72	136	---			
	49	10,7	2,6	20,44	151	---			
	18	29,2	1,4	55,56	121	---	**SK 9307 - 280M/6**	1025	170
	20	26,3	1,6	49,13	113	---			
	22	23,9	1,7	44,70	117	---			
	25	21,0	2,0	40,65	117	---			
	27	19,5	2,1	36,98	125	---			
	32	16,4	2,5	31,26	130	---			
	35	15,0	2,7	28,44	135	---			

** ⇨ 65

55 kW
75 kW

n_1 = 1000 min^{-1}

P_1 kW	n_2 [rpm]	M_2 [kNm]	f_B [-]	iges [-]	$P_{t0.20}$ [kW]	CS [-]		kg	mm
55	15	35,0	1,4	68,54	125	---	**SK 10307 - 280M/6**	1169	170
	16	32,8	1,5	62,59	133	---			
	18	29,2	1,7	55,14	129	---			
	20	26,3	1,7	50,35	133	---			
	22	23,9	2,1	45,62	133	---			
	24	21,9	2,2	41,66	142	---			
	29	18,1	2,8	35,08	142	---			
	31	16,9	2,9	32,04	153	---			
	11	47,8	1,4	89,30	121	---	**SK 11307 - 280M/6**	1460	170
	12	43,8	1,5	81,58	127	---			
	14	37,5	2,0	70,40	131	---			
	16	32,8	2,1	64,31	139	---			
	18	29,2	2,5	55,01	135	---			
	20	26,3	2,5	50,25	144	---			
	8,9	59,0	1,7	112,91	146	---	**SK 12307 - 280M/6**	2110	170
	9,7	54,1	1,7	103,51	154	---			
	11	47,8	2,0	88,55	154	---			
	12	43,8	2,0	81,18	163	---			
	14	37,5	2,7	69,56	168	---			
	16	32,8	2,8	63,77	184	---			
	8,8	59,7	2,4	113,15	182	---	**SK 13307 - 280M/6**	3040	170
	9,6	54,7	2,4	103,73	192	---			
	11	47,8	2,8	87,64	209	---			
	12	43,8	2,8	80,34	215	---			
75	39	18,4	1,4	25,34	110	---	**SK 7207 - 315S/6**	509	170
	43	16,7	1,4	23,05	115	---			
	51	14,0	1,7	19,72	121	---			
	56	12,8	1,7	17,94	134	---			
	64	11,2	2,0	15,62	134	---			
	70	10,2	2,0	14,20	142	---			
	81	8,8	2,4	12,38	142	---			
	89	8,0	2,4	11,26	161	---			
	101	7,1	2,8	9,89	151	---			
	111	6,5	2,8	8,99	161	---			
	36	19,9	1,5	27,90	118	---	**SK 8207 - 315S/6**	592	170
	38	18,8	1,5	26,26	129	---			
	46	15,6	1,9	21,72	136	---			
	49	14,6	1,9	20,44	151	---			
	58	12,3	2,2	17,20	151	---			
	62	11,6	2,2	16,19	160	---			
	73	9,8	2,6	13,63	160	---			
	78	9,2	2,7	12,83	181	---			
	25	28,7	1,4	40,65	117	---	**SK 9307 - 315S/6**	1025	170
	27	26,5	1,5	36,98	125	---			
	32	22,4	1,9	31,26	130	---			
	35	20,5	1,9	28,44	135	---			
	39	18,4	2,3	25,63	160	---	**SK 9207 - 315S/6**	1025	170
	43	16,7	2,4	23,31	167	---			
	50	14,3	2,8	19,94	176	---			
	55	13,0	2,9	18,14	195	---			

** ⇨ 65

75 kW
90 kW

n_1 = 1000 min^{-1}

P_1 kW	n_2 [rpm]	M_2 [kNm]	f_B [-]	iges [-]	$P_{t0.20}$ [kW]	CS [-]		kg	mm
75	22	32,6	1,6	45,62	133	---	**SK 10307 - 315S/6**	1169	170
	24	29,8	1,6	41,66	142	---			
	29	24,7	2,1	35,08	142	---			
	31	23,1	2,1	32,04	153	---			
	35	20,5	2,4	28,76	173	---	**SK 10207 - 315S/6**	1169	170
	38	18,8	2,4	26,26	190	---			
	45	15,9	2,9	22,38	199	---			
	49	14,6	2,9	20,44	221	---			
	14	51,2	1,5	70,40	131	---	**SK 11307 - 315S/6**	1460	170
	16	44,8	1,5	64,31	139	---			
	18	39,8	1,8	55,01	135	---			
	20	35,8	1,9	50,25	144	---			
	22	32,6	2,3	44,70	154	---			
	24	29,8	2,3	40,83	154	---			
	29	24,7	2,9	34,93	154	---			
	31	23,1	2,9	31,90	165	---			
	11	65,1	1,5	88,55	154	---	**SK 12307 - 315S/6**	2110	170
	12	59,7	1,5	81,18	163	---			
	14	51,2	2,0	69,56	168	---			
	16	44,8	2,1	63,77	184	---			
	18	39,8	2,5	54,55	184	---			
	20	35,8	2,5	50,01	204	---			
	8,8	81,4	1,7	113,15	182	---	**SK 13307 - 315S/6**	3040	170
	9,6	74,6	1,7	103,73	192	---			
	11	65,1	2,0	87,64	209	---			
	12	59,7	2,0	80,34	215	---			
	14	51,2	2,8	70,66	215	---			
	15	47,8	2,7	64,78	229	---			
90	51	16,9	1,4	19,72	121	---	**SK 7207 - 315M/6**	509	170
	56	15,3	1,4	17,94	134	---			
	64	13,4	1,7	15,62	134	---			
	70	12,3	1,7	14,20	142	---			
	81	10,6	2,0	12,38	142	---			
	89	9,7	2,0	11,26	161	---			
	101	8,5	2,3	9,89	151	---			
	111	7,7	2,3	8,99	161	---			
	127	6,8	2,6	7,87	161	---			
	140	6,1	2,6	7,16	186	---			
	46	18,7	1,6	21,72	136	---	**SK 8207 - 315M/6**	592	170
	49	17,5	1,6	20,44	151	---			
	58	14,8	1,9	17,20	151	---			
	62	13,9	1,9	16,19	160	---			
	73	11,8	2,2	13,63	160	---			
	78	11,0	2,2	12,83	181	---			
	92	9,3	2,6	10,89	170	---			
	98	8,8	2,6	10,25	181	---			
	32	26,9	1,5	31,26	130	---	**SK 9307 - 315M/6**	1025	170
	35	24,6	1,6	28,44	135	---			
	39	22,0	1,9	25,63	160	---	**SK 9207 - 315M/6**	1025	170
	43	20,0	2,0	23,31	167	---			
	50	17,2	2,3	19,94	176	---			
	55	15,6	2,4	18,14	195	---			

** ⇨ 65

90 kW
110 kW

n_1 = 1000 min^{-1}

P_1 kW	n_2 [rpm]	M_2 [kNm]	f_B [-]	iges [-]	$P_{t0.20}$ [kW]	CS [-]		kg	mm
90	63	13,6	2,7	15,79	195	---	**SK 9207 - 315M/6**	1025	170
	70	12,3	2,9	14,37	207	---			
	22	39,1	1,3	45,62	133	---	**SK 10307 - 315M/6**	1169	170
	24	35,8	1,4	41,66	142	---			
	29	29,6	1,7	35,08	142	---			
	31	27,7	1,8	32,04	153	---			
	35	24,6	2,0	28,76	173	---	**SK 10207 - 315M/6**	1169	170
	38	22,6	2,0	26,26	190	---			
	45	19,1	2,4	22,38	199	---			
	49	17,5	2,5	20,44	221	---			
	56	15,3	2,8	17,72	221	---			
	62	13,9	2,9	16,19	234	---			
	18	47,8	1,5	55,01	135	---	**SK 11307 - 315M/6**	1460	170
	20	43,0	1,5	50,25	144	---			
	22	39,1	1,9	44,70	154	---			
	24	35,8	1,9	40,83	154	---			
	29	29,6	2,4	34,93	154	---			
	31	27,7	2,4	31,90	165	---			
	14	61,4	1,7	69,56	168	---	**SK 12307 - 315M/6**	2110	170
	16	53,7	1,7	63,77	184	---			
	18	47,8	2,1	54,55	184	---			
	20	43,0	2,1	50,01	204	---			
	23	37,4	2,7	44,26	197	---			
	25	34,4	2,7	40,58	211	---			
	8,8	97,7	1,5	113,15	182	---	**SK 13307 - 315M/6**	3040	170
	9,6	89,5	1,5	103,73	192	---			
	11	78,1	1,7	87,64	209	---			
	12	71,6	1,7	80,34	215	---			
	14	61,4	2,3	70,66	215	---			
	15	57,3	2,3	64,78	229	---			
	18	47,8	2,9	54,73	237	---			
	20	43,0	2,9	50,17	245	---			
	9,0	95,5	2,5	111,48	263	---	**SK 15307 - 315M/6**	4700	170
	9,8	87,7	2,5	102,20	263	---			
110	64	16,4	1,4	15,62	134	---	**SK 7207 - 315MA/6**	509	170
	70	15,0	1,4	14,20	142	---			
	81	13,0	1,6	12,38	142	---			
	89	11,8	1,6	11,26	161	---			
	101	10,4	1,9	9,89	151	---			
	111	9,5	1,9	8,99	161	---			
	127	8,3	2,1	7,87	161	---			
	140	7,5	2,1	7,16	186	---			
	58	18,1	1,5	17,20	151	---	**SK 8207 - 315MA/6**	592	170
	62	16,9	1,5	16,19	160	---			
	73	14,4	1,8	13,63	160	---			
	78	13,5	1,8	12,83	181	---			
	92	11,4	2,1	10,89	170	---			
	98	10,7	2,1	10,25	181	---			
	115	9,1	2,5	8,66	170	---			
	123	8,5	2,5	8,15	194	---			
	35	30,0	1,3	28,44	135	---	**SK 9307 - 315MA/6**	1025	170

** ⇨ 📖 65

110 kW
132 kW

n_1 = 1000 min^{-1}

P_1 kW	n_2 [rpm]	M_2 [kNm]	f_B [-]	iges [-]	$P_{t0.20}$ [kW]	CS [-]		kg	mm
110	39	26,9	1,6	25,63	160	---	**SK 9207 - 315MA/6**	1025	170
	43	24,4	1,6	23,31	167	---			
	50	21,0	1,9	19,94	176	---			
	55	19,1	2,0	18,14	195	---			
	63	16,7	2,2	15,79	195	---			
	70	15,0	2,3	14,37	207	---			
	80	13,1	2,7	12,52	207	---			
	88	11,9	2,7	11,39	234	---			
	29	36,2	1,4	35,08	142	---	**SK 10307 - 315MA/6**	1169	170
	31	33,9	1,4	32,04	153	---			
	35	30,0	1,6	28,76	173	---	**SK 10207 - 315MA/6**	1169	170
	38	27,6	1,6	26,26	190	---			
	45	23,3	2,0	22,38	199	---			
	49	21,4	2,0	20,44	221	---			
	56	18,8	2,3	17,72	221	---			
	62	16,9	2,4	16,19	234	---			
	71	14,8	2,7	14,05	234	---			
	78	13,5	2,8	12,83	266	---			
	22	47,8	1,6	44,70	154	---	**SK 11307 - 315MA/6**	1460	170
	24	43,8	1,6	40,83	154	---			
	29	36,2	2,0	34,93	154	---			
	31	33,9	2,0	31,90	165	---			
	35	30,0	2,5	28,56	159	---			
	38	27,6	2,5	26,09	170	---			
	45	23,3	2,8	22,32	178	---			
	14	75,0	1,4	69,56	168	---	**SK 12307 - 315MA/6**	2110	170
	16	65,7	1,4	63,77	184	---			
	18	58,4	1,7	54,55	184	---			
	20	52,5	1,7	50,01	204	---			
	23	45,7	2,2	44,26	197	---			
	25	42,0	2,2	40,58	211	---			
	29	36,2	2,7	34,71	211	---			
	31	33,9	2,7	31,82	228	---			
	11	95,5	1,4	87,64	209	---	**SK 13307 - 315MA/6**	3040	170
	12	87,5	1,4	80,34	215	---			
	14	75,0	1,9	70,66	215	---			
	15	70,0	1,9	64,78	229	---			
	18	58,4	2,4	54,73	237	---			
	20	52,5	2,4	50,17	245	---			
	22	47,8	3,0	44,94	245	---			
	24	43,8	3,0	41,20	263	---			
	9,0	116,7	2,1	111,48	263	---	**SK 15307 - 315MA/6**	4700	170
	9,8	107,2	2,1	102,20	263	---			
	11	95,5	2,4	87,37	263	---			
	12	87,5	2,4	80,10	263	---			
132	81	15,6	1,4	12,38	142	---	**SK 7207 - 315MB/6**	509	170
	89	14,2	1,4	11,26	161	---			
	101	12,5	1,6	9,89	151	---			
	111	11,4	1,6	8,99	161	---			
	127	9,9	1,8	7,87	161	---			
	140	9,0	1,8	7,16	186	---			

** ⇨ 65

132 kW

n_1 = 1000 min^{-1}

P_1 kW	n_2 [rpm]	M_2 [kNm]	f_B [-]	iges [-]	$P_{t0.20}$ [kW]	CS [-]		kg	mm
132	73	17,3	1,5	13,63	160	---	**SK 8207 - 315MB/6**	592	170
	78	16,2	1,5	12,83	181	---			
	92	13,7	1,8	10,89	170	---			
	98	12,9	1,8	10,25	181	---			
	115	11,0	2,0	8,66	170	---			
	123	10,2	2,1	8,15	194	---			
	43	29,3	1,4	23,31	167	---	**SK 9207 - 315MB/6**	1025	170
	50	25,2	1,6	19,94	176	---			
	55	22,9	1,6	18,14	195	---			
	63	20,0	1,9	15,79	195	---			
	70	18,0	1,9	14,37	207	---			
	80	15,8	2,2	12,52	207	---			
	88	14,3	2,3	11,39	234	---			
	100	12,6	2,6	10,00	219	---			
	110	11,5	2,7	9,10	234	---			
	35	36,0	1,3	28,76	173	---	**SK 10207 - 315MB/6**	1169	170
	38	33,2	1,4	26,26	190	---			
	45	28,0	1,6	22,38	199	---			
	49	25,7	1,7	20,44	221	---			
	56	22,5	1,9	17,72	221	---			
	62	20,3	2,0	16,19	234	---			
	71	17,8	2,3	14,05	234	---			
	78	16,2	2,3	12,83	266	---			
	89	14,2	2,7	11,22	249	---			
	98	12,9	2,8	10,25	266	---			
	22	57,3	1,3	44,70	154	---	**SK 11307 - 315MB/6**	1460	170
	24	52,5	1,3	40,83	154	---			
	29	43,5	1,7	34,93	154	---			
	31	40,7	1,6	31,90	165	---			
	35	36,0	2,1	28,56	159	---			
	38	33,2	2,1	26,09	170	---			
	45	28,0	2,3	22,32	178	---			
	49	25,7	2,7	20,25	212	---	**SK 11207 - 315MB/6**	1390	170
	54	23,3	2,8	18,50	235	---			
	18	70,0	1,4	54,55	184	---	**SK 12307 - 315MB/6**	2110	170
	20	63,0	1,4	50,01	204	---			
	23	54,8	1,8	44,26	197	---			
	25	50,4	1,9	40,58	211	---			
	29	43,5	2,3	34,71	211	---			
	31	40,7	2,2	31,82	228	---			
	35	36,0	2,8	28,22	204	---			
	39	32,3	2,9	25,87	219	---			
	14	90,0	1,6	70,66	215	---	**SK 13307 - 315MB/6**	3040	170
	15	84,0	1,6	64,78	229	---			
	18	70,0	2,0	54,73	237	---			
	20	63,0	2,0	50,17	245	---			
	22	57,3	2,5	44,94	245	---			
	24	52,5	2,5	41,20	263	---			
	9,0	140,1	1,7	111,48	263	---	**SK 15307 - 315MB/6**	4700	170
	9,8	128,6	1,7	102,20	263	---			
	11	114,6	2,0	87,37	263	---			
	12	105,1	2,0	80,10	263	---			
	14	90,0	2,7	69,62	263	---			

** ⇨ 65

132 kW
160 kW

n_1 = 1000 min^{-1}

P_1 kW	n_2 [rpm]	M_2 [kNm]	f_B [-]	iges [-]	$P_{t0.20}$ [kW]	CS [-]		kg	mm
132	16	78,8	2,8	63,82	263	---	**SK 15307 - 315MB/6**	4700	170
160	127	12,0	1,5	7,87	161	---	**SK 7207 - 315L/6**	509	170
	140	10,9	1,5	7,16	186	---			
	92	16,6	1,5	10,89	170	---	**SK 8207 - 315L/6**	592	170
	98	15,6	1,5	10,25	181	---			
	115	13,3	1,7	8,66	170	---			
	123	12,4	1,7	8,15	194	---			
	50	30,6	1,3	19,94	176	---	**SK 9207 - 315L/6**	1025	170
	55	27,8	1,3	18,14	195	---			
	63	24,3	1,5	15,79	195	---			
	70	21,8	1,6	14,37	207	---			
	80	19,1	1,8	12,52	207	---			
	88	17,4	1,9	11,39	234	---			
	100	15,3	2,2	10,00	219	---			
	110	13,9	2,2	9,10	234	---			
	126	12,1	2,6	7,96	234	---			
	138	11,1	2,6	7,24	270	---			
	45	34,0	1,3	22,38	199	---	**SK 10207 - 315L/6**	1169	170
	49	31,2	1,4	20,44	221	---			
	56	27,3	1,6	17,72	221	---			
	62	24,6	1,6	16,19	234	---			
	71	21,5	1,9	14,05	234	---			
	78	19,6	1,9	12,83	266	---			
	89	17,2	2,2	11,22	249	---			
	98	15,6	2,3	10,25	266	---			
	112	13,6	2,6	8,93	249	---			
	123	12,4	2,7	8,15	285	---			
	29	52,7	1,4	34,93	154	A/Fan*	**SK 11307 - 315L/6**	1460	170
	31	49,3	1,3	31,90	165	---			
	35	43,7	1,7	28,56	159	---			
	38	40,2	1,7	26,09	170	---			
	45	34,0	1,9	22,32	178	---			
	49	31,2	2,2	20,25	212	---	**SK 11207 - 315L/6**	1390	170
	54	28,3	2,3	18,50	235	---			
	63	24,3	2,7	15,83	235	---			
	69	22,1	2,8	14,46	248	---			
	23	66,4	1,5	44,26	197	---	**SK 12307 - 315L/6**	2110	170
	25	61,1	1,5	40,58	211	---			
	29	52,7	1,9	34,71	211	---			
	31	49,3	1,8	31,82	228	---			
	35	43,7	2,3	28,22	204	---			
	39	39,2	2,4	25,87	219	---			
	45	34,0	2,9	22,13	228	---			
	14	109,1	1,3	70,66	215	---	**SK 13307 - 315L/6**	3040	170
	15	101,9	1,3	64,78	229	---			
	18	84,9	1,6	54,73	237	---			
	20	76,4	1,7	50,17	245	---			
	22	69,5	2,0	44,94	245	---			
	24	63,7	2,0	41,20	263	---			
	29	52,7	2,6	34,81	263	---			
	31	49,3	2,6	31,91	273	---			
	9,0	169,8	1,4	111,48	263	---	**SK 15307 - 315L/6**	4700	170

** ⇨ 65

160 kW
200 kW

n_1 = 1000 min^{-1}

P_1 kW	n_2 [rpm]	M_2 [kNm]	f_B [-]	iges [-]	$P_{t0.20}$ [kW]	CS [-]		kg	mm
160	9,8	155,9	1,4	102,20	263	---	**SK 15307 - 315L/6**	4700	170
	11	138,9	1,6	87,37	263	---			
	12	127,3	1,6	80,10	263	---			
	14	109,1	2,2	69,62	263	---			
	16	95,5	2,3	63,82	263	---			
	18	84,9	2,8	54,56	263	---			
	20	76,4	2,8	50,02	263	---			
200	115	16,6	1,3	8,66	170	A/Fan*	**SK 8207 - 315LA/6**	592	170
	123	15,5	1,4	8,15	194	A/Fan*			
	80	23,9	1,5	12,52	207	---	**SK 9207 - 315LA/6**	1025	170
	88	21,7	1,5	11,39	234	---			
	100	19,1	1,7	10,00	219	---			
	110	17,4	1,8	9,10	234	---			
	126	15,2	2,0	7,96	234	---			
	138	13,8	2,1	7,24	270	---			
	62	30,8	1,3	16,19	234	---	**SK 10207 - 315LA/6**	1169	170
	71	26,9	1,5	14,05	234	---			
	78	24,5	1,5	12,83	266	---			
	89	21,5	1,8	11,22	249	---			
	98	19,5	1,8	10,25	266	---			
	112	17,1	2,1	8,93	249	---			
	123	15,5	2,2	8,15	285	---			
	35	54,6	1,4	28,56	159	A/Fan*	**SK 11307 - 315LA/6**	1460	170
	38	50,3	1,4	26,09	170	A/Fan*			
	45	42,4	1,5	22,32	178	A/Fan*			
	49	39,0	1,8	20,25	212	---	**SK 11207 - 315LA/6**	1390	170
	54	35,4	1,9	18,50	235	---			
	63	30,3	2,1	15,83	235	---			
	69	27,7	2,2	14,46	248	---			
	79	24,2	2,5	12,71	262	---			
	86	22,2	2,6	11,61	279	---			
	29	65,9	1,5	34,71	211	---	**SK 12307 - 315LA/6**	2110	170
	31	61,6	1,5	31,82	228	---			
	35	54,6	1,9	28,22	204	---			
	39	49,0	1,9	25,87	219	---			
	45	42,4	2,3	22,13	228	---			
	50	38,2	2,6	20,01	272	---	**SK 12207 - 315LA/6**	2005	170
	55	34,7	2,6	18,34	300	---			
	18	106,1	1,3	54,73	237	---	**SK 13307 - 315LA/6**	3040	170
	20	95,5	1,3	50,17	245	---			
	22	86,8	1,6	44,94	245	---			
	24	79,6	1,6	41,20	263	---			
	29	65,9	2,1	34,81	263	---			
	31	61,6	2,0	31,91	273	---			
	35	54,6	2,6	28,28	263	---			
	39	49,0	2,7	25,92	284	---			
	46	41,5	2,9	21,90	296	---			
	11	173,6	1,3	87,37	263	---	**SK 15307 - 315LA/6**	4700	170
	12	159,2	1,3	80,10	263	---	**SK 15307 - 315LA/6**	4700	170
	14	136,4	1,8	69,62	263	---			

** ⇨ 65

200 kW
250 kW

n_1 = 1000 min^{-1}

P_1 kW	n_2 [rpm]	M_2 [kNm]	f_B [-]	iges [-]	$P_{t0.20}$ [kW]	CS [-]		kg	mm
200	16	119,4	1,9	63,82	263	---	**SK 15307 - 315LA/6**	4700	170
	18	106,1	2,2	54,56	263	---			
	20	95,5	2,3	50,02	263	---			
	23	83,0	2,9	43,83	263	---			
	25	76,4	2,9	40,18	263	---			
250	100	23,9	1,4	10,00	219	A/Fan*	**SK 9207 - 315LB/6**	1025	170
	110	21,7	1,4	9,10	234	A/Fan*			
	126	18,9	1,6	7,96	234	A/Fan*			
	138	17,3	1,7	7,24	270	---			
	89	26,8	1,4	11,22	249	---	**SK 10207 - 315LB/6**	1169	170
	98	24,4	1,5	10,25	266	---			
	112	21,3	1,7	8,93	249	---			
	123	19,4	1,7	8,15	285	---			
	49	48,7	1,4	20,25	212	A/Fan	**SK 11207 - 315LB/6**	1390	170
	54	44,2	1,5	18,50	235	A/Fan			
	63	37,9	1,7	15,83	235	A/Fan			
	69	34,6	1,8	14,46	248	A/Fan			
	79	30,2	2,0	12,71	262	---			
	86	27,8	2,1	11,61	279	---			
	101	23,6	2,4	9,91	279	---			
	110	21,7	2,5	9,05	297	---			
	127	18,8	2,9	7,87	319	---			
	139	17,2	2,9	7,19	343	---			
	35	68,2	1,5	28,22	204	A/Fan*	**SK 12307 - 315LB/6**	2110	170
	39	61,2	1,5	25,87	219	A/Fan*			
	45	53,1	1,8	22,13	228	A/Fan*			
	50	47,8	2,1	20,01	272	---	**SK 12207 - 315LB/6**	2005	170
	55	43,4	2,1	18,34	300	---			
	64	37,3	2,6	15,69	317	---			
	69	34,6	2,5	14,39	356	---			
	79	30,2	2,9	12,66	335	---			
	86	27,8	2,9	11,60	356	---			
	22	108,5	1,3	44,94	245	A/Fan	**SK 13307 - 315LB/6**	3040	170
	24	99,5	1,3	41,20	263	---			
	29	82,3	1,7	34,81	263	---			
	31	77,0	1,6	31,91	273	---			
	35	68,2	2,1	28,28	263	---			
	39	61,2	2,1	25,92	284	---			
	46	51,9	2,4	21,90	296	---			
	50	47,8	2,9	20,05	355	---	**SK 13207 - 315LB/6**	2820	170
	54	44,2	2,9	18,38	394	---			
	14	170,5	1,4	69,62	263	---	**SK 15307 - 315LB/6**	4700	170
	16	149,2	1,5	63,82	263	---			
	18	132,6	1,8	54,56	263	---			
	20	119,4	1,8	50,02	263	---			
	23	103,8	2,3	43,83	263	---			
	25	95,5	2,3	40,18	263	---			
	29	82,3	2,8	34,35	263	---			
	32	74,6	2,9	31,49	263	---			

** ⇨ 65

315 kW
400 kW

n_1 = 1000 min^{-1}

P_1 kW	n_2 [rpm]	M_2 [kNm]	f_B [-]	iges [-]	$P_{t0.20}$ [kW]	CS [-]		kg	mm
315	112	26,9	1,3	8,93	249	A/Fan*	**SK 10207 - 355S/6**	1169	170
	123	24,5	1,4	8,15	285	A/Fan*			
	63	47,8	1,4	15,83	235	A	**SK 11207 - 355S/6**	1390	170
	69	43,6	1,4	14,46	248	A/Fan*			
	79	38,1	1,6	12,71	262	A/Fan*			
	86	35,0	1,7	11,61	279	A/Fan*			
	101	29,8	1,9	9,91	279	A/Fan*			
	110	27,3	2,0	9,05	297	A/Fan*			
	127	23,7	2,3	7,87	319	---			
	139	21,6	2,3	7,19	343	---			
	158	19,0	2,6	6,31	319	---			
	173	17,4	2,6	5,77	372	---			
	45	66,9	1,5	22,13	228	B	**SK 12307 - 355S/6**	2110	170
	50	60,2	1,6	20,01	272	A/Fan	**SK 12207 - 355S/6**	2005	170
	55	54,7	1,7	18,34	300	A/Fan			
	64	47,0	2,0	15,69	317	---			
	69	43,6	2,0	14,39	356	---			
	79	38,1	2,3	12,66	335	---			
	86	35,0	2,3	11,60	356	---			
	101	29,8	2,7	9,93	356	---			
	110	27,3	2,8	9,10	407	---			
	29	103,7	1,3	34,81	263	A/Fan*	**SK 13307 - 355S/6**	3040	170
	31	97,0	1,3	31,91	273	A/Fan*			
	35	86,0	1,6	28,28	263	A/Fan*			
	39	77,1	1,7	25,92	284	A/Fan*			
	46	65,4	1,9	21,90	296	A/Fan*			
	50	60,2	2,3	20,05	355	---	**SK 13207 - 355S/6**	2820	170
	54	55,7	2,3	18,38	394	---			
	64	47,0	2,7	15,53	394	---			
	70	43,0	2,8	14,24	418	---			
	18	167,1	1,4	54,56	263	A/Fan*	**SK 15307 - 355S/6**	4700	170
	20	150,4	1,4	50,02	263	A/Fan*			
	23	130,8	1,9	43,83	263	A/Fan*			
	25	120,3	1,9	40,18	263	A/Fan*			
	29	103,7	2,3	34,35	263	A/Fan*			
	32	94,0	2,3	31,49	263	A/Fan*			
	36	83,6	2,9	27,86	263	A/Fan*			
	39	77,1	2,9	25,54	263	A/Fan*			
400	86	44,4	1,3	11,61	279	B	**SK 11207 - 400S/6**	1390	170
	101	37,8	1,5	9,91	279	B			
	110	34,7	1,6	9,05	297	A			
	127	30,1	1,8	7,87	319	A/Fan*			
	139	27,5	1,8	7,19	343	A/Fan*			
	158	24,2	2,0	6,31	319	A/Fan*			
	173	22,1	2,0	5,77	372	A/Fan*			
	64	59,7	1,6	15,69	317	A/Fan*	**SK 12207 - 400S/6**	2005	170
	69	55,4	1,6	14,39	356	A/Fan*			
	79	48,4	1,8	12,66	335	A/Fan*			
	86	44,4	1,8	11,60	356	A/Fan*			
	101	37,8	2,2	9,93	356	A/Fan*			
	110	34,7	2,2	9,10	407	---			
	126	30,3	2,5	7,93	407	---			

** ⇨ 65

400 kW
500 kW

n_1 = 1000 min^{-1}

P_1 kW	n_2 [rpm]	M_2 [kNm]	f_B [-]	iges [-]	$P_{t0.20}$ [kW]	CS [-]		kg	mm
400	138	27,7	2,6	7,27	439	---	**SK 12207 - 400S/6**	2005	170
	162	23,6	3,0	6,16	407	---			
	35	109,1	1,3	28,28	263	B	**SK 13307 - 400S/6**	3040	170
	39	97,9	1,3	25,92	284	B			
	46	83,0	1,5	21,90	296	B			
	50	76,4	1,8	20,05	355	A/Fan	**SK 13207 - 400S/6**	2820	170
	54	70,7	1,8	18,38	394	A/Fan			
	64	59,7	2,2	15,53	394	A/Fan			
	70	54,6	2,2	14,24	418	---			
	81	47,2	2,6	12,40	444	---			
	88	43,4	2,6	11,37	473	---			
	99	38,6	3,0	10,11	473	---			
	108	35,4	3,0	9,26	507	---			
	23	166,1	1,5	43,83	263	B	**SK 15307 - 400S/6**	4700	170
	25	152,8	1,5	40,18	263	B			
	29	131,7	1,8	34,35	263	B			
	32	119,4	1,8	31,49	263	B			
	36	106,1	2,3	27,86	263	B			
	39	97,9	2,3	25,54	263	B			
	46	83,0	2,5	21,84	263	B			
500	127	37,6	1,4	7,87	319	B	**SK 11207 - 400M/6**	1390	170
	139	34,4	1,4	7,19	343	B			
	158	30,2	1,6	6,31	319	B			
	173	27,6	1,6	5,77	372	B			
	79	60,4	1,4	12,66	335	B	**SK 12207 - 400M/6**	2005	170
	86	55,5	1,5	11,60	356	B			
	101	47,3	1,7	9,93	356	B			
	110	43,4	1,7	9,10	407	A/Fan*			
	126	37,9	2,0	7,93	407	A/Fan*			
	138	34,6	2,0	7,27	439	A/Fan*			
	162	29,5	2,4	6,16	407	A/Fan*			
	177	27,0	2,4	5,64	475	A/Fan*			
	50	95,5	1,4	20,05	355	B	**SK 13207 - 400M/6**	2820	170
	54	88,4	1,4	18,38	394	A/Fan*			
	64	74,6	1,7	15,53	394	A/Fan*			
	70	68,2	1,8	14,24	418	A/Fan*			
	81	59,0	2,0	12,40	444	A/Fan*			
	88	54,3	2,0	11,37	473	A/Fan*			
	99	48,2	2,4	10,11	473	A/Fan*			
	108	44,2	2,4	9,26	507	---			
	125	38,2	2,8	7,98	546	---			
	137	34,9	2,8	7,31	592	---			
	29	164,7	1,4	34,35	263	C	**SK 15307 - 400M/6**	4700	170
	32	149,2	1,4	31,49	263	C			
	36	132,6	1,8	27,86	263	C			
	39	122,4	1,8	25,54	263	C			
	46	103,8	2,0	21,84	263	C			
	51	93,6	2,5	19,76	263	B	**SK 15207 - 400M/6**	4460	170
	55	86,8	2,5	18,11	263	B			

** ⇨ 65

560 kW
630 kW

n_1 = 1000 min^{-1}

P_1 kW	n_2 [rpm]	M_2 [kNm]	f_B [-]	iges [-]	$P_{t0.20}$ [kW]	CS [-]		kg	mm
560	158	33,8	1,5	6,31	319	B	**SK 11207 - 400L/6**	1390	170
	173	30,9	1,5	5,77	372	B			
	86	62,2	1,3	11,60	356	B	**SK 12207 - 400L/6**	2005	170
	101	53,0	1,5	9,93	356	B			
	110	48,6	1,6	9,10	407	B			
	126	42,4	1,8	7,93	407	B			
	138	38,8	1,8	7,27	439	B			
	162	33,0	2,1	6,16	407	B			
	177	30,2	2,1	5,64	475	A/Fan*			
	64	83,6	1,5	15,53	394	B	**SK 13207 - 400L/6**	2820	170
	70	76,4	1,6	14,24	418	B			
	81	66,0	1,8	12,40	444	A/Fan*			
	88	60,8	1,8	11,37	473	A/Fan*			
	99	54,0	2,1	10,11	473	A/Fan*			
	108	49,5	2,1	9,26	507	A/Fan*			
	125	42,8	2,5	7,98	546	A/Fan*			
	137	39,0	2,5	7,31	592	---			
	157	34,1	2,9	6,38	546	A/Fan*			
	171	31,3	2,9	5,85	592	---			
	36	148,6	1,6	27,86	263	D	**SK 15307 - 400L/6**	4700	170
	39	137,1	1,6	25,54	263	D			
	46	116,3	1,8	21,84	263	D			
	51	104,9	2,2	19,76	263	C	**SK 15207 - 400L/6**	4460	170
	55	97,2	2,2	18,11	263	C			
	65	82,3	2,8	15,48	263	C			
	70	76,4	2,7	14,19	263	C			
630	101	59,6	1,4	9,93	356	B	**SK 12207 - 450S/6**	2005	170
	110	54,7	1,4	9,10	407	B			
	126	47,8	1,6	7,93	407	B			
	138	43,6	1,6	7,27	439	B			
	162	37,1	1,9	6,16	407	B			
	177	34,0	1,9	5,64	475	B			
	64	94,0	1,4	15,53	394	B	**SK 13207 - 450S/6**	2820	170
	70	86,0	1,4	14,24	418	B			
	81	74,3	1,6	12,40	444	B			
	88	68,4	1,6	11,37	473	B			
	99	60,8	1,9	10,11	473	B			
	108	55,7	1,9	9,26	507	B/Fan*			
	125	48,1	2,2	7,98	546	A/Fan*			
	137	43,9	2,3	7,31	592	A/Fan*			
	157	38,3	2,6	6,38	546	A/Fan*			
	171	35,2	2,6	5,85	592	A/Fan*			
	36	167,1	1,5	27,86	263	E	**SK 15307 - 450S/6**	4700	170
	39	154,3	1,4	25,54	263	E			
	46	130,8	1,6	21,84	263	E			
	51	118,0	2,0	19,76	263	C	**SK 15207 - 450S/6**	4460	170
	55	109,4	2,0	18,11	263	C			
	65	92,6	2,4	15,48	263	C			
	70	86,0	2,4	14,19	263	C			
	80	75,2	2,7	12,48	263	C			
	87	69,2	2,7	11,44	263	C			

** ⇨ 65

710 kW
800 kW

n_1 = 1000 min^{-1}

P_1 kW	n_2 [rpm]	M_2 [kNm]	f_B [-]	iges [-]	$P_{t0.20}$ [kW]	CS [-]		kg	mm
710	126	53,8	1,4	7,93	407	C	**SK 12207 - 450M/6**	2005	170
	138	49,1	1,4	7,27	439	B			
	162	41,9	1,7	6,16	407	C			
	177	38,3	1,7	5,64	475	B			
	81	83,7	1,4	12,40	444	B	**SK 13207 - 450M/6**	2820	170
	88	77,1	1,4	11,37	473	B			
	99	68,5	1,7	10,11	473	B			
	108	62,8	1,7	9,26	507	B			
	125	54,2	2,0	7,98	546	B			
	137	49,5	2,0	7,31	592	A/Fan*			
	157	43,2	2,3	6,38	546	B			
	171	39,7	2,3	5,85	592	A/Fan*			
	46	147,4	1,4	21,84	263	F	**SK 15307 - 450M/6**	4700	170
	51	133,0	1,8	19,76	263	D	**SK 15207 - 450M/6**	4460	170
	55	123,3	1,8	18,11	263	D			
	65	104,3	2,2	15,48	263	D			
	70	96,9	2,1	14,19	263	D			
	80	84,8	2,4	12,48	263	D			
	87	77,9	2,4	11,44	263	D			
	102	66,5	2,9	9,78	263	D			
	112	60,5	2,9	8,96	263	D			
800	162	47,2	1,5	6,16	407	C	**SK 12207 - 450L/6**	2005	170
	177	43,2	1,5	5,64	475	C			
	99	77,2	1,5	10,11	473	C	**SK 13207 - 450L/6**	2820	170
	108	70,7	1,5	9,26	507	C			
	125	61,1	1,8	7,98	546	B			
	137	55,8	1,8	7,31	592	B			
	157	48,7	2,1	6,38	546	B			
	171	44,7	2,1	5,85	592	B			
	51	149,8	1,6	19,76	263	E	**SK 15207 - 450L/6**	4460	170
	55	138,9	1,6	18,11	263	E			
	65	117,5	1,9	15,48	263	E			
	70	109,1	1,9	14,19	263	E			
	80	95,5	2,1	12,48	263	E			
	87	87,8	2,1	11,44	263	E			
	102	74,9	2,6	9,78	263	E			
	112	68,2	2,6	8,96	263	E			

** ⇨ 65

5,5 kW
11 kW

n_1 = 1500 min^{-1}

P_1 kW	n_2 [rpm]	M_2 [kNm]	f_B [-]	iges [-]	$P_{t0.20}$ [kW]	CS [-]		kg	mm
5,5	4,8	11,0	2,3	312,15	48	---	**SK 7307 - 132S/4**	509	170
	5,3	10,1	2,4	283,89	47	---			
	5,9	9,0	2,8	253,44	49	---			
	6,5	8,1	3,0	230,49	50	---			
	4,4	11,7	2,6	343,72	54	---	**SK 8307 - 132S/4**	592	170
	4,6	11,5	2,6	323,50	52	---			
7,5	4,8	14,9	1,7	312,15	48	---	**SK 7307 - 132M/4**	509	170
	5,3	13,4	1,8	283,89	47	---			
	5,9	12,0	2,1	253,44	49	---			
	6,5	11,0	2,2	230,49	50	---			
	7,7	9,5	2,4	195,24	53	---			
	8,4	8,4	2,5	177,56	62	---			
	4,4	16,1	1,9	343,72	54	---	**SK 8307 - 132M/4**	592	170
	4,6	15,8	1,9	323,50	52	---			
	5,4	13,3	2,3	279,07	55	---			
	5,7	12,5	2,4	262,65	55	---			
	7,0	10,1	2,5	214,99	59	---			
	7,4	9,6	2,5	202,34	68	---			
	4,4	16,0	2,5	343,19	68	---	**SK 9307 - 132M/4**	1025	170
	4,8	14,9	2,5	312,23	70	---			
	5,3	13,8	2,5	283,96	69	---			
	5,8	12,2	2,6	258,35	72	---			
	6,9	10,5	2,6	218,38	73	---			
	7,5	9,7	2,6	198,68	76	---			
	3,9	18,5	2,2	385,13	75	---	**SK 10307 - 132M/4**	1169	170
	4,3	16,4	2,3	351,71	80	---			
	4,7	15,0	2,3	318,66	77	---			
	5,2	13,9	2,3	291,01	81	---			
	6,1	11,9	2,3	245,07	81	---			
	6,7	10,9	2,3	223,80	87	---			
11	5,9	18,1	1,4	253,44	49	---	**SK 7307 - 160M/4**	509	170
	6,5	16,1	1,5	230,49	50	---			
	7,7	13,4	1,7	195,24	53	---			
	8,4	12,3	1,7	177,56	62	---			
	9,7	11,0	2,3	154,34	65	---			
	11	9,6	2,5	140,37	65	---			
	12	8,7	2,9	125,31	69	---			
	4,6	23,1	1,3	323,50	52	---	**SK 8307 - 160M/4**	592	170
	5,4	19,1	1,6	279,07	55	---			
	5,7	18,8	1,6	262,65	55	---			
	7,0	14,9	1,7	214,99	59	---			
	7,4	14,1	1,7	202,34	68	---			
	8,8	12,0	2,5	169,95	73	---			
	9,4	11,3	2,5	159,95	73	---			
	4,4	23,5	1,7	343,19	68	---	**SK 9307 - 160M/4**	1025	170
	4,8	21,9	1,7	312,23	70	---			
	5,3	20,2	1,7	283,96	69	---			
	5,8	17,7	1,8	258,35	72	---			
	6,9	15,2	1,8	218,38	73	---			
	7,5	14,0	1,8	198,68	76	---			

** ⇨ 📖 65

11 kW
22 kW

n_1 = 1500 min^{-1}

P_1 kW	n_2 [rpm]	M_2 [kNm]	f_B [-]	iges [-]	$P_{t0.20}$ [kW]	CS [-]		kg	mm
11	3,9	27,2	1,5	385,13	75	---	**SK 10307 - 160M/4**	1169	170
	4,3	25,2	1,5	351,71	80	---			
	4,7	23,1	1,5	318,66	77	---			
	5,2	20,0	1,6	291,01	81	---			
	6,1	17,1	1,6	245,07	81	---			
	6,7	15,6	1,6	223,80	87	---			
15	9,7	14,9	1,7	154,34	65	---	**SK 7307 - 160L/4**	509	170
	11	13,3	1,8	140,37	65	---			
	12	12,0	2,1	125,31	69	---			
	13	11,0	2,2	113,97	67	---			
	15	9,7	2,6	97,38	69	---			
	17	8,5	2,8	88,56	76	---			
	8,8	16,7	1,8	169,95	73	---	**SK 8307 - 160L/4**	592	170
	9,4	14,8	1,9	159,95	73	---			
	11	13,3	2,3	137,98	73	---			
	12	12,1	2,5	129,87	75	---			
	14	10,2	2,9	107,23	75	---			
	15	9,6	2,9	100,92	80	---			
	6,9	21,1	1,3	218,38	73	---	**SK 9307 - 160L/4**	1025	170
	7,5	19,4	1,3	198,68	76	---			
	8,7	16,8	2,4	170,76	90	---			
	9,5	15,3	2,6	157,18	95	---			
	7,7	18,4	2,7	193,87	100	---	**SK 10307 - 160L/4**	1169	170
	8,5	16,9	2,9	177,05	108	---			
18,5	9,7	18,1	1,4	154,34	65	---	**SK 7307 - 180M/4**	509	170
	11	16,0	1,5	140,37	65	---			
	12	14,9	1,7	125,31	69	---			
	13	13,4	1,8	113,97	67	---			
	15	12,0	2,1	97,38	69	---			
	17	10,3	2,3	88,56	76	---			
	19	9,4	2,7	79,07	71	---			
	21	8,3	2,9	71,91	76	---			
	8,8	20,0	1,5	169,95	73	---	**SK 8307 - 180M/4**	592	170
	9,4	18,8	1,5	159,95	73	---			
	11	16,1	1,9	137,98	73	---			
	12	14,4	2,1	129,87	75	---			
	14	12,8	2,3	107,23	75	---			
	15	11,6	2,4	100,92	80	---			
	17	10,5	2,9	87,06	80	---			
	8,7	20,2	2,0	170,76	90	---	**SK 9307 - 180M/4**	1025	170
	9,5	19,0	2,1	157,18	95	---			
	11	16,2	2,5	135,24	95	---			
	12	14,8	2,7	123,04	100	---			
	7,7	22,5	2,2	193,87	100	---	**SK 10307 - 180M/4**	1169	170
	8,5	20,4	2,4	177,05	108	---			
	9,9	17,8	2,8	151,77	108	---			
22	12	18,1	1,4	125,31	69	---	**SK 7307 - 180L/4**	509	170

** ⇨ 65

22 kW
30 kW

n_1 = 1500 min^{-1}

P_1 kW	n_2 [rpm]	M_2 [kNm]	f_B [-]	iges [-]	$P_{t0.20}$ [kW]	CS [-]		kg	mm
22	13	16,1	1,5	113,97	67	---	**SK 7307 - 180L/4**	509	170
	15	14,1	1,8	97,38	69	---			
	17	12,5	1,9	88,56	76	---			
	19	11,0	2,3	79,07	71	---			
	21	10,1	2,4	71,91	76	---			
	25	8,4	3,0	60,91	81	---			
	11	19,1	1,6	137,98	73	---	**SK 8307 - 180L/4**	592	170
	12	17,8	1,7	129,87	75	---			
	14	14,8	2,0	107,23	75	---			
	15	13,9	2,0	100,92	80	---			
	17	12,2	2,5	87,06	80	---			
	18	11,8	2,6	81,94	85	---			
	8,7	23,7	1,7	170,76	90	---	**SK 9307 - 180L/4**	1025	170
	9,5	22,2	1,8	157,18	95	---			
	11	19,2	2,1	135,24	95	---			
	12	17,3	2,3	123,04	100	---			
	13	16,2	2,5	111,90	98	---			
	7,7	27,6	1,8	193,87	100	---	**SK 10307 - 180L/4**	1169	170
	8,5	24,5	2,0	177,05	108	---			
	9,9	21,7	2,3	151,77	108	---			
	11	18,8	2,6	138,60	108	---			
	12	17,2	2,9	125,57	111	---			
30	15	19,5	1,3	97,38	69	---	**SK 7307 - 200L/4**	509	170
	17	16,9	1,4	88,56	76	---			
	19	14,9	1,7	79,07	71	---			
	21	13,4	1,8	71,91	76	---			
	25	11,5	2,2	60,91	81	---			
	27	10,5	2,3	55,39	83	---			
	31	9,3	2,7	49,04	78	---			
	34	8,3	2,8	44,60	81	---			
	14	21,1	1,4	107,23	75	---	**SK 8307 - 200L/4**	592	170
	15	18,5	1,5	100,92	80	---			
	17	16,9	1,8	87,06	80	---			
	18	16,1	1,9	81,94	85	---			
	22	13,3	2,3	67,07	85	---			
	24	11,8	2,6	63,12	91	---			
	28	10,3	2,8	53,99	88	---			
	30	9,4	2,9	50,82	91	---			
	9,5	30,7	1,3	157,18	95	---	**SK 9307 - 200L/4**	1025	170
	11	25,3	1,6	135,24	95	---			
	12	23,5	1,7	123,04	100	---			
	13	22,5	1,8	111,90	98	---			
	16	17,7	2,3	95,98	100	---			
	17	16,6	2,4	87,32	110	---			
	19	15,1	2,7	79,41	103	---			
	21	13,8	2,9	72,25	110	---			
	7,7	38,2	1,3	193,87	100	---	**SK 10307 - 200L/4**	1169	170
	8,5	32,7	1,5	177,05	108	---			
	9,9	29,3	1,7	151,77	108	---			
	11	25,8	1,9	138,60	108	---			
	12	23,8	2,1	125,57	111	---			
	14	20,8	2,4	107,71	111	---			
	15	18,8	2,6	98,36	117	---			

** ⇨ 65

30 kW
45 kW

n_1 = 1500 min^{-1}

P_1 kW	n_2 [rpm]	M_2 [kNm]	f_B [-]	iges [-]	$P_{t0.20}$ [kW]	CS [-]		kg	mm
30	17	16,7	3,0	89,12	117	---	**SK 10307 - 200L/4**	1169	170
37	19	18,1	1,4	79,07	71	---	**SK 7307 - 225S/4**	509	170
	21	17,3	1,4	71,91	76	---			
	25	14,1	1,8	60,91	81	---			
	27	13,4	1,8	55,39	83	---			
	31	11,5	2,2	49,04	78	---			
	34	10,5	2,2	44,60	81	---			
	38	9,4	2,7	39,81	81	---			
	41	8,6	2,8	36,21	86	---			
	17	20,3	1,5	87,06	80	---	**SK 8307 - 225S/4**	592	170
	18	19,1	1,6	81,94	85	---			
	22	16,1	1,9	67,07	85	---			
	24	14,6	2,1	63,12	91	---			
	28	12,6	2,3	53,99	88	---			
	30	11,9	2,3	50,82	91	---			
	34	10,5	2,9	43,84	91	---			
	12	28,5	1,4	123,04	100	---	**SK 9307 - 225S/4**	1025	170
	13	27,0	1,5	111,90	98	---			
	16	22,6	1,8	95,98	100	---			
	17	21,0	1,9	87,32	110	---			
	19	18,5	2,2	79,41	103	---			
	21	16,6	2,4	72,25	110	---			
	25	14,1	2,9	61,07	117	---			
	9,9	35,6	1,4	151,77	108	---	**SK 10307 - 225S/4**	1169	170
	11	32,7	1,5	138,60	108	---			
	12	29,4	1,7	125,57	111	---			
	14	25,0	2,0	107,71	111	---			
	15	23,3	2,1	98,36	117	---			
	17	20,9	2,4	89,12	117	---			
	18	19,6	2,5	81,38	125	---			
	13	26,7	2,8	114,28	114	---	**SK 11307 - 225S/4**	1460	170
	14	25,4	2,7	104,39	117	---			
45	25	16,9	1,5	60,91	81	---	**SK 7307 - 225M/4**	509	170
	27	16,1	1,5	55,39	83	---			
	31	14,0	1,8	49,04	78	---			
	34	12,9	1,8	44,60	81	---			
	38	11,5	2,2	39,81	81	---			
	41	10,5	2,3	36,21	86	---			
	49	8,8	2,5	30,67	90	---			
	54	8,0	2,5	27,89	93	---			
	18	23,5	1,3	81,94	85	---	**SK 8307 - 225M/4**	592	170
	22	19,1	1,6	67,07	85	---			
	24	18,1	1,7	63,12	91	---			
	28	15,2	1,9	53,99	88	---			
	30	14,4	1,9	50,82	91	---			
	34	12,7	2,4	43,84	91	---			
	36	11,9	2,6	41,26	97	---			
	44	9,6	2,8	33,77	97	---			
	47	9,0	2,8	31,79	104	---			
	16	27,1	1,5	95,98	100	---	**SK 9307 - 225M/4**	1025	170

** ⇨ 65

45 kW
55 kW

n_1 = 1500 min^{-1}

P_1 kW	n_2 [rpm]	M_2 [kNm]	f_B [-]	iges [-]	$P_{t0.20}$ [kW]	CS [-]		kg	mm
45	17	24,9	1,6	87,32	110	---	**SK 9307 - 225M/4**	1025	170
	19	22,7	1,8	79,41	103	---			
	21	21,0	1,9	72,25	110	---			
	25	17,1	2,4	61,07	117	---			
	27	16,0	2,5	55,56	121	---			
	31	13,7	3,0	49,13	113	---			
	12	35,6	1,4	125,57	111	---	**SK 10307 - 225M/4**	1169	170
	14	31,3	1,6	107,71	111	---			
	15	28,8	1,7	98,36	117	---			
	17	25,1	2,0	89,12	117	---			
	18	24,5	2,0	81,38	125	---			
	22	19,4	2,6	68,54	125	---			
	24	18,1	2,7	62,59	133	---			
	13	32,5	2,3	114,28	114	---	**SK 11307 - 225M/4**	1460	170
	14	31,2	2,2	104,39	117	---			
	17	25,0	2,6	89,30	121	---			
	18	24,1	2,7	81,58	127	---			
55	31	16,8	1,5	49,04	78	---	**SK 7307 - 250M/4**	509	170
	34	15,5	1,5	44,60	81	---			
	38	14,1	1,8	39,81	81	---			
	41	12,7	1,9	36,21	86	---			
	49	10,5	2,1	30,67	90	---			
	54	9,6	2,1	27,89	93	---			
	59	9,0	2,8	25,34	110	---	**SK 7207 - 250M/4**	509	170
	65	8,0	2,9	23,05	115	---			
	24	21,9	1,4	63,12	91	---	**SK 8307 - 250M/4**	592	170
	28	19,3	1,5	53,99	88	---			
	30	17,1	1,6	50,82	91	---			
	34	15,3	2,0	43,84	91	---			
	36	14,8	2,1	41,26	97	---			
	44	11,7	2,3	33,77	97	---			
	47	11,0	2,3	31,79	104	---			
	17	30,7	1,3	87,32	110	---	**SK 9307 - 250M/4**	1025	170
	19	27,2	1,5	79,41	103	---			
	21	24,9	1,6	72,25	110	---			
	25	20,5	2,0	61,07	117	---			
	27	19,0	2,1	55,56	121	---			
	31	17,2	2,4	49,13	113	---			
	34	15,3	2,6	44,70	117	---			
	37	14,3	2,9	40,65	117	---			
	14	38,5	1,3	107,71	111	---	**SK 10307 - 250M/4**	1169	170
	15	35,0	1,4	98,36	117	---			
	17	31,4	1,6	89,12	117	---			
	18	28,8	1,7	81,38	125	---			
	22	24,0	2,1	68,54	125	---			
	24	22,3	2,2	62,59	133	---			
	27	19,2	2,6	55,14	129	---			
	30	17,5	2,6	50,35	133	---			
	13	39,4	1,9	114,28	114	---	**SK 11307 - 250M/4**	1460	170

** ⇨ 📖 65

55 kW
75 kW

n_1 = 1500 min^{-1}

P_1 kW	n_2 [rpm]	M_2 [kNm]	f_B [-]	iges [-]	$P_{t0.20}$ [kW]	CS [-]		kg	mm
55	14	38,2	1,8	104,39	117	---	**SK 11307 - 250M/4**	1460	170
	17	31,0	2,1	89,30	121	---			
	18	29,5	2,2	81,58	127	---			
	13	40,6	2,5	112,91	146	---	**SK 12307 - 250M/4**	2110	170
	14	37,3	2,5	103,51	154	---			
75	38	19,5	1,3	39,81	81	---	**SK 7307 - 280S/4**	509	170
	41	17,3	1,4	36,21	86	---			
	49	14,7	1,5	30,67	90	---			
	54	13,4	1,5	27,89	93	---			
	59	12,0	2,1	25,34	110	---	**SK 7207 - 280S/4**	509	170
	65	11,1	2,1	23,05	115	---			
	76	9,3	2,6	19,72	121	---			
	84	8,5	2,6	17,94	134	---			
	34	21,8	1,4	43,84	91	---	**SK 8307 - 280S/4**	592	170
	36	19,4	1,6	41,26	97	---			
	44	15,8	1,7	33,77	97	---			
	47	14,9	1,7	31,79	104	---			
	54	13,3	2,3	27,90	118	---	**SK 8207 - 280S/4**	592	170
	57	12,7	2,3	26,26	129	---			
	69	10,5	2,8	21,72	136	---			
	73	9,8	2,8	20,44	151	---			
	25	29,3	1,4	61,07	117	---	**SK 9307 - 280S/4**	1025	170
	27	26,6	1,5	55,56	121	---			
	31	22,9	1,8	49,13	113	---			
	34	21,0	1,9	44,70	117	---			
	37	19,7	2,1	40,65	117	---			
	41	17,3	2,3	36,98	125	---			
	48	14,9	2,8	31,26	130	---			
	53	13,3	3,0	28,44	135	---			
	22	31,6	1,6	68,54	125	---	**SK 10307 - 280S/4**	1169	170
	24	30,6	1,6	62,59	133	---			
	27	26,3	1,9	55,14	129	---			
	30	24,0	1,9	50,35	133	---			
	33	22,2	2,3	45,62	133	---			
	36	19,6	2,5	41,66	142	---			
	13	53,4	1,4	114,28	114	---	**SK 11307 - 280S/4**	1460	170
	14	52,8	1,3	104,39	117	---			
	17	43,3	1,5	89,30	121	---			
	18	40,6	1,6	81,58	127	---			
	21	34,0	2,2	70,40	131	---			
	23	31,2	2,2	64,31	139	---			
	27	26,8	2,7	55,01	135	---			
	30	23,7	2,8	50,25	144	---			
	13	56,3	1,8	112,91	146	---	**SK 12307 - 280S/4**	2110	170
	14	51,8	1,8	103,51	154	---			
	17	42,0	2,3	88,55	154	---			
	18	40,4	2,2	81,18	163	---			
	13	54,5	2,6	113,15	182	---	**SK 13307 - 280S/4**	3040	170

** ⇨ 65

75 kW
90 kW

n_1 = 1500 min^{-1}

P_1 kW	n_2 [rpm]	M_2 [kNm]	f_B [-]	iges [-]	$P_{t0.20}$ [kW]	CS [-]		kg	mm
75	14	52,2	2,5	103,73	192	---	**SK 13307 - 280S/4**	3040	170
90	59	14,9	1,7	25,34	110	---	**SK 7207 - 280M/4**	509	170
	65	12,9	1,8	23,05	115	---			
	76	11,5	2,1	19,72	121	---			
	84	10,0	2,2	17,94	134	---			
	96	9,0	2,5	15,62	134	---			
	106	8,2	2,5	14,20	142	---			
	121	7,1	3,0	12,38	142	---			
	133	6,4	3,0	11,26	161	---			
	36	23,8	1,3	41,26	97	---	**SK 8307 - 280M/4**	592	170
	44	19,2	1,4	33,77	97	---			
	47	18,1	1,4	31,79	104	---			
	54	16,1	1,9	27,90	118	---	**SK 8207 - 280M/4**	592	170
	57	15,4	1,9	26,26	129	---			
	69	12,2	2,4	21,72	136	---			
	73	12,0	2,3	20,44	151	---			
	87	9,9	2,8	17,20	151	---			
	93	9,3	2,8	16,19	160	---			
	31	27,5	1,5	49,13	113	---	**SK 9307 - 280M/4**	1025	170
	34	24,9	1,6	44,70	117	---			
	37	23,0	1,8	40,65	117	---			
	41	21,0	1,9	36,98	125	---			
	48	18,1	2,3	31,26	130	---			
	53	16,0	2,5	28,44	135	---			
	59	14,4	2,9	25,63	160	---	**SK 9207 - 280M/4**	1025	170
	64	13,3	3,0	23,31	167	---			
	24	35,0	1,4	62,59	133	---	**SK 10307 - 280M/4**	1169	170
	27	31,2	1,6	55,14	129	---			
	30	28,5	1,6	50,35	133	---			
	33	25,5	2,0	45,62	133	---			
	36	23,3	2,1	41,66	142	---			
	43	19,7	2,6	35,08	142	---			
	47	18,1	2,7	32,04	153	---			
	52	16,7	2,9	28,76	173	---	**SK 10207 - 280M/4**	1169	170
	57	14,9	3,0	26,26	190	---			
	18	46,4	1,4	81,58	127	---	**SK 11307 - 280M/4**	1460	170
	21	41,6	1,8	70,40	131	---			
	23	38,1	1,8	64,31	139	---			
	27	31,4	2,3	55,01	135	---			
	30	28,8	2,3	50,25	144	---			
	34	25,0	3,0	44,70	154	---			
	37	22,9	3,0	40,83	154	---			
	13	67,6	1,5	112,91	146	---	**SK 12307 - 280M/4**	2110	170
	14	62,2	1,5	103,51	154	---			
	17	50,9	1,9	88,55	154	---			
	18	46,7	1,9	81,18	163	---			
	22	39,0	2,6	69,56	168	---			
	24	35,9	2,6	63,77	184	---			
	13	67,5	2,1	113,15	182	---	**SK 13307 - 280M/4**	3040	170

** ⇨ 📖 65

90 kW
110 kW

n_1 = 1500 min^{-1}

P_1 kW	n_2 [rpm]	M_2 [kNm]	f_B [-]	iges [-]	$P_{t0.20}$ [kW]	CS [-]		kg	mm
90	14	62,1	2,1	103,73	192	---	**SK 13307 - 280M/4**	3040	170
	17	51,2	2,6	87,64	209	---			
	19	45,2	2,7	80,34	215	---			
110	59	18,1	1,4	25,34	110	---	**SK 7207 - 315S/4**	509	170
	65	16,6	1,4	23,05	115	---			
	76	13,4	1,8	19,72	121	---			
	84	12,2	1,8	17,94	134	---			
	96	10,8	2,1	15,62	134	---			
	106	9,8	2,1	14,20	142	---			
	121	8,8	2,4	12,38	142	---			
	133	8,0	2,4	11,26	161	---			
	152	7,0	2,8	9,89	151	---			
	167	6,4	2,8	8,99	161	---			
	54	19,1	1,6	27,90	118	---	**SK 8207 - 315S/4**	592	170
	57	18,3	1,6	26,26	129	---			
	69	15,4	1,9	21,72	136	---			
	73	14,5	1,9	20,44	151	---			
	87	12,0	2,3	17,20	151	---			
	93	11,3	2,3	16,19	160	---			
	110	9,6	2,7	13,63	160	---			
	117	9,0	2,7	12,83	181	---			
	37	27,6	1,5	40,65	117	---	**SK 9307 - 315S/4**	1025	170
	41	24,9	1,6	36,98	125	---			
	48	21,9	1,9	31,26	130	---			
	53	20,0	2,0	28,44	135	---			
	59	17,5	2,4	25,63	160	---	**SK 9207 - 315S/4**	1025	170
	64	16,6	2,4	23,31	167	---			
	75	14,2	2,8	19,94	176	---			
	83	12,9	2,9	18,14	195	---			
	33	31,9	1,6	45,62	133	---	**SK 10307 - 315S/4**	1169	170
	36	28,8	1,7	41,66	142	---			
	43	24,4	2,1	35,08	142	---			
	47	22,3	2,2	32,04	153	---			
	52	20,2	2,4	28,76	173	---	**SK 10207 - 315S/4**	1169	170
	57	18,7	2,4	26,26	190	---			
	67	15,8	2,9	22,38	199	---			
	21	49,9	1,5	70,40	131	---	**SK 11307 - 315S/4**	1460	170
	23	45,7	1,5	64,31	139	---			
	27	38,1	1,9	55,01	135	---			
	30	34,9	1,9	50,25	144	---			
	34	31,2	2,4	44,70	154	---			
	37	28,6	2,4	40,83	154	---			
	43	24,1	3,0	34,93	154	---			
	47	22,1	3,0	31,90	165	---			
	17	60,4	1,6	88,55	154	---	**SK 12307 - 315S/4**	2110	170
	18	59,2	1,5	81,18	163	---			
	22	48,3	2,1	69,56	168	---			
	24	44,4	2,1	63,77	184	---			
	27	39,3	2,5	54,55	184	---			
	30	34,8	2,6	50,01	204	---			

** ⇨ 65

110 kW
132 kW

n_1 = 1500 min^{-1}

P_1 kW	n_2 [rpm]	M_2 [kNm]	f_B [-]	iges [-]	$P_{t0.20}$ [kW]	CS [-]		kg	mm
110	13	78,8	1,8	113,15	182	---	**SK 13307 - 315S/4**	3040	170
	14	76,7	1,7	103,73	192	---			
	17	60,5	2,2	87,64	209	---			
	19	55,5	2,2	80,34	215	---			
	21	50,6	2,8	70,66	215	---			
	23	45,0	2,9	64,78	229	---			
132	76	16,1	1,5	19,72	121	A/Fan*	**SK 7207 - 315M/4**	509	170
	84	14,7	1,5	17,94	134	---			
	96	13,3	1,7	15,62	134	---			
	106	12,1	1,7	14,20	142	---			
	121	10,6	2,0	12,38	142	---			
	133	9,7	2,0	11,26	161	---			
	152	8,2	2,4	9,89	151	---			
	167	7,4	2,4	8,99	161	---			
	191	6,5	2,7	7,87	161	---			
	209	5,9	2,7	7,16	186	---			
	54	23,5	1,3	27,90	118	A/Fan*	**SK 8207 - 315M/4**	592	170
	57	22,5	1,3	26,26	129	A/Fan*			
	69	18,3	1,6	21,72	136	---			
	73	17,2	1,6	20,44	151	---			
	87	14,5	1,9	17,20	151	---			
	93	13,6	1,9	16,19	160	---			
	110	11,3	2,3	13,63	160	---			
	117	10,6	2,3	12,83	181	---			
	138	9,1	2,7	10,89	170	---			
	146	8,5	2,7	10,25	181	---			
	48	26,0	1,6	31,26	130	A/Fan*	**SK 9307 - 315M/4**	1025	170
	53	23,5	1,7	28,44	135	---			
	59	21,0	2,0	25,63	160	---	**SK 9207 - 315M/4**	1025	170
	64	20,0	2,0	23,31	167	---			
	75	16,6	2,4	19,94	176	---			
	83	14,9	2,5	18,14	195	---			
	95	13,3	2,8	15,79	195	---			
	104	12,1	2,9	14,37	207	---			
	33	39,2	1,3	45,62	133	---	**SK 10307 - 315M/4**	1169	170
	36	35,0	1,4	41,66	142	---			
	43	30,2	1,7	35,08	142	---			
	47	27,2	1,8	32,04	153	---			
	52	24,3	2,0	28,76	173	---	**SK 10207 - 315M/4**	1169	170
	57	22,4	2,0	26,26	190	---			
	67	19,0	2,4	22,38	199	---			
	73	17,2	2,5	20,44	221	---			
	85	14,8	2,9	17,72	221	---			
	93	13,5	3,0	16,19	234	---			
	27	48,2	1,5	55,01	135	---	**SK 11307 - 315M/4**	1460	170
	30	41,4	1,6	50,25	144	---			
	34	37,5	2,0	44,70	154	---			
	37	34,3	2,0	40,83	154	---			
	43	29,0	2,5	34,93	154	---			
	47	26,5	2,5	31,90	165	---			
	18	68,3	1,3	81,18	163	---	**SK 12307 - 315M/4**	2110	170

** ⇨ 65

132 kW
160 kW

n_1 = 1500 min^{-1}

P_1 kW	n_2 [rpm]	M_2 [kNm]	f_B [-]	iges [-]	$P_{t0.20}$ [kW]	CS [-]		kg	mm
132	22	56,3	1,8	69,56	168	---	**SK 12307 - 315M/4**	2110	170
	24	51,8	1,8	63,77	184	---			
	27	46,8	2,1	54,55	184	---			
	30	41,1	2,2	50,01	204	---			
	34	37,5	2,7	44,26	197	---			
	37	34,6	2,7	40,58	211	---			
	13	94,5	1,5	113,15	182	---	**SK 13307 - 315M/4**	3040	170
	14	93,1	1,4	103,73	192	---			
	17	73,9	1,8	87,64	209	---			
	19	67,8	1,8	80,34	215	---			
	21	59,0	2,4	70,66	215	---			
	23	54,3	2,4	64,78	229	---			
	27	47,3	2,9	54,73	237	---			
	30	42,1	3,0	50,17	245	---			
	68	18,5	6,6	21,90	296	---			
	75	16,8	8,2	20,05	355	---	**SK 13207 - 315M/4**	2820	170
	235	5,4	18,6	6,38	546	---			
	13	96,9	2,5	111,48	263	---	**SK 15307 - 315M/4**	4700	170
	15	82,6	2,7	102,20	286	---			
160	96	16,1	1,4	15,62	134	A/Fan*	**SK 7207 - 315MA/4**	509	170
	106	14,6	1,4	14,20	142	A/Fan*			
	121	12,5	1,7	12,38	142	A/Fan*			
	133	11,4	1,7	11,26	161	---			
	152	10,3	1,9	9,89	151	A/Fan*			
	167	9,4	1,9	8,99	161	---			
	191	8,0	2,2	7,87	161	---			
	209	7,3	2,2	7,16	186	---			
	69	22,5	1,3	21,72	136	A/Fan*	**SK 8207 - 315MA/4**	592	170
	73	21,2	1,3	20,44	151	A/Fan*			
	87	17,3	1,6	17,20	151	A/Fan*			
	93	16,2	1,6	16,19	160	---			
	110	13,6	1,9	13,63	160	---			
	117	12,8	1,9	12,83	181	---			
	138	11,1	2,2	10,89	170	---			
	146	10,5	2,2	10,25	181	---			
	173	9,0	2,5	8,66	170	---			
	184	8,4	2,5	8,15	194	---			
	48	32,0	1,3	31,26	130	A/Fan*	**SK 9307 - 315MA/4**	1025	170
	53	28,5	1,4	28,44	135	A/Fan*			
	59	26,2	1,6	25,63	160	---	**SK 9207 - 315MA/4**	1025	170
	64	23,5	1,7	23,31	167	---			
	75	19,9	2,0	19,94	176	---			
	83	18,7	2,0	18,14	195	---			
	95	16,2	2,3	15,79	195	---			
	104	14,6	2,4	14,37	207	---			
	120	12,9	2,7	12,52	207	---			
	132	11,7	2,8	11,39	234	---			
	43	36,6	1,4	35,08	142	A/Fan*	**SK 10307 - 315MA/4**	1169	170
	47	32,7	1,5	32,04	153	A/Fan*			

** ⇨ 65

160 kW
200 kW

n_1 = 1500 min^{-1}

P_1 kW	n_2 [rpm]	M_2 [kNm]	f_B [-]	iges [-]	$P_{t0.20}$ [kW]	CS [-]		kg	mm
160	52	28,5	1,7	28,76	173	---	**SK 10207 - 315MA/4**	1169	170
	57	26,4	1,7	26,26	190	---			
	67	22,9	2,0	22,38	199	---			
	73	20,5	2,1	20,44	221	---			
	85	17,8	2,4	17,72	221	---			
	93	16,2	2,5	16,19	234	---			
	107	14,3	2,8	14,05	234	---			
	117	13,0	2,9	12,83	266	---			
	34	44,1	1,7	44,70	154	A/Fan*	**SK 11307 - 315MA/4**	1460	170
	37	40,4	1,7	40,83	154	A/Fan*			
	43	36,2	2,0	34,93	154	A/Fan*			
	47	33,2	2,0	31,90	165	---			
	53	28,8	2,6	28,56	159	---			
	57	26,4	2,6	26,09	170	---			
	67	23,0	2,8	22,32	178	---			
	22	67,6	1,5	69,56	168	---	**SK 12307 - 315MA/4**	2110	170
	24	62,2	1,5	63,77	184	---			
	27	57,8	1,7	54,55	184	---			
	30	50,2	1,8	50,01	204	---			
	34	44,0	2,3	44,26	197	---			
	37	40,6	2,3	40,58	211	---			
	43	35,1	2,8	34,71	211	---			
	47	32,3	2,8	31,82	228	---			
	17	88,7	1,5	87,64	209	---	**SK 13307 - 315MA/4**	3040	170
	19	81,3	1,5	80,34	215	---			
	21	74,6	1,9	70,66	215	---			
	23	65,2	2,0	64,78	229	---			
	27	57,2	2,4	54,73	237	---			
	30	50,5	2,5	50,17	245	---			
	13	115,4	2,1	111,48	263	---	**SK 15307 - 315MA/4**	4700	170
	15	101,4	2,2	102,20	286	---			
	17	91,4	2,5	87,37	278	---			
	19	80,6	2,6	80,10	295	---			
200	121	16,3	1,3	12,38	142	A/Fan*	**SK 7207 - 315L/4**	509	170
	133	14,8	1,3	11,26	161	A/Fan*			
	152	12,3	1,6	9,89	151	A/Fan*			
	167	11,1	1,6	8,99	161	A/Fan*			
	191	9,8	1,8	7,87	161	A/Fan*			
	209	8,9	1,8	7,16	186	A/Fan*			
	110	17,3	1,5	13,63	160	A/Fan*	**SK 8207 - 315L/4**	592	170
	117	16,3	1,5	12,83	181	A/Fan*			
	138	13,6	1,8	10,89	170	A/Fan*			
	146	12,8	1,8	10,25	181	A/Fan*			
	173	11,2	2,0	8,66	170	A/Fan*			
	184	10,6	2,0	8,15	194	A/Fan*			
	64	30,7	1,3	23,31	167	A/Fan*	**SK 9207 - 315L/4**	1025	170
	75	24,9	1,6	19,94	176	A/Fan*			
	83	23,3	1,6	18,14	195	A/Fan*			
	95	19,6	1,9	15,79	195	A/Fan*			
	104	18,4	1,9	14,37	207	---			
	120	15,9	2,2	12,52	207	---			
	132	14,3	2,3	11,39	234	---			
	150	12,7	2,6	10,00	219	---			

** ⇨ 📖 65

200 kW
250 kW

n_1 = 1500 min^{-1}

P_1 kW	n_2 [rpm]	M_2 [kNm]	f_B [-]	iges [-]	$P_{t0.20}$ [kW]	CS [-]		kg	mm
200	165	11,4	2,7	9,10	234	---	**SK 9207 - 315L/4**	1025	170
	52	37,3	1,3	28,76	173	A/Fan*	**SK 10207 - 315L/4**	1169	170
	57	34,5	1,3	26,26	190	A/Fan*			
	67	28,6	1,6	22,38	199	---			
	73	26,9	1,6	20,44	221	---			
	85	22,5	1,9	17,72	221	---			
	93	20,2	2,0	16,19	234	---			
	107	18,2	2,2	14,05	234	---			
	117	16,4	2,3	12,83	266	---			
	134	14,0	2,7	11,22	249	---			
	146	13,2	2,7	10,25	266	---			
	34	57,6	1,3	44,70	154	A/Fan*	**SK 11307 - 315L/4**	1460	170
	37	52,8	1,3	40,83	154	A/Fan*			
	43	45,3	1,6	34,93	154	A/Fan*			
	47	41,4	1,6	31,90	165	A/Fan*			
	53	35,7	2,1	28,56	159	A/Fan*			
	57	34,3	2,0	26,09	170	A/Fan*			
	67	28,0	2,3	22,32	178	A/Fan*			
	74	25,8	2,7	20,25	212	---	**SK 11207 - 315L/4**	1390	170
	81	23,5	2,8	18,50	235	---			
	27	70,2	1,4	54,55	184	A/Fan	**SK 12307 - 315L/4**	2110	170
	30	64,6	1,4	50,01	204	---			
	34	56,3	1,8	44,26	197	A/Fan			
	37	51,8	1,8	40,58	211	---			
	43	44,7	2,2	34,71	211	---			
	47	41,1	2,2	31,82	228	---			
	53	36,2	2,8	28,22	204	---			
	58	33,3	2,8	25,87	219	---			
	21	88,6	1,6	70,66	215	---	**SK 13307 - 315L/4**	3040	170
	23	81,5	1,6	64,78	229	---			
	27	72,2	1,9	54,73	237	---			
	30	63,1	2,0	50,17	245	---			
	33	59,0	2,4	44,94	245	---			
	36	54,0	2,4	41,20	263	---			
	13	151,4	1,6	111,48	263	---	**SK 15307 - 315L/4**	4700	170
	15	123,9	1,8	102,20	286	---			
	17	114,3	2,0	87,37	278	---			
	19	99,8	2,1	80,10	295	---			
	22	86,6	2,8	69,62	304	---			
	24	79,6	2,8	63,82	325	---			
250	191	12,6	1,4	7,87	161	A/Fan*	**SK 7207 - 315LA/4**	509	170
	209	11,4	1,4	7,16	186	A/Fan*			
	138	17,5	1,4	10,89	170	A/Fan*	**SK 8207 - 315LA/4**	592	170
	146	16,4	1,4	10,25	181	A/Fan*			
	173	14,0	1,6	8,66	170	A/Fan*			
	184	13,2	1,6	8,15	194	A/Fan*			
	95	24,9	1,5	15,79	195	A/Fan*	**SK 9207 - 315LA/4**	1025	170
	104	23,3	1,5	14,37	207	A/Fan*			
	120	19,4	1,8	12,52	207	A/Fan*			
	132	18,2	1,8	11,39	234	A/Fan*			
	150	15,7	2,1	10,00	219	A/Fan*			

** ⇨ 65

250 kW
315 kW

n_1 = 1500 min^{-1}

P_1 kW	n_2 [rpm]	M_2 [kNm]	f_B [-]	iges [-]	$P_{t0.20}$ [kW]	CS [-]		kg	mm
250	165	14,7	2,1	9,10	234	A/Fan*	**SK 9207 - 315LA/4**	1025	170
	188	12,9	2,4	7,96	234	A/Fan*			
	207	11,6	2,5	7,24	270	---			
	73	33,1	1,3	20,44	221	A/Fan*	**SK 10207 - 315LA/4**	1169	170
	85	28,5	1,5	17,72	221	A/Fan*			
	93	25,3	1,6	16,19	234	A/Fan*			
	107	22,3	1,8	14,05	234	A/Fan*			
	117	19,9	1,9	12,83	266	---			
	134	18,0	2,1	11,22	249	---			
	146	16,2	2,2	10,25	266	---			
	168	14,2	2,5	8,93	249	---			
	184	12,9	2,6	8,15	285	---			
	43	55,7	1,3	34,93	154	B/Fan*	**SK 11307 - 315LA/4**	1460	170
	47	51,0	1,3	31,90	165	B/Fan*			
	53	44,1	1,7	28,56	159	B/Fan*			
	57	42,9	1,6	26,09	170	B/Fan*			
	67	35,8	1,8	22,32	178	A/Fan*			
	74	31,6	2,2	20,25	212	A/Fan	**SK 11207 - 315LA/4**	1390	170
	81	29,9	2,2	18,50	235	A/Fan			
	95	25,0	2,6	15,83	235	A/Fan			
	104	22,8	2,7	14,46	248	A/Fan			
	34	72,4	1,4	44,26	197	A/Fan*	**SK 12307 - 315LA/4**	2110	170
	37	66,6	1,4	40,58	211	A/Fan*			
	43	54,6	1,8	34,71	211	A/Fan*			
	47	50,2	1,8	31,82	228	A/Fan*			
	53	46,0	2,2	28,22	204	A/Fan*			
	58	40,6	2,3	25,87	219	A/Fan*			
	68	34,9	2,8	22,13	228	A/Fan*			
	27	85,8	1,6	54,73	237	A/Fan	**SK 13307 - 315LA/4**	3040	170
	30	78,9	1,6	50,17	245	A/Fan			
	33	70,8	2,0	44,94	245	A/Fan			
	36	64,8	2,0	41,20	263	---			
	43	54,9	2,5	34,81	263	---			
	47	50,5	2,5	31,91	273	---			
	13	186,4	1,3	111,48	263	---	**SK 15307 - 315LA/4**	4700	170
	15	159,3	1,4	102,20	286	---			
	17	142,8	1,6	87,37	278	---			
	19	123,2	1,7	80,10	295	---			
	22	110,2	2,2	69,62	304	---			
	24	101,4	2,2	63,82	325	---			
	27	89,8	2,6	54,56	336	---			
	30	79,6	2,7	50,02	361	---			
315	120	24,9	1,4	12,52	207	A/Fan*	**SK 9207 - 315LB/4**	1025	170
	132	23,4	1,4	11,39	234	A/Fan*			
	150	20,6	1,6	10,00	219	A/Fan*			
	165	18,2	1,7	9,10	234	A/Fan*			
	188	16,3	1,9	7,96	234	A/Fan*			
	207	14,6	2,0	7,24	270	A/Fan*			
	107	28,6	1,4	14,05	234	A/Fan*	**SK 10207 - 315LB/4**	1169	170

** ⇨ 65

315 kW
355 kW

n_1 = 1500 min^{-1}

P_1 kW	n_2 [rpm]	M_2 [kNm]	f_B [-]	iges [-]	$P_{t0.20}$ [kW]	CS [-]		kg	mm
315	117	25,2	1,5	12,83	266	A/Fan*	**SK 10207 - 315LB/4**	1169	170
	134	22,2	1,7	11,22	249	A/Fan*			
	146	20,9	1,7	10,25	266	A/Fan*			
	168	17,8	2,0	8,93	249	A/Fan*			
	184	16,0	2,1	8,15	285	A/Fan*			
	53	57,6	1,3	28,56	159	B/Fan*	**SK 11307 - 315LB/4**	1460	170
	57	52,8	1,3	26,09	170	B/Fan*			
	67	46,1	1,4	22,32	178	B/Fan*			
	74	40,9	1,7	20,25	212	A/Fan*	**SK 11207 - 315LB/4**	1390	170
	81	36,6	1,8	18,50	235	A/Fan*			
	95	31,0	2,1	15,83	235	A/Fan*			
	104	29,3	2,1	14,46	248	A/Fan*			
	118	25,6	2,4	12,71	262	A/Fan*			
	129	23,2	2,5	11,61	279	A/Fan*			
	151	19,9	2,9	9,91	279	A/Fan*			
	166	18,1	3,0	9,05	297	A/Fan*			
	43	70,2	1,4	34,71	211	B/Fan*	**SK 12307 - 315LB/4**	2110	170
	47	64,6	1,4	31,82	228	B/Fan*			
	53	56,3	1,8	28,22	204	B/Fan*			
	58	51,8	1,8	25,87	219	B/Fan*			
	68	44,4	2,2	22,13	228	B/Fan*			
	75	40,9	2,4	20,01	272	A/Fan	**SK 12207 - 315LB/4**	2005	170
	82	36,2	2,5	18,34	300	A/Fan			
	33	88,4	1,6	44,94	245	A/Fan*	**SK 13307 - 315LB/4**	3040	170
	36	81,0	1,6	41,20	263	A/Fan*			
	43	68,6	2,0	34,81	263	A/Fan*			
	47	63,1	2,0	31,91	273	A/Fan*			
	53	56,7	2,5	28,28	263	A/Fan*			
	58	52,2	2,5	25,92	284	A/Fan*			
	68	43,6	2,8	21,90	296	A/Fan*			
	17	175,8	1,3	87,37	278	A/Fan*	**SK 15307 - 315LB/4**	4700	170
	19	161,2	1,3	80,10	295	A/Fan*			
	22	134,7	1,8	69,62	304	A/Fan*			
	24	123,9	1,8	63,82	325	---			
	27	111,2	2,1	54,56	336	---			
	30	102,3	2,1	50,02	361	---			
	34	89,7	2,7	43,83	348	---			
	37	82,6	2,7	40,18	375	---			
355	150	21,9	1,5	10,00	219	B/Fan*	**SK 9207 - 355S/4**	1025	170
	165	20,6	1,5	9,10	234	B/Fan*			
	188	18,2	1,7	7,96	234	B/Fan*			
	207	16,2	1,8	7,24	270	A/Fan*			
	117	29,1	1,3	12,83	266	A/Fan*	**SK 10207 - 355S/4**	1169	170
	134	25,2	1,5	11,22	249	A/Fan*			
	146	23,7	1,5	10,25	266	A/Fan*			
	168	19,8	1,8	8,93	249	A/Fan*			
	184	18,7	1,8	8,15	285	A/Fan*			
	74	46,4	1,5	20,25	212	B/Fan*	**SK 11207 - 355S/4**	1390	170

** ⇨ 65

355 kW
400 kW

n_1 = 1500 min^{-1}

P_1 kW	n_2 [rpm]	M_2 [kNm]	f_B [-]	iges [-]	$P_{t0.20}$ [kW]	CS [-]		kg	mm
355	81	41,1	1,6	18,50	235	B/Fan*	**SK 11207 - 355S/4**	1390	170
	95	36,2	1,8	15,83	235	B/Fan*			
	104	32,4	1,9	14,46	248	A/Fan*			
	118	29,2	2,1	12,71	262	A/Fan*			
	129	26,4	2,2	11,61	279	A/Fan*			
	151	22,2	2,6	9,91	279	A/Fan*			
	166	20,1	2,7	9,05	297	A/Fan*			
	53	63,3	1,6	28,22	204	B/Fan*	**SK 12307 - 355S/4**	2110	170
	58	58,3	1,6	25,87	219	B/Fan*			
	68	48,8	2,0	22,13	228	B/Fan*			
	75	44,6	2,2	20,01	272	A/Fan*	**SK 12207 - 355S/4**	2005	170
	82	41,1	2,2	18,34	300	A/Fan*			
	96	35,3	2,7	15,69	317	A/Fan*			
	104	32,4	2,7	14,39	356	---			
	33	101,1	1,4	44,94	245	B/Fan*	**SK 13307 - 355S/4**	3040	170
	36	92,6	1,4	41,20	263	B/Fan*			
	43	80,7	1,7	34,81	263	B/Fan*			
	47	74,2	1,7	31,91	273	B/Fan*			
	53	64,5	2,2	28,28	263	B/Fan*			
	58	59,3	2,2	25,92	284	A/Fan*			
	68	50,8	2,4	21,90	296	A/Fan*			
	22	151,6	1,6	69,62	304	A/Fan*	**SK 15307 - 355S/4**	4700	170
	24	139,4	1,6	63,82	325	A/Fan*			
	27	122,9	1,9	54,56	336	A/Fan*			
	30	113,1	1,9	50,02	361	---			
	34	101,0	2,4	43,83	348	A/Fan*			
	37	92,9	2,4	40,18	375	---			
400	165	23,8	1,3	9,10	234	B/Fan*	**SK 9207 - 355M/4**	1025	170
	188	20,7	1,5	7,96	234	B/Fan*			
	207	18,2	1,6	7,24	270	B/Fan*			
	134	29,1	1,3	11,22	249	B/Fan*	**SK 10207 - 355M/4**	1169	170
	146	25,4	1,4	10,25	266	B/Fan*			
	168	22,3	1,6	8,93	249	B/Fan*			
	184	21,0	1,6	8,15	285	A/Fan*			
	74	53,5	1,3	20,25	212	B/Fan*	**SK 11207 - 355M/4**	1390	170
	81	47,0	1,4	18,50	235	B/Fan*			
	95	40,7	1,6	15,83	235	B/Fan*			
	104	36,2	1,7	14,46	248	B/Fan*			
	118	32,3	1,9	12,71	262	B/Fan*			
	129	29,1	2,0	11,61	279	B/Fan*			
	151	25,1	2,3	9,91	279	B/Fan*			
	166	22,6	2,4	9,05	297	A/Fan*			
	191	20,1	2,7	7,87	319	A/Fan*			
	209	18,4	2,7	7,19	343	A/Fan*			
	53	72,4	1,4	28,22	204	C/Fan*	**SK 12307 - 355M/4**	2110	170
	58	66,6	1,4	25,87	219	C/Fan*			
	68	57,4	1,7	22,13	228	B/Fan*			
	75	51,7	1,9	20,01	272	B/Fan*	**SK 12207 - 355M/4**	2005	170
	82	47,6	1,9	18,34	300	A/Fan*			
	96	39,7	2,4	15,69	317	A/Fan*			
	104	36,5	2,4	14,39	356	A/Fan*			

** ⇨ 65

400 kW
500 kW

n_1 = 1500 min^{-1}

P_1 kW	n_2 [rpm]	M_2 [kNm]	f_B [-]	iges [-]	$P_{t0.20}$ [kW]	CS [-]		kg	mm
400	118	32,0	2,7	12,66	335	A/Fan*	**SK 12207 - 355M/4**	2005	170
	129	30,0	2,7	11,60	356	A/Fan*			
	43	91,5	1,5	34,81	263	B/Fan*	**SK 13307 - 355M/4**	3040	170
	47	78,9	1,6	31,91	273	B/Fan*			
	53	70,9	2,0	28,28	263	B/Fan*			
	58	65,2	2,0	25,92	284	B/Fan*			
	68	55,5	2,2	21,90	296	B/Fan*			
	75	50,9	2,7	20,05	355	A/Fan	**SK 13207 - 355M/4**	2820	170
	82	46,8	2,7	18,38	394	A/Fan			
	22	173,2	1,4	69,62	304	B/Fan*	**SK 15307 - 355M/4**	4700	170
	24	159,3	1,4	63,82	325	B/Fan*			
	27	137,4	1,7	54,56	336	A/Fan*			
	30	126,4	1,7	50,02	361	A/Fan*			
	34	110,1	2,2	43,83	348	A/Fan*			
	37	101,4	2,2	40,18	375	A/Fan*			
	44	86,5	2,7	34,35	390	A/Fan*			
	48	79,6	2,7	31,49	423	---			
500	104	47,3	1,3	14,46	248	B	**SK 11207 - 355L/4**	1390	170
	118	40,9	1,5	12,71	262	B/Fan*			
	129	36,3	1,6	11,61	279	B/Fan*			
	151	32,1	1,8	9,91	279	B/Fan*			
	166	28,6	1,9	9,05	297	B/Fan*			
	191	24,7	2,2	7,87	319	B/Fan*			
	209	22,5	2,2	7,19	343	B/Fan*			
	238	19,7	2,5	6,31	319	B/Fan*			
	260	18,0	2,5	5,77	372	B/Fan*			
	68	69,7	1,4	22,13	228	D	**SK 12307 - 355L/4**	2110	170
	75	65,5	1,5	20,01	272	B/Fan*	**SK 12207 - 355L/4**	2005	170
	82	56,5	1,6	18,34	300	B/Fan*			
	96	50,1	1,9	15,69	317	B/Fan*			
	104	46,1	1,9	14,39	356	B/Fan*			
	118	41,2	2,1	12,66	335	B/Fan*			
	129	36,8	2,2	11,60	356	B/Fan*			
	151	31,5	2,6	9,93	356	B/Fan*			
	165	29,0	2,6	9,10	407	A/Fan*			
	53	88,6	1,6	28,28	263	C/Fan*	**SK 13307 - 355L/4**	3040	170
	58	81,5	1,6	25,92	284	C/Fan*			
	68	71,8	1,7	21,90	296	C/Fan*			
	75	62,5	2,2	20,05	355	B/Fan*	**SK 13207 - 355L/4**	2820	170
	82	57,5	2,2	18,38	394	A/Fan*			
	97	49,7	2,6	15,53	394	A/Fan*			
	105	45,3	2,7	14,24	418	A/Fan*			
	27	179,6	1,3	54,56	336	B/Fan*	**SK 15307 - 355L/4**	4700	170
	30	153,5	1,4	50,02	361	B/Fan*			
	34	142,5	1,7	43,83	348	B/Fan*			
	37	131,2	1,7	40,18	375	B/Fan*			
	44	106,2	2,2	34,35	390	B/Fan*			
	48	97,6	2,2	31,49	423	B/Fan*			
	54	89,8	2,7	27,86	390	B/Fan*			
	59	79,6	2,8	25,54	423	B/Fan*			
	69	68,1	3,0	21,84	464	A/Fan*			

** ⇨ 65

560 kW
630 kW

n_1 = 1500 min^{-1}

P_1 kW	n_2 [rpm]	M_2 [kNm]	f_B [-]	iges [-]	$P_{t0.20}$ [kW]	CS [-]		kg	mm
560	118	43,9	1,4	12,71	262	C	**SK 11207 - 400S/4**	1390	170
	129	41,5	1,4	11,61	279	C			
	151	36,1	1,6	9,91	279	C			
	166	31,9	1,7	9,05	297	B/Fan*			
	191	28,6	1,9	7,87	319	B/Fan*			
	209	26,1	1,9	7,19	343	B/Fan*			
	238	22,4	2,2	6,31	319	B/Fan*			
	260	20,5	2,2	5,77	372	B/Fan*			
	75	70,1	1,4	20,01	272	C	**SK 12207 - 400S/4**	2005	170
	82	64,6	1,4	18,34	300	B/Fan*			
	96	56,0	1,7	15,69	317	B/Fan*			
	104	51,5	1,7	14,39	356	B/Fan*			
	118	45,5	1,9	12,66	335	B/Fan*			
	129	40,5	2,0	11,60	356	B/Fan*			
	151	35,6	2,3	9,93	356	B/Fan*			
	165	32,8	2,3	9,10	407	B/Fan*			
	189	28,5	2,7	7,93	407	B/Fan*			
	206	26,2	2,7	7,27	439	B/Fan*			
	53	101,3	1,4	28,28	263	D	**SK 13307 - 400S/4**	3040	170
	58	93,1	1,4	25,92	284	D/Fan*			
	68	76,3	1,6	21,90	296	D/Fan*			
	75	72,3	1,9	20,05	355	B/Fan*	**SK 13207 - 400S/4**	2820	170
	82	66,5	1,9	18,38	394	B/Fan*			
	97	56,1	2,3	15,53	394	B/Fan*			
	105	51,0	2,4	14,24	418	B/Fan*			
	121	44,7	2,7	12,40	444	A/Fan*			
	132	41,1	2,7	11,37	473	A/Fan*			
	34	161,5	1,5	43,83	348	C/Fan*	**SK 15307 - 400S/4**	4700	170
	37	148,7	1,5	40,18	375	C/Fan*			
	44	122,9	1,9	34,35	390	B/Fan*			
	48	113,1	1,9	31,49	423	B/Fan*			
	54	101,0	2,4	27,86	390	B/Fan*			
	59	89,2	2,5	25,54	423	B/Fan*			
	69	78,5	2,6	21,84	464	B/Fan*			
630	151	41,2	1,4	9,91	279	C	**SK 11207 - 400M/4**	1390	170
	166	36,2	1,5	9,05	297	C			
	191	31,9	1,7	7,87	319	C/Fan*			
	209	29,2	1,7	7,19	343	C/Fan*			
	238	25,9	1,9	6,31	319	C/Fan*			
	260	23,7	1,9	5,77	372	B/Fan*			
	96	63,5	1,5	15,69	317	C/Fan*	**SK 12207 - 400M/4**	2005	170
	104	58,4	1,5	14,39	356	B/Fan*			
	118	50,9	1,7	12,66	335	C/Fan*			
	129	47,6	1,7	11,60	356	B/Fan*			
	151	39,0	2,1	9,93	356	B/Fan*			
	165	35,9	2,1	9,10	407	B/Fan*			
	189	32,0	2,4	7,93	407	B/Fan*			
	206	29,5	2,4	7,27	439	B/Fan*			
	244	24,3	2,9	6,16	407	B/Fan*			
	266	22,3	2,9	5,64	475	B/Fan*			
	68	87,1	1,4	21,90	296	E	**SK 13307 - 400M/4**	3040	170

** ⇨ 65

630 kW
710 kW

n_1 = 1500 min^{-1}

P_1 kW	n_2 [rpm]	M_2 [kNm]	f_B [-]	iges [-]	$P_{t0.20}$ [kW]	CS [-]		kg	mm
630	75	80,8	1,7	20,05	355	B/Fan*	**SK 13207 - 400M/4**	2820	170
	82	74,4	1,7	18,38	394	B/Fan*			
	97	61,5	2,1	15,53	394	B/Fan*			
	105	58,2	2,1	14,24	418	B/Fan*			
	121	50,3	2,4	12,40	444	B/Fan*			
	132	46,3	2,4	11,37	473	B/Fan*			
	148	41,1	2,8	10,11	473	B/Fan*			
	162	36,6	2,9	9,26	507	B/Fan*			
	34	173,1	1,4	43,83	348	D/Fan*	**SK 15307 - 400M/4**	4700	170
	37	159,3	1,4	40,18	375	C/Fan*			
	44	137,4	1,7	34,35	390	C/Fan*			
	48	126,4	1,7	31,49	423	C/Fan*			
	54	110,2	2,2	27,86	390	C/Fan*			
	59	101,4	2,2	25,54	423	C/Fan*			
	69	88,8	2,3	21,84	464	B/Fan*			
	76	78,3	3,0	19,76	513	A/Fan*	**SK 15207 - 400M/4**	4460	170
	83	72,0	3,0	18,11	573	A/Fan*			
710	166	41,8	1,3	9,05	297	C	**SK 11207 - 400L/4**	1390	170
	191	36,2	1,5	7,87	319	C			
	209	33,1	1,5	7,19	343	C			
	238	28,9	1,7	6,31	319	C			
	260	26,5	1,7	5,77	372	C/Fan*			
	96	73,2	1,3	15,69	317	C	**SK 12207 - 400L/4**	2005	170
	104	67,4	1,3	14,39	356	C/Fan*			
	118	57,7	1,5	12,66	335	C			
	129	54,0	1,5	11,60	356	C/Fan*			
	151	45,5	1,8	9,93	356	C/Fan*			
	165	41,9	1,8	9,10	407	C/Fan*			
	189	36,6	2,1	7,93	407	C/Fan*			
	206	33,7	2,1	7,27	439	B/Fan*			
	244	28,2	2,5	6,16	407	C/Fan*			
	266	25,9	2,5	5,64	475	B/Fan*			
	75	91,6	1,5	20,05	355	C/Fan*	**SK 13207 - 400L/4**	2820	170
	82	84,3	1,5	18,38	394	C/Fan*			
	97	71,7	1,8	15,53	394	C/Fan*			
	105	64,4	1,9	14,24	418	C/Fan*			
	121	54,8	2,2	12,40	444	B/Fan*			
	132	50,5	2,2	11,37	473	B/Fan*			
	148	46,0	2,5	10,11	473	B/Fan*			
	162	42,4	2,5	9,26	507	B/Fan*			
	188	35,9	3,0	7,98	546	B/Fan*			
	205	33,0	3,0	7,31	592	A/Fan*			
	44	155,7	1,5	34,35	390	D/Fan*	**SK 15307 - 400L/4**	4700	170
	48	143,2	1,5	31,49	423	D/Fan*			
	54	127,6	1,9	27,86	390	D/Fan*			
	59	117,4	1,9	25,54	423	D/Fan*			
	69	97,2	2,1	21,84	464	C/Fan*			
	76	90,3	2,6	19,76	513	B/Fan*	**SK 15207 - 400L/4**	4460	170
	83	83,1	2,6	18,11	573	B/Fan*			

** ⇨ 65

800 kW
900 kW

n_1 = 1500 min^{-1}

P_1 kW	n_2 [rpm]	M_2 [kNm]	f_B [-]	iges [-]	$P_{t0.20}$ [kW]	CS [-]		kg	mm
800	191	38,8	1,4	7,87	319	D	**SK 11207 - 450S/4**	1390	170
	209	35,4	1,4	7,19	343	D			
	238	32,8	1,5	6,31	319	D			
	260	30,0	1,5	5,77	372	D			
	118	66,5	1,3	12,66	335	D	**SK 12207 - 450S/4**	2005	170
	129	57,9	1,4	11,60	356	D			
	151	51,2	1,6	9,93	356	D			
	165	47,1	1,6	9,10	407	C/Fan*			
	189	40,5	1,9	7,93	407	C/Fan*			
	206	37,2	1,9	7,27	439	C/Fan*			
	244	32,0	2,2	6,16	407	C/Fan*			
	266	28,1	2,3	5,64	475	C/Fan*			
	75	105,7	1,3	20,05	355	D	**SK 13207 - 450S/4**	2820	170
	82	90,3	1,4	18,38	394	C			
	97	80,7	1,6	15,53	394	C			
	105	71,9	1,7	14,24	418	C/Fan*			
	121	63,5	1,9	12,40	444	C/Fan*			
	132	58,4	1,9	11,37	473	C/Fan*			
	148	52,3	2,2	10,11	473	C/Fan*			
	162	48,2	2,2	9,26	507	C/Fan*			
	188	39,9	2,7	7,98	546	B/Fan*			
	205	36,7	2,7	7,31	592	B/Fan*			
	44	179,7	1,3	34,35	390	E	**SK 15307 - 450S/4**	4700	170
	48	165,2	1,3	31,49	423	E/Fan*			
	54	142,6	1,7	27,86	390	E			
	59	131,2	1,7	25,54	423	E/Fan*			
	69	113,4	1,8	21,84	464	E/Fan*			
	76	102,1	2,3	19,76	513	C/Fan*	**SK 15207 - 450S/4**	4460	170
	83	94,0	2,3	18,11	573	B/Fan*			
	97	78,0	2,9	15,48	573	B/Fan*			
	106	71,8	2,9	14,19	609	B/Fan*			
900	238	35,1	1,4	6,31	319	E	**SK 11207 - 450M/4**	1390	170
	260	32,1	1,4	5,77	372	E			
	151	58,5	1,4	9,93	356	E	**SK 12207 - 450M/4**	2005	170
	165	53,9	1,4	9,10	407	D			
	189	45,2	1,7	7,93	407	D			
	206	41,6	1,7	7,27	439	D			
	244	35,2	2,0	6,16	407	D			
	266	32,4	2,0	5,64	475	D/Fan*			
	97	86,1	1,5	15,53	394	D	**SK 13207 - 450M/4**	2820	170
	105	81,5	1,5	14,24	418	D			
	121	70,9	1,7	12,40	444	D			
	132	65,3	1,7	11,37	473	D/Fan*			
	148	57,6	2,0	10,11	473	D/Fan*			
	162	53,0	2,0	9,26	507	C/Fan*			
	188	44,9	2,4	7,98	546	C/Fan*			
	205	41,3	2,4	7,31	592	C/Fan*			
	235	37,0	2,7	6,38	546	C/Fan*			
	256	34,0	2,7	5,85	592	C/Fan*			
	54	161,7	1,5	27,86	390	F	**SK 15307 - 450M/4**	4700	170

** ⇨ 65

900 kW
1000 kW

n_1 = 1500 min^{-1}

P_1 kW	n_2 [rpm]	M_2 [kNm]	f_B [-]	iges [-]	$P_{t0.20}$ [kW]	CS [-]		kg	mm
900	59	148,7	1,5	25,54	423	F	**SK 15307 - 450M/4**	4700	170
	69	127,6	1,6	21,84	464	F/Fan*			
	76	111,9	2,1	19,76	513	C/Fan*	**SK 15207 - 450M/4**	4460	170
	83	102,9	2,1	18,11	573	C/Fan*			
	97	87,0	2,6	15,48	573	C/Fan*			
	106	80,1	2,6	14,19	609	C/Fan*			
	120	72,9	2,8	12,48	592	B/Fan*			
	131	64,7	2,9	11,44	696	B/Fan*			
1000	165	58,0	1,3	9,10	407	E	**SK 12207 - 450L/4**	2005	170
	189	51,3	1,5	7,93	407	E			
	206	47,1	1,5	7,27	439	E			
	244	39,1	1,8	6,16	407	E			
	266	35,9	1,8	5,64	475	E			
	97	99,3	1,3	15,53	394	E	**SK 13207 - 450L/4**	2820	170
	105	94,1	1,3	14,24	418	E			
	121	80,4	1,5	12,40	444	E			
	132	74,0	1,5	11,37	473	E			
	148	63,9	1,8	10,11	473	E			
	162	58,9	1,8	9,26	507	D/Fan*			
	188	51,3	2,1	7,98	546	D/Fan*			
	205	47,2	2,1	7,31	592	C/Fan*			
	235	40,0	2,5	6,38	546	D/Fan*			
	256	36,8	2,5	5,85	592	C/Fan*			
	54	173,2	1,4	27,86	390	G	**SK 15307 - 450L/4**	4700	170
	59	159,3	1,4	25,54	423	G			
	69	136,1	1,5	21,84	464	F			
	76	123,6	1,9	19,76	513	D/Fan*	**SK 15207 - 450L/4**	4460	170
	83	113,7	1,9	18,11	573	D/Fan*			
	97	98,4	2,3	15,48	573	D/Fan*			
	106	90,5	2,3	14,19	609	C/Fan*			
	120	78,5	2,6	12,48	592	C/Fan*			
	131	72,2	2,6	11,44	696	C/Fan*			

** ⇨ 📖 65

SK ..507

P_N | M_{2max}

i_N [-]	n_{1N} [min^{-1}]	n_{2N} [min^{-1}]		SK 7507	SK 8507	SK 9507	SK 10507	SK 11507	SK 12507	SK 13507	SK 15507	
450	1500	3,33	P_N		11		18					kW
	1000	2,22			7		12					
			M_{2max}		30		50					kNm
400	1500	3,75	P_N	10	11	16	19	30	41	57	99	kW
	1000	2,50		7	7	11	13	20	27	38	66	
			M_{2max}	25	28	41	49	77	104	145	248	kNm
355	1500	4,23	P_N	10	13	18	22	30	41	57	99	kW
	1000	2,82		7	9	12	14	20	27	38	66	
			M_{2max}	24	31	40	50	70	95	133	227	kNm
315	1500	4,76	P_N	12	14	20	23	33	50	67	119	kW
	1000	3,17		8	10	13	15	22	33	45	79	
			M_{2max}	25	31	41	49	67	100	133	234	kNm
280	1500	5,36	P_N	13	17	21	28	35	50	67	119	kW
	1000	3,57		9	12	14	19	23	33	45	79	
			M_{2max}	24	31	40	51	64	91	122	215	kNm
250	1500	6,00	P_N	16	19	26	30	48	65	90	156	kW
	1000	4,00		11	12	17	20	32	44	60	104	
			M_{2max}	25	31	41	49	76	103	144	246	kNm
224	1500	6,70	P_N	17	21	28	35	48	65	90	156	kW
	1000	4,46		11	14	18	23	32	44	60	104	
			M_{2max}	24	29	40	50	70	94	132	225	kNm
200	1500	7,50	P_N	20	21	32	35	59	81	112	191	kW
	1000	5,00		13	14	21	23	39	54	75	128	
			M_{2max}	25	27	41	46	73	99	138	236	kNm
180	1500	8,33	P_N	20	27	34	43	59	81	112	191	kW
	1000	5,56		13	18	23	29	39	54	75	128	
			M_{2max}	23	31	40	51	67	91	127	216	kNm
160	1500	9,38	P_N	24	29	39	45	74	102	140	246	kW
	1000	6,25		16	19	26	30	49	68	94	164	
			M_{2max}	25	31	41	49	74	102	143	244	kNm
140	1500	10,71	P_N	26	31	41	56	75	102	140	246	kW
	1000	7,14		17	20	28	37	50	68	94	164	
			M_{2max}	24	27	40	51	69	93	131	223	kNm
125	1500	12,00	P_N	28	31	51	59	92	125	175	301	kW
	1000	8,00		18	20	34	39	61	84	116	201	
			M_{2max}	22	25	42	49	72	98	137	234	kNm

** ⇨ 📖 65

SK ..507

P_{to} | P_{tF} | P_{tc}

i_N [-]	CS - Typ		SK 7507	SK 8507	SK 9507	SK 10507	SK 11507	SK 12507	SK 13507	SK 15507	
450	---	$P_{t0.20}$		53		78					kW
	FAN	$P_{tF.20}$		75		109					
	CC	$P_{tC.20}$		20		40					kNm
400	---	$P_{t0.20}$	49	54	72	80	84	108	134	191	kW
	FAN	$P_{tF.20}$	69	76	100	112	118	151	188	267	
	CC	$P_{tC.20}$	20	20	40	40	97	135	173	173	kNm
355	---	$P_{t0.20}$	48	54	70	80	86	112	139	203	kW
	FAN	$P_{tF.20}$	68	76	98	112	120	157	195	284	
	CC	$P_{tC.20}$	20	20	40	40	97	135	173	173	kNm
315	---	$P_{t0.20}$	49	57	72	83	87	112	148	199	kW
	FAN	$P_{tF.20}$	69	79	100	116	122	157	207	278	
	CC	$P_{tC.20}$	20	20	40	40	97	135	173	173	kNm
280	---	$P_{t0.20}$	52	57	75	83	91	116	148	203	kW
	FAN	$P_{tF.20}$	72	79	105	116	127	163	207	284	
	CC	$P_{tC.20}$	20	20	40	40	97	135	173	173	kNm
250	---	$P_{t0.20}$	50	58	73	85	93	119	148	207	kW
	FAN	$P_{tF.20}$	71	81	102	119	130	166	207	290	
	CC	$P_{tC.20}$	20	20	40	40	97	135	173	173	kNm
224	---	$P_{t0.20}$	52	58	75	85	95	124	154	216	kW
	FAN	$P_{tF.20}$	72	81	105	119	133	174	216	303	
	CC	$P_{tC.20}$	20	20	40	40	97	135	173	173	kNm
200	---	$P_{t0.20}$	54	60	78	89	93	124	158	221	kW
	FAN	$P_{tF.20}$	75	84	109	124	130	174	221	310	
	CC	$P_{tC.20}$	20	20	40	40	97	135	173	173	kNm
180	---	$P_{t0.20}$	55	59	80	87	97	133	161	232	kW
	FAN	$P_{tF.20}$	77	83	112	121	136	186	226	325	
	CC	$P_{tC.20}$	20	20	40	40	97	135	173	173	kNm
160	---	$P_{t0.20}$	53	60	76	89	101	130	161	227	kW
	FAN	$P_{tF.20}$	74	84	107	124	142	181	226	317	
	CC	$P_{tC.20}$	20	20	40	40	97	135	173	173	kNm
140	---	$P_{t0.20}$	54	60	78	89	101	136	169	238	kW
	FAN	$P_{tF.20}$	75	84	109	124	142	190	237	333	
	CC	$P_{tC.20}$	20	20	40	40	97	135	173	173	kNm
125	---	$P_{t0.20}$	54	63	78	93	101	136	169	243	kW
	FAN	$P_{tF.20}$	75	88	109	130	142	190	237	341	
	CC	$P_{tC.20}$	20	20	40	40	97	135	173	173	kNm

** ⇨ 📖 65

SK ..507

P_N | M_{2max}

i_N [-]	n_{1N} [min^{-1}]	n_{2N} [min^{-1}]		SK 7507	SK 8507	SK 9507	SK 10507	SK 11507	SK 12507	SK 13507	SK 15507	
112	1500	13,39	P_N	28		54		92	126	175	302	kW
	1000	8,93		18		36		61	84	117	202	
			M_{2max}	20		40		66	90	126	215	kNm
100	1500	15,00	P_N					116	159	222	385	kW
	1000	10,00						77	106	148	257	
			M_{2max}									
90	1500	16,67	P_N					117	160	223	387	kW
	1000	11,11						78	106	149	258	
			M_{2max}					69	93	130	223	kNm
80	1500	18,75	P_N					130	197	250	420	kW
	1000	12,50						87	131	167	280	
			M_{2max}					65	98	124	207	kNm

** ⇨ 📖 65

SK ..507

P_{to} | P_{tF} | P_{tc}

i_N [-]	CS - Typ		SK 7507	SK 8507	SK 9507	SK 10507	SK 11507	SK 12507	SK 13507	SK 15507	
112	---	$P_{t0.20}$	56		82		106	143	173	256	kW
	FAN	$P_{tF.20}$	79		114		149	200	242	359	
	CC	$P_{tC.20}$	20		40		97	135	173	173	
100	---	$P_{t0.20}$					104	133	169	243	kW
	FAN	$P_{tF.20}$					145	186	237	341	
	CC	$P_{tC.20}$					97	135	173	173	
90	---	$P_{t0.20}$					109	139	178	256	kW
	FAN	$P_{tF.20}$					152	195	249	359	
	CC	$P_{tC.20}$					97	135	173	173	
80	---	$P_{t0.20}$					112	143	182	271	kW
	FAN	$P_{tF.20}$					156	200	255	379	
	CC	$P_{tC.20}$					97	135	173	173	

** ⇨ 📖 65

SK ..407

P_N | M_{2max}

i_N [-]	n_{1N} [min^{-1}]	n_{2N} [min^{-1}]		SK 7407	SK 8407	SK 9407	SK 10407	SK 11407	SK 12407	SK 13407	SK 15407	
112	1500	49,11	P_N		42		65					kW
	1000	44,64			28		43					
			M_{2max}		31		49					kNm
100	1500	45,00	P_N	38	43	63	66					kW
	1000	40,00		26	28	42	44					
			M_{2max}	25	29	42	45					kNm
90	1500	38,89	P_N	39	52	66	78					kW
	1000	33,33		26	35	44	52					
			M_{2max}	23	29	40	46					kNm
80	1500	31,25	P_N	47	52	77	81					kW
	1000	25,00		31	34	51	54					
			M_{2max}	24	28	40	43					kNm
71	1500	21,13	P_N	47	62	79	93	159	217	303	522	kW
	1000	14,08		31	41	53	62	106	145	202	348	
			M_{2max}	22	28	37	43	73	98	137	233	kNm
63	1500	23,81	P_N	56	61	91	96	158	220	304	528	kW
	1000	15,87		37	41	60	64	105	147	202	352	
			M_{2max}	23	26	37	40	66	91	126	216	kNm
56	1500	26,79	P_N	55	84	94	127	174	269	379	532	kW
	1000	17,86		37	56	62	84	116	179	253	355	
			M_{2max}	21	29	35	46	62	95	133	186	kNm
50	1500	30,00	P_N	76	83	124	130	175	271	381	531	kW
	1000	20,00		51	56	83	87	116	181	254	354	
			M_{2max}	24	28	40	43	57	88	122	170	kNm
45	1500	33,33	P_N	76	99	127	150	259	354	489	844	kW
	1000	22,22		51	66	85	100	172	236	326	563	
			M_{2max}	22	28	37	43	73	98	136	231	kNm
40	1500	37,50	P_N	90	99	146	155	257	358	495	849	kW
	1000	25,00		60	66	98	103	172	239	330	566	
			M_{2max}	23	26	37	40	66	91	126	213	kNm
35,5	1500	42,25	P_N	90	118	151	177	290	428	604	850	kW
	1000	28,17		60	79	101	118	193	285	403	566	
			M_{2max}	21	26	35	40	64	93	130	182	kNm
31,5	1500	47,62	P_N	106	118	173	183	315	431	608	854	kW
	1000	31,75		71	79	115	122	210	288	405	569	
			M_{2max}	21	24	35	38	63	86	120	168	kNm
28	1500	53,57	P_N	106	162	179	244	401	548	765	1147	kW
	1000	35,71		71	108	119	163	267	365	510	764	
			M_{2max}	19	28	33	43	73	98	137	203	kNm
25	1500	60,00	P_N	146	162	239	252	387	554	767	1226	kW
	1000	40,00		97	108	159	168	258	369	512	817	
			M_{2max}	23	26	37	40	64	91	126	199	kNm

** ⇨ 📖 65

SK ..407

P_{to} | P_{tF} | P_{tc}

i_N [-]	CS - Typ		SK 7407	SK 8407	SK 9407	SK 10407	SK 11407	SK 12407	SK 13407	SK 15407	
112	---	$P_{t0.20}$		71		105					kW
	FAN	$P_{tF.20}$		100		147					
	CC	$P_{tC.20}$		20		40					
100	---	$P_{t0.20}$	65	75	95	111					kW
	FAN	$P_{tF.20}$	92	106	133	155					
	CC	$P_{tC.20}$	20	20	40	40					
90	---	$P_{t0.20}$	67	78	98	114					kW
	FAN	$P_{tF.20}$	94	109	137	159					
	CC	$P_{tC.20}$	20	20	40	40					
80	---	$P_{t0.20}$	69	82	100	121					kW
	FAN	$P_{tF.20}$	97	115	140	169					
	CC	$P_{tC.20}$	20	20	40	40					
71	---	$P_{t0.20}$	73	82	106	121	124	158	203	286	kW
	FAN	$P_{tF.20}$	103	115	149	169	173	222	284	401	
	CC	$P_{tC.20}$	20	20	40	40	140	195	249	249	
63	---	$P_{t0.20}$	73	85	106	125	131	168	215	304	kW
	FAN	$P_{tF.20}$	103	119	149	174	184	235	301	426	
	CC	$P_{tC.20}$	20	20	40	40	140	195	249	249	
56	---	$P_{t0.20}$	76	78	110	114	131	173	215	304	kW
	FAN	$P_{tF.20}$	106	109	154	159	184	242	301	426	
	CC	$P_{tC.20}$	20	20	40	40	140	195	249	249	
50	---	$P_{t0.20}$	69	82	100	121	135	184	222	314	kW
	FAN	$P_{tF.20}$	97	115	140	169	189	258	311	440	
	CC	$P_{tC.20}$	20	20	40	40	140	195	249	249	
45	---	$P_{t0.20}$	73	82	106	121	124	158	203	286	kW
	FAN	$P_{tF.20}$	103	115	149	169	173	222	284	401	
	CC	$P_{tC.20}$	20	20	40	40	140	195	249	249	
40	---	$P_{t0.20}$	73	85	106	125	131	168	215	304	kW
	FAN	$P_{tF.20}$	103	119	149	174	184	235	301	426	
	CC	$P_{tC.20}$	20	20	40	40	140	195	249	249	
35,5	---	$P_{t0.20}$	76	85	110	125	131	173	215	304	kW
	FAN	$P_{tF.20}$	106	119	154	174	184	242	301	426	
	CC	$P_{tC.20}$	20	20	40	40	140	195	249	249	
31,5	---	$P_{t0.20}$	76	91	110	133	135	184	222	314	kW
	FAN	$P_{tF.20}$	106	127	154	186	189	258	311	440	
	CC	$P_{tC.20}$	20	20	40	40	140	195	249	249	
28	---	$P_{t0.20}$	81	82	117	121	124	158	203	286	kW
	FAN	$P_{tF.20}$	113	115	164	169	173	222	284	401	
	CC	$P_{tC.20}$	20	20	40	40	140	195	249	249	
25	---	$P_{t0.20}$	73	85	106	125	131	168	215	304	kW
	FAN	$P_{tF.20}$	103	119	149	174	184	235	301	426	
	CC	$P_{tC.20}$	20	20	40	40	140	195	249	249	

** ⇨ 📖 65

SK ..407

P_N | M_{2max}

i_N [-]	n_{1N} [min^{-1}]	n_{2N} [min^{-1}]		SK 7407	SK 8407	SK 9407	SK 10407	SK 11407	SK 12407	SK 13407	SK 15407	
22,4	1500	66,96	P_N	146	192	246	288	434	677	934	1370	kW
	1000	44,64		97	128	164	192	290	451	623	913	
			M_{2max}	21	26	35	40	62	95	130	190	kNm
20	1500	75,00	P_N	173	192	281	297	435	683	959	1462	kW
	1000	50,00		115	128	188	198	290	455	639	975	
			M_{2max}	21	24	35	38	56	88	122	186	kNm
18	1500	83,33	P_N	173		291		505	811	1098	1538	kW
	1000	55,56		115		194		337	541	732	1026	
			M_{2max}	19		33		58	92	122	172	kNm
16	1500	93,75	P_N					557	808	1139	1551	kW
	1000	62,50						371	539	759	1034	
			M_{2max}					58	84	116	159	kNm
14	1500	107,14	P_N					624	892	1149	1735	kW
	1000	71,43						416	594	766	1157	
			M_{2max}					55	79	104	152	kNm
12,5	1500	120,00	P_N					624	920	1205	1856	kW
	1000	80,00						416	613	803	1237	
			M_{2max}					51	75	100	149	kNm

** ⇨ 📖 63

SK ..407

P_{to} | P_{tF} | P_{tc}

i_N [-]	CS - Typ		SK 7407	SK 8407	SK 9407	SK 10407	SK 11407	SK 12407	SK 13407	SK 15407	
22,4	---	$P_{t0.20}$	76	85	110	125	131	173	215	304	kW
	FAN	$P_{tF.20}$	106	119	154	174	184	242	301	426	
	CC	$P_{tC.20}$	20	20	40	40	140	195	249	249	
20	---	$P_{t0.20}$	76	91	110	133	135	184	222	314	kW
	FAN	$P_{tF.20}$	106	127	154	186	189	258	311	440	
	CC	$P_{tC.20}$	20	20	40	40	140	195	249	249	
18	---	$P_{t0.20}$	81		117		139	178	229	325	kW
	FAN	$P_{tF.20}$	113		164		195	249	321	455	
	CC	$P_{tC.20}$	20		40		140	195	249	249	
16	---	$P_{t0.20}$					144	184	237	336	kW
	FAN	$P_{tF.20}$					201	258	331	470	
	CC	$P_{tC.20}$					140	195	249	249	
14	---	$P_{t0.20}$					144	184	237	336	kW
	FAN	$P_{tF.20}$					201	258	331	470	
	CC	$P_{tC.20}$					140	195	249	249	
12,5	---	$P_{t0.20}$					149	197	245	361	kW
	FAN	$P_{tF.20}$					208	275	343	505	
	CC	$P_{tC.20}$					140	195	249	249	

** ⇨ 📖 63

SK ..507
SK ..407 i_{ges}

i_N	SK 7507	SK 8507	SK 9507	SK 10507	SK 11507	SK 12507	SK 13507	SK 15507
450		438,67		440,63				
400	398,37	412,85	392,65	402,38	405,18	400,33	401,17	395,26
355	362,29	356,15	357,22	364,58	370,12	366,99	367,77	362,35
315	323,47	335,21	324,86	332,92	316,62	313,96	310,73	309,77
280	294,18	274,38	295,57	280,39	289,22	287,82	284,85	283,98
250	249,18	258,22	249,83	256,05	249,61	246,62	250,52	246,83
224	226,60	220,87	227,29	225,57	228,01	226,08	229,66	226,28
200	200,62	207,90	200,99	205,98	195,05	193,41	194,04	193,45
180	182,45	179,35	182,86	186,63	178,17	177,31	177,88	177,34
160	162,86	168,79	166,30	170,43	158,47	156,94	159,35	155,41
140	148,13	138,15	151,28	143,51	144,75	143,87	146,08	142,47
125	125,47	130,05	127,88	131,07	123,83	123,08	123,42	121,80
112	114,10		116,35		113,11	112,83	113,14	111,66
100					101,26	100,05	100,26	98,78
90					92,50	91,72	91,91	90,56
80					79,13	78,46	77,66	77,42
i_N	**SK 7407**	**SK 8407**	**SK 9407**	**SK 10407**	**SK 11407**	**SK 12407**	**SK 13407**	**SK 15407**
112		114,14		117,65				
100	103,66	107,43	104,85	107,43				
90	94,30	88,85	95,36	91,55				
80	80,67	83,62	81,57	83,62				
71	73,39	70,36	74,21	72,49	71,80	70,94	71,09	70,05
63	63,90	66,23	64,60	66,23	65,59	65,04	65,17	64,21
56	58,09	55,02	58,79	56,70	56,11	55,64	55,07	54,90
50	49,96	51,78	50,51	51,78	51,25	51,01	50,48	50,33
45	45,45	43,57	45,95	44,89	44,08	43,55	43,64	43,00
40	39,57	41,01	40,00	41,01	40,26	39,92	40,01	39,42
35,5	35,97	34,53	36,40	35,59	34,45	34,16	33,80	33,70
31,5	31,36	32,50	31,72	32,50	31,46	31,31	30,99	30,89
28	28,53	26,76	28,85	27,56	28,50	28,16	28,22	27,81
25	24,30	25,18	24,56	25,18	26,04	25,82	25,87	25,49
22,4	22,09	21,20	22,35	21,86	22,27	22,09	21,86	21,79
20	19,26	19,96	19,48	19,96	20,35	20,25	20,04	19,98
18	17,52		17,72		17,89	17,81	17,45	17,56
16					16,34	16,33	16,00	16,10
14					13,95	13,97	14,22	13,76
12,5					12,74	12,81	13,04	12,61

** ⇨ 📖 65

J_{red} SK ..507 SK ..407

i_N	SK 7507	SK 8507	SK 9507	SK 10507	SK 11507	SK 12507	SK 13507	SK 15507	
450		0,01		0,03					kgm²
400	0,01	0,01	0,03	0,03	0,03	0,05	0,08	0,18	kgm²
355	0,01	0,01	0,03	0,03	0,03	0,05	0,08	0,18	kgm²
315	0,01	0,01	0,03	0,03	0,03	0,05	0,09	0,19	kgm²
280	0,01	0,01	0,03	0,04	0,03	0,05	0,09	0,19	kgm²
250	0,01	0,01	0,04	0,03	0,03	0,06	0,10	0,22	kgm²
224	0,01	0,01	0,03	0,03	0,03	0,06	0,10	0,22	kgm²
200	0,01	0,01	0,03	0,03	0,04	0,07	0,12	0,25	kgm²
180	0,01	0,01	0,03	0,04	0,04	0,07	0,12	0,25	kgm²
160	0,01	0,01	0,04	0,04	0,04	0,08	0,14	0,29	kgm²
140	0,01	0,02	0,03	0,04	0,04	0,08	0,14	0,30	kgm²
125	0,02	0,02	0,04	0,04	0,05	0,09	0,17	0,36	kgm²
112	0,02		0,04		0,05	0,10	0,17	0,36	kgm²
100					0,07	0,12	0,21	0,46	kgm²
90					0,07	0,12	0,22	0,47	kgm²
80					0,09	0,17	0,29	0,63	kgm²
i_N	SK 7407	SK 8407	SK 9407	SK 10407	SK 11407	SK 12407	SK 13407	SK 15407	
112		0,02		0,05					kgm²
100	0,02	0,02	0,05	0,05					kgm²
90	0,02	0,03	0,05	0,06					kgm²
80	0,03	0,03	0,05	0,06					kgm²
71	0,03	0,03	0,06	0,06	0,09	0,16	0,29	0,62	kgm²
63	0,03	0,03	0,06	0,07	0,09	0,17	0,30	0,64	kgm²
56	0,03	0,06	0,06	0,12	0,11	0,20	0,36	0,78	kgm²
50	0,06	0,06	0,11	0,12	0,12	0,21	0,37	0,80	kgm²
45	0,06	0,07	0,11	0,13	0,13	0,23	0,41	0,87	kgm²
40	0,07	0,07	0,12	0,13	0,13	0,24	0,42	0,90	kgm²
35,5	0,07	0,08	0,13	0,15	0,16	0,28	0,49	1,06	kgm²
31,5	0,07	0,08	0,14	0,15	0,16	0,29	0,51	1,09	kgm²
28	0,07	0,11	0,14	0,21	0,25	0,45	0,79	1,71	kgm²
25	0,10	0,11	0,21	0,22	0,26	0,45	0,81	1,74	kgm²
22,4	0,10	0,12	0,21	0,24	0,27	0,48	0,86	1,85	kgm²
20	0,11	0,12	0,23	0,25	0,28	0,49	0,87	1,88	kgm²
18	0,11		0,24		0,35	0,63	1,12	2,41	kgm²
16					0,36	0,64	1,15	2,47	kgm²
14					0,43	0,77	1,37	2,95	kgm²
12,5					0,44	0,79	1,40	3,03	kgm²

** ⇨ 📖 65

3 kW
7,5 kW

n_1 = 1000 min^{-1}

P_1 kW	n_2 [rpm]	M_2 [kNm]	f_B [-]	iges [-]	$P_{t0.20}$ [kW]	CS [-]		kg	mm
3	2,5	11,5	2,2	398,37	48	---	**SK 7507 - 132S/6**	509	178
	2,8	10,2	2,3	362,29	49	---			
	3,1	9,2	2,7	323,47	52	---			
	3,4	8,4	2,9	294,18	50	---			
	2,3	12,5	2,4	438,67	54	---	**SK 8507 - 132S/6**	592	178
	2,4	11,9	2,3	412,85	54	---			
	2,8	10,2	3,0	356,15	57	---			
4	2,5	15,3	1,7	398,37	48	---	**SK 7507 - 132M/6**	509	178
	2,8	13,6	1,7	362,29	49	---			
	3,1	12,3	2,1	323,47	52	---			
	3,4	11,2	2,2	294,18	50	---			
	4,0	9,6	2,6	249,18	52	---			
	4,4	8,7	2,8	226,60	54	---			
	2,3	16,6	1,8	438,67	54	---	**SK 8507 - 132M/6**	592	178
	2,4	15,9	1,7	412,85	54	---			
	2,8	13,6	2,2	356,15	57	---			
	3,0	12,7	2,4	335,21	57	---			
	3,6	10,6	2,9	274,38	58	---			
	2,5	15,3	2,7	392,65	72	---	**SK 9507 - 132M/6**	1025	178
	2,8	13,6	2,9	357,22	70	---			
	2,3	16,6	3,0	440,63	78	---	**SK 10507 - 132M/6**	1169	178
5,5	3,1	16,9	1,5	323,47	52	---	**SK 7507 - 132M/6**	509	178
	3,4	15,4	1,6	294,18	50	---			
	4,0	13,1	1,9	249,18	52	---			
	4,4	11,9	2,0	226,60	54	---			
	5,0	10,5	2,4	200,62	55	---			
	5,5	9,6	2,4	178,45	53	---			
	6,1	8,6	2,9	162,86	54	---			
	2,8	18,8	1,6	356,15	57	---	**SK 8507 - 132M/6**	592	178
	3,0	17,5	1,7	335,21	57	---			
	3,6	14,6	2,1	274,38	58	---			
	3,9	13,5	2,3	258,22	58	---			
	4,5	11,7	2,5	220,87	60	---			
	4,8	10,9	2,5	207,90	59	---			
	2,5	21,0	1,9	392,65	72	---	**SK 9507 - 132M/6**	1025	178
	2,8	18,8	2,1	357,22	70	---			
	3,1	16,9	2,4	324,86	72	---			
	3,4	15,4	2,6	295,57	75	---			
	2,3	22,8	2,2	440,63	78	---	**SK 10507 - 132M/6**	1169	178
	2,5	21,0	2,3	402,38	80	---			
	2,7	19,5	2,6	364,58	80	---			
	3,0	17,5	2,8	332,92	83	---			
7,5	4,0	17,9	1,4	249,18	52	---	**SK 7507 - 160M/6**	509	178
	4,4	16,3	1,5	226,60	54	---			
	5,0	14,3	1,8	200,62	55	---			
	5,5	13,0	1,8	178,45	53	---			

** ⇨ 📖 65

7,5 kW
11 kW

n_1 = 1000 min^{-1}

P_1 kW	n_2 [rpm]	M_2 [kNm]	f_B [-]	iges [-]	$P_{t0.20}$ [kW]	CS [-]		kg	mm
7,5	6,1	11,7	2,2	162,86	54	---	**SK 7507 - 160M/6**	509	178
	6,8	10,5	2,3	148,13	54	---			
	8,0	9,0	2,5	125,47	56	---			
	8,8	8,1	2,5	114,10	58	---			
	3,6	19,9	1,5	274,38	58	---	**SK 8507 - 160M/6**	592	178
	3,9	18,4	1,7	258,22	58	---			
	4,5	15,9	1,8	220,87	60	---			
	4,8	14,9	1,8	207,90	59	---			
	5,6	12,8	2,4	179,35	60	---			
	5,9	12,1	2,6	168,79	60	---			
	7,2	9,9	2,7	138,15	63	---			
	7,7	9,3	2,7	130,05	63	---			
	2,5	28,7	1,4	392,65	72	---	**SK 9507 - 160M/6**	1025	178
	2,8	25,6	1,6	357,22	70	---			
	3,1	23,1	1,8	324,86	72	---			
	3,4	21,1	1,9	295,57	75	---			
	4,0	17,9	2,3	249,83	73	---			
	4,4	16,3	2,5	227,29	75	---			
	5,0	14,3	2,9	200,99	78	---			
	2,3	31,1	1,6	440,63	78	---	**SK 10507 - 160M/6**	1169	178
	2,5	28,7	1,7	402,38	80	---			
	2,7	26,5	1,9	364,58	80	---			
	3,0	23,9	2,0	332,92	83	---			
	3,6	19,9	2,5	280,39	83	---			
	3,9	18,4	2,7	256,05	85	---			
	2,5	28,7	2,7	405,18	83	---	**SK 11507 - 160M/6**	1535	178
	2,7	26,5	2,6	370,12	85	---			
	3,2	22,4	3,0	316,62	87	---			
11	6,1	17,2	1,5	162,86	54	---	**SK 7507 - 160L/6**	509	178
	6,8	15,4	1,6	148,13	54	---			
	8,0	13,1	1,7	125,47	56	---			
	8,8	11,9	1,7	114,10	58	---			
	9,6	10,9	2,3	103,66	69	---	**SK 7407 - 160L/6**	509	178
	11	9,6	2,4	94,30	73	---			
	12	8,8	2,8	80,67	73	---			
	14	7,5	2,9	73,39	76	---			
	5,6	18,8	1,6	179,35	60	---	**SK 8507 - 160L/6**	592	178
	5,9	17,8	1,7	168,79	60	---			
	7,2	14,6	1,8	138,15	63	---			
	7,7	13,6	1,9	130,05	63	---			
	8,8	11,9	2,6	114,14	78	---	**SK 8407 - 160L/6**	592	178
	9,3	11,3	2,6	107,43	82	---			
	4,0	26,3	1,6	249,83	73	---	**SK 9507 - 160L/6**	1025	178
	4,4	23,9	1,7	227,29	75	---			
	5,0	21,0	2,0	200,99	78	---			
	5,5	19,1	2,1	178,86	80	---			
	6,0	17,5	2,4	166,30	76	---			
	6,6	15,9	2,5	151,28	78	---			

** ⇨ 65

11 kW
15 kW

n_1 = 1000 min^{-1}

P_1 kW	n_2 [rpm]	M_2 [kNm]	f_B [-]	iges [-]	$P_{t0.20}$ [kW]	CS [-]		kg	mm
11	2,7	38,9	1,3	364,58	80	---	**SK 10507 - 160L/6**	1169	178
	3,0	35,0	1,4	332,92	83	---			
	3,6	29,2	1,7	280,39	83	---			
	3,9	26,9	1,8	256,05	85	---			
	4,4	23,9	2,1	225,57	85	---			
	4,9	21,4	2,1	205,98	89	---			
	5,4	19,5	2,6	186,63	87	---			
	5,9	17,8	2,8	170,43	89	---			
	2,5	42,0	1,8	405,18	83	---	**SK 11507 - 160L/6**	1535	178
	2,7	38,9	1,8	370,12	85	---			
	3,2	32,8	2,0	316,62	87	---			
	3,5	30,0	2,1	289,22	90	---			
	4,0	26,3	2,9	249,61	92	---			
	4,4	23,9	2,9	228,01	96	---			
	2,7	38,9	2,4	366,99	111	---	**SK 12507 - 160L/6**	2195	178
15	9,6	14,9	1,7	103,66	69	---	**SK 7407 - 180L/6**	509	178
	11	13,0	1,8	94,30	73	---			
	12	11,9	2,0	80,67	73	---			
	14	10,2	2,2	73,39	76	---			
	16	9,0	2,5	63,90	69	---			
	17	8,4	2,4	58,09	73	---			
	7,2	19,9	1,4	138,15	63	---	**SK 8507 - 180L/6**	592	178
	7,7	18,6	1,4	130,05	63	---			
	8,8	16,3	1,9	114,14	78	---	**SK 8407 - 180L/6**	592	178
	9,3	15,4	1,9	107,43	82	---			
	11	13,0	2,2	88,85	82	---			
	12	11,9	2,3	83,62	85	---			
	14	10,2	2,7	70,36	78	---			
	15	9,6	2,7	66,23	82	---			
	5,0	28,7	1,4	200,99	78	---	**SK 9507 - 180L/6**	1025	178
	5,5	26,0	1,5	178,86	80	---			
	6,0	23,9	1,7	166,30	76	---			
	6,6	21,7	1,8	151,28	78	---			
	7,8	18,4	2,3	127,88	78	---			
	8,6	16,7	2,4	116,35	82	---			
	9,5	15,1	2,8	104,85	100	---	**SK 9407 - 180L/6**	1025	178
	10	14,3	2,8	95,36	106	---			
	3,9	36,7	1,3	256,05	85	---	**SK 10507 - 180L/6**	1169	178
	4,4	32,6	1,5	225,57	85	---			
	4,9	29,2	1,6	205,98	89	---			
	5,4	26,5	1,9	186,63	87	---			
	5,9	24,3	2,0	170,43	89	---			
	7,0	20,5	2,5	143,51	89	---			
	7,6	18,8	2,6	131,07	93	---			
	8,5	16,9	2,9	117,65	114	---	**SK 10407 - 180L/6**	1169	178
	9,3	15,4	2,9	107,43	121	---			
	2,5	57,3	1,3	405,18	83	---	**SK 11507 - 180L/6**	1535	178
	2,7	53,1	1,3	370,12	85	---			
	3,2	44,8	1,5	316,62	87	---			
	3,5	40,9	1,6	289,22	90	---			
	4,0	35,8	2,1	249,61	92	---			

** ⇨ 📖 65

15 kW
18,5 kW

n_1 = 1000 min^{-1}

P_1 kW	n_2 [rpm]	M_2 [kNm]	f_B [-]	iges [-]	$P_{t0.20}$ [kW]	CS [-]		kg	mm
15	4,4	32,6	2,1	228,01	96	---	**SK 11507 - 180L/6**	1535	178
	5,1	28,1	2,6	195,05	94	---			
	5,6	25,6	2,6	178,17	98	---			
	2,5	57,3	1,8	400,33	107	---	**SK 12507 - 180L/6**	2195	178
	2,7	53,1	1,8	366,99	111	---			
	3,2	44,8	2,2	313,96	111	---			
	3,5	40,9	2,2	287,82	115	---			
	4,1	34,9	2,9	246,62	118	---			
	4,4	32,6	2,9	226,08	125	---			
	2,7	53,1	2,5	367,77	138	---	**SK 13507 - 180L/6**	3190	178
	3,2	44,8	3,0	310,73	146	---			
	3,5	40,9	3,0	284,85	149	---			
18,5	9,6	18,4	1,4	103,66	69	---	**SK 7407 - 200L/6**	509	178
	11	16,1	1,5	94,30	73	---			
	12	14,7	1,6	80,67	73	---			
	14	12,6	1,7	73,39	76	---			
	16	11,0	2,0	63,90	69	---			
	17	10,4	2,0	58,09	73	---			
	20	8,8	2,7	49,96	73	---			
	22	8,0	2,7	45,45	76	---			
	8,8	20,1	1,5	114,14	78	---	**SK 8407 - 200L/6**	592	178
	9,3	19,0	1,5	107,43	82	---			
	11	16,1	1,8	88,85	82	---			
	12	14,7	1,9	83,62	85	---			
	14	12,6	2,2	70,36	78	---			
	15	11,8	2,2	66,23	82	---			
	6,0	29,4	1,4	166,30	76	---	**SK 9507 - 200L/6**	1025	178
	6,6	26,8	1,5	151,28	78	---			
	7,8	22,7	1,8	127,88	78	---			
	8,6	20,5	1,9	116,35	82	---			
	9,5	18,6	2,3	104,85	100	---	**SK 9407 - 200L/6**	1025	178
	10	17,7	2,3	95,36	106	---			
	12	14,7	2,7	81,57	106	---			
	13	13,6	2,7	74,21	110	---			
	5,4	32,7	1,6	186,63	87	---	**SK 10507 - 200L/6**	1169	178
	5,9	29,9	1,6	170,43	89	---			
	7,0	25,2	2,0	143,51	89	---			
	7,6	23,2	2,1	131,07	93	---			
	8,5	20,8	2,3	117,65	114	---	**SK 10407 - 200L/6**	1169	178
	9,3	19,0	2,4	107,43	121	---			
	11	16,1	2,8	91,55	121	---			
	12	14,7	2,9	83,62	125	---			
	4,0	44,2	1,7	249,61	92	---	**SK 11507 - 200L/6**	1535	178
	4,4	40,2	1,7	228,01	96	---			
	5,1	34,6	2,1	195,05	94	---			
	5,6	31,5	2,1	178,17	98	---			
	6,3	28,0	2,7	158,47	102	---			
	6,9	25,6	2,7	144,75	102	---			

** ⇨ 65

18,5 kW
22 kW

n_1 = 1000 min^{-1}

P_1 kW	n_2 [rpm]	M_2 [kNm]	f_B [-]	iges [-]	$P_{t0.20}$ [kW]	CS [-]		kg	mm
18,5	2,5	70,7	1,5	400,33	107	---	**SK 12507 - 200L/6**	2195	178
	2,7	65,4	1,5	366,99	111	---			
	3,2	55,2	1,8	313,96	111	---			
	3,5	50,5	1,8	287,82	115	---			
	4,1	43,1	2,4	246,62	118	---			
	4,4	40,2	2,3	226,08	125	---			
	5,2	34,0	2,9	193,41	125	---			
	5,6	31,5	2,9	177,31	134	---			
	2,5	70,7	2,1	401,17	133	---	**SK 13507 - 200L/6**	3190	178
	2,7	65,4	2,0	367,77	138	---			
	3,2	55,2	2,4	310,73	146	---			
	3,5	50,5	2,4	284,85	149	---			
22	12	17,5	1,4	80,67	73	---	**SK 7407 - 200L/6**	509	178
	14	15,0	1,5	73,39	76	---			
	16	13,1	1,7	63,90	69	---			
	17	12,4	1,7	58,09	73	---			
	20	10,5	2,3	49,96	73	---			
	22	9,6	2,3	45,45	76	---			
	25	8,4	2,7	39,57	69	---			
	28	7,5	2,7	35,97	73	---			
	11	19,1	1,5	88,85	82	---	**SK 8407 - 200L/6**	592	178
	12	17,5	1,6	83,62	85	---			
	14	15,0	1,8	70,36	78	---			
	15	14,0	1,8	66,23	82	---			
	18	11,7	2,5	55,02	82	---			
	19	11,1	2,5	51,78	85	---			
	7,8	26,9	1,5	127,88	78	---	**SK 9507 - 200L/6**	1025	178
	8,6	24,4	1,6	116,35	82	---			
	9,5	22,1	1,9	104,85	100	---	**SK 9407 - 200L/6**	1025	178
	10	21,0	1,9	95,36	106	---			
	12	17,5	2,3	81,57	106	---			
	13	16,2	2,3	74,21	110	---			
	15	14,0	2,7	64,60	100	---			
	17	12,4	2,8	58,79	106	---			
	5,4	38,9	1,3	186,63	87	---	**SK 10507 - 200L/6**	1169	178
	5,9	35,6	1,4	170,43	89	---			
	7,0	30,0	1,7	143,51	89	---			
	7,6	27,6	1,8	131,07	93	---			
	8,5	24,7	2,0	117,65	114	---	**SK 10407 - 200L/6**	1169	178
	9,3	22,6	2,0	107,43	121	---			
	11	19,1	2,4	91,55	121	---			
	12	17,5	2,5	83,62	125	---			
	14	15,0	2,9	72,49	114	---			
	15	14,0	2,9	66,23	121	---			
	4,0	52,5	1,4	249,61	92	---	**SK 11507 - 200L/6**	1535	178
	4,4	47,8	1,5	228,01	96	---			
	5,1	41,2	1,8	195,05	94	---			
	5,6	37,5	1,8	178,17	98	---			
	6,3	33,3	2,2	158,47	102	---			
	6,9	30,4	2,3	144,75	102	---			
	8,1	25,9	2,8	123,83	102	---			
	8,8	23,9	2,8	113,11	107	---			

** ⇨ 65

22 kW
30 kW

n_1 = 1000 min^{-1}

P_1 kW	n_2 [rpm]	M_2 [kNm]	f_B [-]	iges [-]	$P_{t0.20}$ [kW]	CS [-]		kg	mm
22	3,2	65,7	1,5	313,96	111	---	**SK 12507 - 200L/6**	2195	178
	3,5	60,0	1,5	287,82	115	---			
	4,1	51,2	2,0	246,62	118	---			
	4,4	47,8	2,0	226,08	125	---			
	5,2	40,4	2,5	193,41	125	---			
	5,6	37,5	2,4	177,31	134	---			
	2,5	84,0	1,7	401,17	133	---	**SK 13507 - 200L/6**	3190	178
	2,7	77,8	1,7	367,77	138	---			
	3,2	65,7	2,0	310,73	146	---			
	3,5	60,0	2,0	284,85	149	---			
	4,0	52,5	2,7	250,52	149	---			
	4,4	47,8	2,8	229,66	156	---			
	2,5	84,0	3,0	395,26	189	---	**SK 15507 - 200L/6**	4945	178
	2,8	75,0	3,0	362,35	189	---			
30	20	14,3	1,7	49,96	73	---	**SK 7407 - 225M/6**	509	178
	22	13,0	1,7	45,45	76	---			
	25	11,5	2,0	39,57	69	---			
	28	10,2	2,0	35,97	73	---			
	32	9,0	2,4	31,36	73	---			
	35	8,2	2,4	28,53	76	---			
	14	20,5	1,3	70,36	78	---	**SK 8407 - 225M/6**	592	178
	15	19,1	1,4	66,23	82	---			
	18	15,9	1,8	55,02	82	---			
	19	15,1	1,8	51,78	85	---			
	23	12,5	2,2	43,57	78	---			
	24	11,9	2,2	41,01	82	---			
	29	9,9	2,6	34,53	82	---			
	31	9,2	2,6	32,50	85	---			
	9,5	30,2	1,4	104,85	100	---	**SK 9407 - 225M/6**	1025	178
	10	28,7	1,4	95,36	106	---			
	12	23,9	1,7	81,57	106	---			
	13	22,0	1,7	74,21	110	---			
	15	19,1	2,0	64,60	100	---			
	17	16,9	2,1	58,79	106	---			
	20	14,3	2,8	50,51	106	---			
	22	13,0	2,9	45,95	110	---			
	7,6	37,7	1,3	131,07	93	---	**SK 10507 - 225M/6**	1169	178
	8,5	33,7	1,4	117,65	114	---	**SK 10407 - 225M/6**	1169	178
	9,3	30,8	1,5	107,43	121	---			
	11	26,0	1,8	91,55	121	---			
	12	23,9	1,8	83,62	125	---			
	14	20,5	2,1	72,49	114	---			
	15	19,1	2,1	66,23	121	---			
	18	15,9	2,9	56,70	121	---			
	19	15,1	2,9	51,78	125	---			
	5,1	56,2	1,3	195,05	94	---	**SK 11507 - 225M/6**	1535	178
	5,6	51,2	1,3	178,17	98	---			
	6,3	45,5	1,6	158,47	102	---			
	6,9	41,5	1,7	144,75	102	---			
	8,1	35,4	2,0	123,83	102	---			
	8,8	32,6	2,0	113,11	107	---			
	9,9	28,9	2,6	101,26	105	---			
	11	26,0	2,6	92,50	110	---			

** ⇨ 65

30 kW
37 kW

n_1 = 1000 min^{-1}

P_1 kW	n_2 [rpm]	M_2 [kNm]	f_B [-]	iges [-]	$P_{t0.20}$ [kW]	CS [-]		kg	mm
30	13	22,0	3,0	79,13	113	---	**SK 11507 - 225M/6**	1535	178
	4,1	69,9	1,5	246,62	118	---	**SK 12507 - 225M/6**	2195	178
	4,4	65,1	1,4	226,08	125	---			
	5,2	55,1	1,8	193,41	125	---			
	5,6	51,2	1,8	177,31	134	---			
	6,4	44,8	2,3	156,94	131	---			
	7,0	40,9	2,3	143,87	137	---			
	8,1	35,4	2,8	123,08	137	---			
	8,9	32,2	2,8	112,83	144	---			
	3,2	89,5	1,5	310,73	146	---	**SK 13507 - 225M/6**	3190	178
	3,5	81,9	1,5	284,85	149	---			
	4,0	71,6	2,0	250,52	149	---			
	4,4	65,1	2,0	229,66	156	---			
	5,2	55,1	2,5	194,04	159	---			
	5,6	51,2	2,5	177,88	163	---			
	2,5	114,6	2,2	395,26	189	---	**SK 15507 - 225M/6**	4945	178
	2,8	102,3	2,2	362,35	189	---			
	3,2	89,5	2,6	309,77	189	---			
	3,5	81,9	2,6	283,98	189	---			
37	20	17,7	1,4	49,96	73	---	**SK 7407 - 250M/6**	509	178
	22	16,1	1,4	45,45	76	---			
	25	14,1	1,6	39,57	69	---			
	28	12,6	1,6	35,97	73	---			
	32	11,0	1,9	31,36	73	---			
	35	10,1	1,9	28,53	76	---			
	41	8,6	2,6	24,30	76	---			
	45	7,9	2,6	22,09	81	---			
	18	19,6	1,5	55,02	82	---	**SK 8407 - 250M/6**	592	178
	19	18,6	1,5	51,78	85	---			
	23	15,4	1,8	43,57	78	---			
	24	14,7	1,8	41,01	82	---			
	29	12,2	2,1	34,53	82	---			
	31	11,4	2,1	32,50	85	---			
	37	9,6	2,9	26,76	85	---			
	40	8,8	2,9	25,18	91	---			
	12	29,4	1,4	81,57	106	---	**SK 9407 - 250M/6**	1025	178
	13	27,2	1,4	74,21	110	---			
	15	23,6	1,6	64,60	100	---			
	17	20,8	1,7	58,79	106	---			
	20	17,7	2,3	50,51	106	---			
	22	16,1	2,3	45,95	110	---			
	25	14,1	2,6	40,00	100	---			
	27	13,1	2,7	36,40	106	---			
	11	32,1	1,4	91,55	121	---	**SK 10407 - 250M/6**	1169	178
	12	29,4	1,5	83,62	125	---			
	14	25,2	1,7	72,49	114	---			
	15	23,6	1,7	66,23	121	---			
	18	19,6	2,3	56,70	121	---			
	19	18,6	2,3	51,78	125	---			
	22	16,1	2,7	44,89	114	---			
	24	14,7	2,7	41,01	121	---			

** ⇨ 📖 65

37 kW
45 kW

n_1 = 1000 min^{-1}

P_1 kW	n_2 [rpm]	M_2 [kNm]	f_B [-]	iges [-]	$P_{t0.20}$ [kW]	CS [-]		kg	mm
37	6,3	56,1	1,3	158,47	102	---	**SK 11507 - 250M/6**	1535	178
	6,9	51,2	1,3	144,75	102	---			
	8,1	43,6	1,7	123,83	102	---			
	8,8	40,2	1,7	113,11	107	---			
	9,9	35,7	2,1	101,26	105	---			
	11	32,1	2,1	92,50	110	---			
	13	27,2	2,4	79,13	113	---			
	14	25,2	2,9	71,80	125	---	**SK 11407 - 250M/6**	1460	178
	15	23,6	2,8	65,59	132	---			
	5,2	68,0	1,5	193,41	125	---	**SK 12507 - 250M/6**	2195	178
	5,6	63,1	1,4	177,31	134	---			
	6,4	55,2	1,8	156,94	131	---			
	7,0	50,5	1,8	143,87	137	---			
	8,1	43,6	2,3	123,08	137	---			
	8,9	39,7	2,3	112,83	144	---			
	10	35,3	2,9	100,05	134	---			
	11	32,1	2,9	91,72	140	---			
	4,0	88,3	1,6	250,52	149	---	**SK 13507 - 250M/6**	3190	178
	4,4	80,3	1,6	229,66	156	---			
	5,2	68,0	2,0	194,04	159	---			
	5,6	63,1	2,0	177,88	163	---			
	6,3	56,1	2,5	159,35	163	---			
	6,8	52,0	2,5	146,08	171	---			
	2,5	141,3	1,8	395,26	189	---	**SK 15507 - 250M/6**	4945	178
	2,8	126,2	1,8	362,35	189	---			
	3,2	110,4	2,1	309,77	189	---			
	3,5	101,0	2,1	283,98	189	---			
	4,1	86,2	2,9	246,83	189	---			
	4,4	80,3	2,8	226,28	189	---			
45	25	17,2	1,3	39,57	69	---	**SK 7407 - 280S/6**	509	178
	28	15,3	1,3	35,97	73	---			
	32	13,4	1,6	31,36	73	---			
	35	12,3	1,6	28,53	76	---			
	41	10,5	2,2	24,30	76	---			
	45	9,6	2,1	22,09	81	---			
	52	8,3	2,6	19,26	78	---			
	57	7,5	2,6	17,52	81	---			
	23	18,7	1,5	43,57	78	---	**SK 8407 - 280S/6**	592	178
	24	17,9	1,4	41,01	82	---			
	29	14,8	1,7	34,53	82	---			
	31	13,9	1,8	32,50	85	---			
	37	11,6	2,4	26,76	85	---			
	40	10,7	2,4	25,18	91	---			
	47	9,1	2,8	21,20	88	---			
	50	8,6	2,8	19,96	91	---			
	15	28,7	1,3	64,60	100	---	**SK 9407 - 280S/6**	1025	178
	17	25,3	1,4	58,79	106	---			
	20	21,5	1,9	50,51	106	---			
	22	19,5	1,9	45,95	110	---			
	25	17,2	2,2	40,00	100	---			
	27	15,9	2,2	36,40	106	---			
	32	13,4	2,6	31,72	106	---			
	35	12,3	2,7	28,85	110	---			

** ⇨ 65

45 kW
55 kW

n_1 = 1000 min^{-1}

P_1 kW	n_2 [rpm]	M_2 [kNm]	f_B [-]	iges [-]	$P_{t0.20}$ [kW]	CS [-]		kg	mm
45	14	30,7	1,4	72,49	114	---	**SK 10407 - 280S/6**	1169	178
	15	28,7	1,4	66,23	121	---			
	18	23,9	1,9	56,70	121	---			
	19	22,6	1,9	51,78	125	---			
	22	19,5	2,2	44,89	114	---			
	24	17,9	2,3	41,01	121	---			
	28	15,3	2,6	35,59	121	---			
	31	13,9	2,7	32,50	125	---			
	8,1	53,1	1,4	123,83	102	---	**SK 11507 - 280S/6**	1535	178
	8,8	48,8	1,4	113,11	107	---			
	9,9	43,4	1,7	101,26	105	---			
	11	39,1	1,8	92,50	110	---			
	13	33,1	2,0	79,13	113	---			
	14	30,7	2,4	71,80	125	---	**SK 11407 - 280S/6**	1460	178
	15	28,7	2,3	65,59	132	---			
	18	23,9	2,6	56,11	132	---			
	20	21,5	2,7	51,25	136	---			
	6,4	67,1	1,5	156,94	131	---	**SK 12507 - 280S/6**	2195	178
	7,0	61,4	1,5	143,87	137	---			
	8,1	53,1	1,9	123,08	137	---			
	8,9	48,3	1,9	112,83	144	---			
	10	43,0	2,4	100,05	134	---			
	11	39,1	2,4	91,72	140	---			
	13	33,1	3,0	78,46	144	---			
	4,0	107,4	1,3	250,52	149	---	**SK 13507 - 280S/6**	3190	178
	4,4	97,7	1,3	229,66	156	---			
	5,2	82,6	1,7	194,04	159	---			
	5,6	76,7	1,7	177,88	163	---			
	6,3	68,2	2,1	159,35	163	---			
	6,8	63,2	2,1	146,08	171	---			
	8,1	53,1	2,6	123,42	171	---			
	8,8	48,8	2,6	113,14	175	---			
	2,5	171,9	1,4	395,26	189	---	**SK 15507 - 280S/6**	4945	178
	2,8	153,5	1,5	362,35	189	---			
	3,2	134,3	1,7	309,77	189	---			
	3,5	122,8	1,7	283,98	189	---			
	4,1	104,8	2,3	246,83	189	---			
	4,4	97,7	2,3	226,28	189	---			
	5,2	82,6	2,9	193,45	189	---			
	5,6	76,7	2,8	177,34	189	---			
55	41	12,8	1,8	24,30	76	---	**SK 7407 - 280M/6**	509	178
	45	11,7	1,8	22,09	81	---			
	52	10,1	2,1	19,26	78	---			
	57	9,2	2,1	17,52	81	---			
	29	18,1	1,4	34,53	82	---	**SK 8407 - 280M/6**	592	178
	31	16,9	1,4	32,50	85	---			
	37	14,2	1,9	26,76	85	---			
	40	13,1	2,0	25,18	91	---			
	47	11,2	2,3	21,20	88	---			
	50	10,5	2,3	19,96	91	---			

** ⇨ 📖 65

P_1 kW	n_2 [rpm]	M_2 [kNm]	f_B [-]	iges [-]	$P_{t0.20}$ [kW]	CS [-]		kg	mm
55	20	26,3	1,5	50,51	106	---	**SK 9407 - 280M/6**	1025	178
	22	23,9	1,6	45,95	110	---			
	25	21,0	1,8	40,00	100	---			
	27	19,5	1,8	36,40	106	---			
	32	16,4	2,1	31,72	106	---			
	35	15,0	2,2	28,85	110	---			
	41	12,8	2,9	24,56	110	---			
	45	11,7	3,0	22,35	117	---			
	18	29,2	1,6	56,70	121	---	**SK 10407 - 280M/6**	1169	178
	19	27,6	1,6	51,78	125	---			
	22	23,9	1,8	44,89	114	---			
	24	21,9	1,8	41,01	121	---			
	28	18,8	2,1	35,59	121	---			
	31	16,9	2,2	32,50	125	---			
	36	14,6	2,9	27,56	125	---			
	9,9	53,1	1,4	101,26	105	---	**SK 11507 - 280M/6**	1535	178
	11	47,8	1,4	92,50	110	---			
	13	40,4	1,6	79,13	113	---			
	14	37,5	1,9	71,80	125	---	**SK 11407 - 280M/6**	1460	178
	15	35,0	1,9	65,59	132	---			
	18	29,2	2,1	56,11	132	---			
	20	26,3	2,2	51,25	136	---			
	8,1	64,8	1,5	123,08	137	---	**SK 12507 - 280M/6**	2195	178
	8,9	59,0	1,5	112,83	144	---			
	10	52,5	1,9	100,05	134	---			
	11	47,8	2,0	91,72	140	---			
	13	40,4	2,4	78,46	144	---			
	14	37,5	2,6	70,94	160	---	**SK 12407 - 280M/6**	2185	178
	15	35,0	2,6	65,04	169	---			
	5,2	101,0	1,4	194,04	159	---	**SK 13507 - 280M/6**	3190	178
	5,6	93,8	1,4	177,88	163	---			
	6,3	83,4	1,7	159,35	163	---			
	6,8	77,2	1,7	146,08	171	---			
	8,1	64,8	2,1	123,42	171	---			
	8,8	59,7	2,1	113,14	175	---			
	10	52,5	2,7	100,26	171	---			
	11	47,8	2,7	91,91	179	---			
	3,2	164,1	1,4	309,77	189	---	**SK 15507 - 280M/6**	4945	178
	3,5	150,1	1,4	283,98	189	---			
	4,1	128,1	1,9	246,83	189	---			
	4,4	119,4	1,9	226,28	189	---			
	5,2	101,0	2,3	193,45	189	---			
	5,6	93,8	2,3	177,34	189	---			
	6,4	82,1	3,0	155,41	189	---			
	7,0	75,0	3,0	142,47	189	---			
75	52	13,8	1,5	19,26	78	---	**SK 7407 - 315S/6**	509	178
	57	12,6	1,5	17,52	81	---			
	37	19,4	1,4	26,76	85	---	**SK 8407 - 315S/6**	592	178
	40	17,9	1,4	25,18	91	---			
	47	15,2	1,7	21,20	88	---			

** ⇨ 65

75 kW
90 kW

n_1 = 1000 min^{-1}

P_1 kW	n_2 [rpm]	M_2 [kNm]	f_B [-]	iges [-]	$P_{t0.20}$ [kW]	CS [-]		kg	mm
75	50	14,3	1,7	19,96	91	---	**SK 8407 - 315S/6**	592	178
	25	28,7	1,3	40,00	100	---	**SK 9407 - 315S/6**	1025	178
	27	26,5	1,3	36,40	106	---			
	32	22,4	1,6	31,72	106	---			
	35	20,5	1,6	28,85	110	---			
	41	17,5	2,1	24,56	110	---			
	45	15,9	2,2	22,35	117	---			
	51	14,0	2,5	19,48	113	---			
	56	12,8	2,6	17,72	117	---			
	22	32,6	1,3	44,89	114	---	**SK 10407 - 315S/6**	1169	178
	24	29,8	1,4	41,01	121	---			
	28	25,6	1,6	35,59	121	---			
	31	23,1	1,6	32,50	125	---			
	36	19,9	2,2	27,56	125	---			
	40	17,9	2,3	25,18	133	---			
	46	15,6	2,6	21,86	129	---			
	50	14,3	2,6	19,96	133	---			
	14	51,2	1,4	71,80	125	---	**SK 11407 - 315S/6**	1460	178
	15	47,8	1,4	65,59	132	---			
	18	39,8	1,6	56,11	132	---			
	20	35,8	1,6	51,25	136	---			
	23	31,1	2,3	44,08	125	---			
	25	28,7	2,3	40,26	132	---			
	29	24,7	2,6	34,45	132	---			
	32	22,4	2,8	31,46	136	---			
	10	71,6	1,4	100,05	134	---	**SK 12507 - 315S/6**	2195	178
	11	65,1	1,4	91,72	140	---			
	13	55,1	1,8	78,46	144	---			
	14	51,2	1,9	70,94	160	---	**SK 12407 - 315S/6**	2185	178
	15	47,8	1,9	65,04	169	---			
	18	39,8	2,4	55,64	174	---			
	20	35,8	2,5	51,01	185	---			
	8,1	88,4	1,6	123,42	171	---	**SK 13507 - 315S/6**	3190	178
	8,8	81,4	1,6	113,14	175	---			
	10	71,6	2,0	100,26	171	---			
	11	65,1	2,0	91,91	179	---			
	13	55,1	2,2	77,66	184	---			
	14	51,2	2,7	71,09	205	---	**SK 13407 - 315S/6**	2970	178
	15	47,8	2,6	65,17	217	---			
	4,1	174,7	1,4	246,83	189	---	**SK 15507 - 315S/6**	4945	178
	4,4	162,8	1,4	226,28	189	---			
	5,2	137,7	1,7	193,45	189	---			
	5,6	127,9	1,7	177,34	189	---			
	6,4	111,9	2,2	155,41	189	---			
	7,0	102,3	2,2	142,47	189	---			
	8,2	87,3	2,7	121,80	189	---			
	9,0	79,6	2,7	111,66	189	---			

** ⇨ 📖 65

90 kW
110 kW

n_1 = 1000 min^{-1}

P_1 kW	n_2 [rpm]	M_2 [kNm]	f_B [-]	iges [-]	$P_{t0.20}$ [kW]	CS [-]		kg	mm
90	47	18,3	1,4	21,20	88	A/Fan*	**SK 8407 - 315M/6**	592	178
	50	17,2	1,4	19,96	91	---			
	35	24,6	1,3	28,85	110	---	**SK 9407 - 315M/6**	1025	178
	41	21,0	1,8	24,56	110	---			
	45	19,1	1,8	22,35	117	---			
	51	16,9	2,1	19,48	113	---			
	56	15,3	2,1	17,72	117	---			
	28	30,7	1,3	35,59	121	---	**SK 10407 - 315M/6**	1169	178
	31	27,7	1,4	32,50	125	---			
	36	23,9	1,8	27,56	125	---			
	40	21,5	1,9	25,18	133	---			
	46	18,7	2,1	21,86	129	---			
	50	17,2	2,2	19,96	133	---			
	23	37,4	1,9	44,08	125	---	**SK 11407 - 315M/6**	1460	178
	25	34,4	1,9	40,26	132	---			
	29	29,6	2,1	34,45	132	---			
	32	26,9	2,3	31,46	136	---			
	35	24,6	3,0	28,50	125	---			
	38	22,6	2,8	26,04	132	---			
	13	66,1	1,5	78,46	144	---	**SK 12507 - 315M/6**	2195	178
	14	61,4	1,6	70,94	160	---	**SK 12407 - 315M/6**	2185	178
	15	57,3	1,6	65,04	169	---			
	18	47,8	2,0	55,64	174	---			
	20	43,0	2,0	51,01	185	---			
	23	37,4	2,6	43,55	160	---			
	25	34,4	2,6	39,92	169	---			
	10	86,0	1,6	100,26	171	---	**SK 13507 - 315M/6**	3190	178
	11	78,1	1,7	91,91	179	---			
	13	66,1	1,9	77,66	184	---			
	14	61,4	2,2	71,09	205	---	**SK 13407 - 315M/6**	2970	178
	15	57,3	2,2	65,17	217	---			
	18	47,8	2,8	55,07	217	---			
	20	43,0	2,8	50,48	224	---			
	5,2	165,3	1,4	193,45	189	---	**SK 15507 - 315M/6**	4945	178
	5,6	153,5	1,4	177,34	189	---			
	6,4	134,3	1,8	155,41	189	---			
	7,0	122,8	1,8	142,47	189	---			
	8,2	104,8	2,2	121,80	189	---			
	9,0	95,5	2,3	111,66	189	---			
	10	86,0	2,8	98,78	189	---			
	11	78,1	2,9	90,56	189	---			
110	41	25,6	1,5	24,56	110	---	**SK 9407 - 315MA/6**	1025	178
	45	23,3	1,5	22,35	117	---			
	51	20,6	1,7	19,48	113	---			
	56	18,8	1,7	17,72	117	---			
	36	29,2	1,5	27,56	125	---	**SK 10407 - 315MA/6**	1169	178
	40	26,3	1,5	25,18	133	---			
	46	22,8	1,8	21,86	129	---			
	50	21,0	1,8	19,96	133	---			

** ⇨ 65

110 kW
132 kW

n_1 = 1000 min^{-1}

P_1 kW	n_2 [rpm]	M_2 [kNm]	f_B [-]	iges [-]	$P_{t0.20}$ [kW]	CS [-]		kg	mm
110	23	45,7	1,6	44,08	125	---	**SK 11407 - 315MA/6**	1460	178
	25	42,0	1,6	40,26	132	---			
	29	36,2	1,8	34,45	132	---			
	32	32,8	1,9	31,46	136	---			
	35	30,0	2,4	28,50	125	---			
	38	27,6	2,3	26,04	132	---			
	45	23,3	2,6	22,27	132	---			
	49	21,4	2,6	20,35	136	---			
	14	75,0	1,3	70,94	160	---	**SK 12407 - 315MA/6**	2185	178
	15	70,0	1,3	65,04	169	---			
	18	58,4	1,6	55,64	174	---			
	20	52,5	1,7	51,01	185	---			
	23	45,7	2,2	43,55	160	---			
	25	42,0	2,2	39,92	169	---			
	29	36,2	2,6	34,16	174	---			
	32	32,8	2,6	31,31	185	---			
	10	105,1	1,3	100,26	171	---	**SK 13507 - 315MA/6**	3190	178
	11	95,5	1,4	91,91	179	---			
	13	80,8	1,5	77,66	184	---			
	14	75,0	1,8	71,09	205	---	**SK 13407 - 315MA/6**	2970	178
	15	70,0	1,8	65,17	217	---			
	18	58,4	2,3	55,07	217	---			
	20	52,5	2,3	50,48	224	---			
	23	45,7	3,0	43,64	205	---			
	25	42,0	3,0	40,01	217	---			
	6,4	164,1	1,5	155,41	189	---	**SK 15507 - 315MA/6**	4945	178
	7,0	150,1	1,5	142,47	189	---			
	8,2	128,1	1,8	121,80	189	---			
	9,0	116,7	1,8	111,66	189	---			
	10	105,1	2,3	98,78	189	---			
	11	95,5	2,3	90,56	189	---			
	13	80,8	2,6	77,42	189	---			
132	51	24,7	1,4	19,48	113	A/Fan*	**SK 9407 - 315MB/6**	1025	178
	56	22,5	1,5	17,72	117	A/Fan*			
	46	27,4	1,5	21,86	129	A/Fan*	**SK 10407 - 315MB/6**	1169	178
	50	25,2	1,5	19,96	133	---			
	23	54,8	1,3	44,08	125	A/Fan	**SK 11407 - 315MB/6**	1460	178
	25	50,4	1,3	40,26	132	---			
	29	43,5	1,5	34,45	132	---			
	32	39,4	1,6	31,46	136	---			
	35	36,0	2,0	28,50	125	A/Fan			
	38	33,2	1,9	26,04	132	---			
	45	28,0	2,2	22,27	132	---			
	49	25,7	2,2	20,35	136	---			
	56	22,5	2,6	17,89	140	---			
	61	20,7	2,8	16,34	145	---			
	18	70,0	1,4	55,64	174	---	**SK 12407 - 315MB/6**	2185	178
	20	63,0	1,4	51,01	185	---			
	23	54,8	1,8	43,55	160	---			
	25	50,4	1,8	39,92	169	---			
	29	43,5	2,1	34,16	174	---			
	32	39,4	2,2	31,31	185	---			

** ⇨ 65

132 kW
160 kW

n_1 = 1000 min^{-1}

P_1 kW	n_2 [rpm]	M_2 [kNm]	f_B [-]	iges [-]	$P_{t0.20}$ [kW]	CS [-]		kg	mm
132	36	35,0	2,8	28,16	160	---	**SK 12407 - 315MB/6**	2185	178
	39	32,3	2,8	25,82	169	---			
	14	90,0	1,5	71,09	205	---	**SK 13407 - 315MB/6**	2970	178
	15	84,0	1,5	65,17	217	---			
	18	70,0	1,9	55,07	217	---			
	20	63,0	1,9	50,48	224	---			
	23	54,8	2,5	43,64	205	---			
	25	50,4	2,5	40,01	217	---			
	8,2	153,7	1,5	121,80	189	---	**SK 15507 - 315MB/6**	4945	178
	9,0	140,1	1,5	111,66	189	---			
	10	126,1	1,9	98,78	189	---			
	11	114,6	1,9	90,56	189	---			
	13	97,0	2,1	77,42	189	---			
	14	90,0	2,6	70,05	189	---	**SK 15407 - 315MB/6**	4770	178
	16	78,8	2,7	64,21	189	---			
	18	70,0	2,7	54,90	189	---			
	20	63,0	2,7	50,33	189	---			
160	32	47,8	1,3	31,46	136	A/Fan*	**SK 11407 - 315L/6**	1460	178
	35	43,7	1,7	28,50	125	A/Fan*			
	38	40,2	1,6	26,04	132	A/Fan*			
	45	34,0	1,8	22,27	132	A/Fan*			
	49	31,2	1,8	20,35	136	A/Fan*			
	56	27,3	2,1	17,89	140	A/Fan*			
	61	25,0	2,3	16,34	145	A/Fan*			
	72	21,2	2,6	13,95	145	A/Fan*			
	78	19,6	2,6	12,74	150	A/Fan*			
	23	66,4	1,5	43,55	160	---	**SK 12407 - 315L/6**	2185	178
	25	61,1	1,5	39,92	169	---			
	29	52,7	1,8	34,16	174	---			
	32	47,8	1,8	31,31	185	---			
	36	42,4	2,3	28,16	160	---			
	39	39,2	2,3	25,82	169	---			
	45	34,0	2,8	22,09	174	---			
	49	31,2	2,8	20,25	185	---			
	18	84,9	1,6	55,07	217	---	**SK 13407 - 315L/6**	2970	178
	20	76,4	1,6	50,48	224	---			
	23	66,4	2,0	43,64	205	---			
	25	61,1	2,1	40,01	217	---			
	30	50,9	2,6	33,80	217	---			
	32	47,8	2,5	30,99	224	---			
	10	152,8	1,6	98,78	189	---	**SK 15507 - 315L/6**	4945	178
	11	138,9	1,6	90,56	189	---			
	13	117,5	1,8	77,42	189	---			
	14	109,1	2,1	70,05	189	---	**SK 15407 - 315L/6**	4770	178
	16	95,5	2,3	64,21	189	---			
	18	84,9	2,2	54,90	189	---			
	20	76,4	2,2	50,33	189	---			

** ⇨ 65

200 kW
250 kW

n_1 = 1000 min^{-1}

P_1 kW	n_2 [rpm]	M_2 [kNm]	f_B [-]	iges [-]	$P_{t0.20}$ [kW]	CS [-]		kg	mm
200	35	54,6	1,3	28,50	125	B	**SK 11407 - 315LA/6**	1460	178
	45	42,4	1,5	22,27	132	B/Fan*			
	49	39,0	1,4	20,35	136	A/Fan*			
	56	34,1	1,7	17,89	140	A/Fan*			
	61	31,3	1,8	16,34	145	A/Fan*			
	72	26,5	2,1	13,95	145	A/Fan*			
	78	24,5	2,1	12,74	150	A/Fan*			
	29	65,9	1,4	34,16	174	A/Fan*	**SK 12407 - 315LA/6**	2185	178
	32	59,7	1,4	31,31	185	A/Fan*			
	36	53,1	1,9	28,16	160	A/Fan*			
	39	49,0	1,9	25,82	169	A/Fan*			
	45	42,4	2,2	22,09	174	A/Fan*			
	49	39,0	2,3	20,25	185	A/Fan*			
	56	34,1	2,7	17,81	178	A/Fan*			
	61	31,3	2,7	16,33	185	A/Fan*			
	72	26,5	3,0	13,97	185	A/Fan*			
	23	83,0	1,6	43,64	205	---	**SK 13407 - 315LA/6**	2970	178
	25	76,4	1,6	40,01	217	---			
	30	63,7	2,0	33,80	217	---			
	32	59,7	2,0	30,99	224	---			
	35	54,6	2,5	28,22	205	---			
	39	49,0	2,6	25,87	217	---			
	13	146,9	1,4	77,42	189	A/Fan*	**SK 15507 - 315LA/6**	4945	178
	14	136,4	1,7	70,05	189	A/Fan	**SK 15407 - 315LA/6**	4770	178
	16	119,4	1,8	64,21	189	A/Fan			
	18	106,1	1,8	54,90	189	A/Fan			
	20	95,5	1,8	50,33	189	A/Fan			
	23	83,0	2,8	43,00	189	A/Fan			
	25	76,4	2,8	39,42	189	A/Fan			
	30	63,7	2,9	33,70	189	A/Fan			
	32	59,7	2,8	30,89	189	A/Fan			
250	56	42,6	1,3	17,89	140	B	**SK 11407 - 315LB/6**	1460	178
	61	39,1	1,5	16,34	145	B			
	72	33,2	1,7	13,95	145	B			
	78	30,6	1,7	12,74	150	B			
	36	66,3	1,5	28,16	160	B	**SK 12407 - 315LB/6**	2185	178
	39	61,2	1,5	25,82	169	B/Fan*			
	45	53,1	1,8	22,09	174	B/Fan*			
	49	48,7	1,8	20,25	185	A/Fan*			
	56	42,6	2,2	17,81	178	B/Fan*			
	61	39,1	2,1	16,33	185	A/Fan*			
	72	33,2	2,4	13,97	185	A/Fan*			
	78	30,6	2,5	12,81	198	A/Fan*			
	23	103,8	1,3	43,64	205	A/Fan*	**SK 13407 - 315LB/6**	2970	178
	25	95,5	1,3	40,01	217	A/Fan*			
	30	79,6	1,6	33,80	217	A/Fan*			
	32	74,6	1,6	30,99	224	A/Fan*			
	35	68,2	2,0	28,22	205	A/Fan*			
	39	61,2	2,1	25,87	217	A/Fan*			
	46	51,9	2,5	21,86	217	A/Fan*			
	50	47,8	2,6	20,04	224	A/Fan*			
	57	41,9	2,9	17,45	231	A/Fan*			

** ⇨ 65

250 kW
400 kW

n_1 = 1000 min^{-1}

P_1 kW	n_2 [rpm]	M_2 [kNm]	f_B [-]	iges [-]	$P_{t0.20}$ [kW]	CS [-]		kg	mm
250	14	170,5	1,4	70,05	189	A/Fan*	**SK 15407 - 315LB/6**	4770	178
	16	149,2	1,4	64,21	189	A/Fan*			
	18	132,6	1,4	54,90	189	A/Fan*			
	20	119,4	1,4	50,33	189	A/Fan*			
	23	103,8	2,2	43,00	189	A/Fan*			
	25	95,5	2,2	39,42	189	A/Fan*			
	30	79,6	2,3	33,70	189	A/Fan*			
	32	74,6	2,3	30,89	189	A/Fan*			
315	72	41,8	1,3	13,95	145	C	**SK 11407 - 355S/6**	1460	178
	78	38,6	1,3	12,74	150	C			
	45	66,9	1,4	22,09	174	B	**SK 12407 - 355S/6**	2185	178
	49	61,4	1,4	20,25	185	B			
	56	53,7	1,7	17,81	178	B			
	61	49,3	1,7	16,33	185	B			
	72	41,8	1,9	13,97	185	B			
	78	38,6	1,9	12,81	198	B			
	35	86,0	1,6	28,22	205	B/Fan*	**SK 13407 - 355S/6**	2970	178
	39	77,1	1,6	25,87	217	B/Fan*			
	46	65,4	2,0	21,86	217	B/Fan*			
	50	60,2	2,0	20,04	224	B/Fan*			
	57	52,8	2,3	17,45	231	B/Fan*			
	63	47,8	2,4	16,00	238	B/Fan*			
	70	43,0	2,4	14,22	238	B/Fan*			
	77	39,1	2,6	13,04	247	B/Fan*			
	23	130,8	1,8	43,00	189	B	**SK 15407 - 355S/6**	4770	178
	25	120,3	1,8	39,42	189	B			
	30	100,3	1,8	33,70	189	B			
	32	94,0	1,8	30,89	189	B			
	36	83,6	2,4	27,81	189	B			
	39	77,1	2,6	25,49	189	B			
	46	65,4	2,9	21,79	189	B			
400	56	68,2	1,3	17,81	178	C	**SK 12407 - 400S/6**	2185	178
	61	62,6	1,3	16,33	185	C			
	72	53,1	1,5	13,97	185	C			
	78	49,0	1,5	12,81	198	C			
	46	83,0	1,6	21,86	217	C	**SK 13407 - 400S/6**	2970	178
	50	76,4	1,6	20,04	224	C			
	57	67,0	1,8	17,45	231	C			
	63	60,6	1,9	16,00	238	C			
	70	54,6	1,9	14,22	238	C			
	77	49,6	2,0	13,04	247	B			
	23	166,1	1,4	43,00	189	C	**SK 15407 - 400S/6**	4770	178
	25	152,8	1,4	39,42	189	C			
	30	127,3	1,4	33,70	189	C			
	32	119,4	1,4	30,89	189	C			
	36	106,1	1,9	27,81	189	C			
	39	97,9	2,0	25,49	189	C			
	46	83,0	2,3	21,79	189	C			
	50	76,4	2,4	19,98	189	C			
	57	67,0	2,6	17,56	189	C			
	62	61,6	2,6	16,10	189	C			
	73	52,3	2,9	13,76	189	C			

** ⇨ 65

500 kW
800 kW

n_1 = 1000 min^{-1}

P_1 kW	n_2 [rpm]	M_2 [kNm]	f_B [-]	iges [-]	$P_{t0.20}$ [kW]	CS [-]		kg	mm
500	57	83,8	1,5	17,45	231	D	**SK 13407 - 400M/6**	2970	178
	63	75,8	1,5	16,00	238	D			
	70	68,2	1,5	14,22	238	D			
	77	62,0	1,6	13,04	247	D			
	36	132,6	1,5	27,81	189	E	**SK 15407 - 400M/6**	4770	178
	39	122,4	1,6	25,49	189	E			
	46	103,8	1,8	21,79	189	E			
	50	95,5	1,9	19,98	189	E			
	57	83,8	2,1	17,56	189	E			
	62	77,0	2,1	16,10	189	E			
	73	65,4	2,3	13,76	189	E			
	79	60,4	2,5	12,61	189	E			
560	57	93,8	1,3	17,45	231	E	**SK 13407 - 400L/6**	2970	178
	63	84,9	1,4	16,00	238	E			
	70	76,4	1,4	14,22	238	E			
	77	69,5	1,4	13,04	247	E			
	36	148,6	1,4	27,81	189	F	**SK 15407 - 400L/6**	4770	178
	39	137,1	1,5	25,49	189	F			
	46	116,3	1,6	21,79	189	F			
	50	107,0	1,7	19,98	189	F			
	57	93,8	1,8	17,56	189	F			
	62	86,3	1,8	16,10	189	F			
	73	73,3	2,1	13,76	189	F			
	79	67,7	2,2	12,61	189	F			
630	46	130,8	1,5	21,79	189	F	**SK 15407 - 450S/6**	4770	178
	50	120,3	1,5	19,98	189	F			
	57	105,6	1,6	17,56	189	F			
	62	97,0	1,6	16,10	189	F			
	73	82,4	1,8	13,76	189	F			
	79	76,2	2,0	12,61	189	F			
710	50	135,6	1,4	19,98	189	G	**SK 15407 - 450M/6**	4770	178
	57	119,0	1,4	17,56	189	G			
	62	109,4	1,5	16,10	189	G			
	73	92,9	1,6	13,76	189	G			
	79	85,8	1,7	12,61	189	G			
800	73	104,7	1,5	13,76	189	G	**SK 15407 - 450L/6**	4770	178
	79	96,7	1,5	12,61	189	G			

** ⇨ 📖 65

4 kW
11 kW

n_1 = 1500 min^{-1}

P_1 kW	n_2 [rpm]	M_2 [kNm]	f_B [-]	iges [-]	$P_{t0.20}$ [kW]	CS [-]		kg	mm
4	3,8	10,1	2,5	398,37	48	---	**SK 7507 - 112M/4**	509	178
	4,1	9,5	2,5	362,29	49	---			
	3,4	11,3	2,6	438,67	54	---	**SK 8507 - 112M/4**	592	178
	3,6	10,7	2,6	412,85	54	---			
5,5	3,8	14,1	1,8	398,37	48	---	**SK 7507 - 132S/4**	509	178
	4,1	13,2	1,8	362,29	49	---			
	4,6	11,5	2,2	323,47	52	---			
	5,1	10,5	2,3	294,18	50	---			
	6,0	8,7	2,9	249,18	52	---			
	3,4	15,5	1,9	438,67	54	---	**SK 8507 - 132S/4**	592	178
	3,6	14,6	1,9	412,85	54	---			
	4,2	12,7	2,4	356,15	57	---			
	4,5	11,8	2,6	335,21	57	---			
	3,8	14,0	2,9	392,65	72	---	**SK 9507 - 132S/4**	1025	178
7,5	3,8	19,5	1,3	398,37	48	---	**SK 7507 - 132M/4**	509	178
	4,1	16,9	1,4	362,29	49	---			
	4,6	15,8	1,6	323,47	52	---			
	5,1	14,2	1,7	294,18	50	---			
	6,0	12,0	2,1	249,18	52	---			
	6,6	11,0	2,2	226,60	54	---			
	7,5	9,7	2,6	200,62	55	---			
	8,2	8,6	2,7	178,45	53	---			
	3,4	21,1	1,4	438,67	54	---	**SK 8507 - 132M/4**	592	178
	3,6	19,9	1,4	412,85	54	---			
	4,2	16,9	1,8	356,15	57	---			
	4,5	16,1	1,9	335,21	57	---			
	5,5	13,3	2,3	274,38	58	---			
	5,8	12,3	2,5	258,22	58	---			
	6,8	10,7	2,7	220,87	60	---			
	7,2	10,1	2,7	207,90	59	---			
	3,8	18,5	2,2	392,65	72	---	**SK 9507 - 132M/4**	1025	178
	4,2	17,3	2,3	357,22	70	---			
	4,6	15,7	2,6	324,86	72	---			
	5,1	14,3	2,8	295,57	75	---			
	3,7	19,6	2,5	402,38	80	---	**SK 10507 - 132M/4**	1169	178
	4,1	17,3	2,9	364,58	80	---			
11	6,0	18,1	1,4	249,18	52	---	**SK 7507 - 160M/4**	509	178
	6,6	16,1	1,5	226,60	54	---			
	7,5	14,0	1,8	200,62	55	---			
	8,2	12,9	1,8	178,45	53	---			
	9,2	11,5	2,2	162,86	54	---			
	10	10,5	2,3	148,13	54	---			
	12	8,8	2,5	125,47	56	---			
	13	8,0	2,5	114,10	58	---			
	4,5	23,5	1,3	335,21	57	---	**SK 8507 - 160M/4**	592	178
	5,5	19,1	1,6	274,38	58	---			
	5,8	18,1	1,7	258,22	58	---			
	6,8	15,2	1,9	220,87	60	---			
	7,2	14,4	1,9	207,90	59	---			
	8,4	12,7	2,4	179,35	60	---			

** ⇨ 65

11 kW
15 kW

n_1 = 1500 min^{-1}

P_1 kW	n_2 [rpm]	M_2 [kNm]	f_B [-]	iges [-]	$P_{t0.20}$ [kW]	CS [-]		kg	mm
11	8,9	11,9	2,6	168,79	60	---	**SK 8507 - 160M/4**	592	178
	11	9,6	2,8	138,15	63	---			
	12	8,7	2,9	130,05	63	---			
	3,8	27,1	1,5	392,65	72	---	**SK 9507 - 160M/4**	1025	178
	4,2	24,9	1,6	357,22	70	---			
	4,6	22,7	1,8	324,86	72	---			
	5,1	21,0	1,9	295,57	75	---			
	6,0	17,8	2,3	249,83	73	---			
	6,6	16,0	2,5	227,29	75	---			
	7,5	14,2	2,9	200,99	78	---			
	3,4	31,3	1,6	440,63	78	---	**SK 10507 - 160M/4**	1169	178
	3,7	28,8	1,7	402,38	80	---			
	4,1	25,1	2,0	364,58	80	---			
	4,5	23,3	2,1	332,92	83	---			
	5,3	20,2	2,5	280,39	83	---			
	5,9	17,5	2,8	256,05	85	---			
	3,7	28,4	2,7	405,18	84	---	**SK 11507 - 160M/4**	1535	178
	4,1	26,0	2,7	370,12	86	---			
15	7,5	19,4	1,3	200,62	55	---	**SK 7507 - 160L/4**	509	178
	8,2	17,8	1,3	178,45	53	---			
	9,2	15,8	1,6	162,86	54	---			
	10	14,2	1,7	148,13	54	---			
	12	11,6	1,9	125,47	56	---			
	13	11,2	1,8	114,10	58	---			
	14	10,1	2,5	103,66	69	---	**SK 7407 - 160L/4**	509	178
	16	9,0	2,6	94,30	73	---			
	6,8	20,6	1,4	220,87	60	---	**SK 8507 - 160L/4**	592	178
	7,2	19,5	1,4	207,90	59	---			
	8,4	16,9	1,8	179,35	60	---			
	8,9	16,3	1,9	168,79	60	---			
	11	12,8	2,1	138,15	63	---			
	12	12,0	2,1	130,05	63	---			
	13	10,9	2,8	114,14	78	---	**SK 8407 - 160L/4**	592	178
	14	10,1	2,9	107,43	82	---			
	4,6	31,4	1,3	324,86	72	---	**SK 9507 - 160L/4**	1025	178
	5,1	28,5	1,4	295,57	75	---			
	6,0	24,1	1,7	249,83	73	---			
	6,6	22,2	1,8	227,29	75	---			
	7,5	18,7	2,2	200,99	78	---			
	8,2	17,3	2,3	178,86	80	---			
	9,0	15,9	2,6	166,30	76	---			
	9,9	14,3	2,8	151,28	78	---			
	4,1	35,9	1,4	364,58	80	---	**SK 10507 - 160L/4**	1169	178
	4,5	32,6	1,5	332,92	83	---			
	5,3	26,6	1,9	280,39	83	---			
	5,9	24,5	2,0	256,05	85	---			
	6,6	21,7	2,3	225,57	85	---			
	7,3	19,8	2,3	205,98	89	---			
	8,0	18,2	2,8	186,63	87	---			

** ⇨ 📖 65

15 kW
18,5 kW

n_1 = 1500 min^{-1}

P_1 kW	n_2 [rpm]	M_2 [kNm]	f_B [-]	iges [-]	$P_{t0.20}$ [kW]	CS [-]		kg	mm
15	3,7	38,4	2,0	405,18	84	---	**SK 11507 - 160L/4**	1535	178
	4,1	35,1	2,0	370,12	86	---			
	4,7	30,3	2,2	316,62	87	---			
	5,2	27,8	2,3	289,22	91	---			
	3,7	38,4	2,7	400,33	108	---	**SK 12507 - 160L/4**	2195	178
	4,1	35,2	2,7	366,99	112	---			
18,5	9,2	19,5	1,3	162,86	54	---	**SK 7507 - 180M/4**	509	178
	10	17,3	1,4	148,13	54	---			
	12	14,7	1,5	125,47	56	---			
	13	13,4	1,5	114,10	58	---			
	14	12,7	2,0	103,66	69	---	**SK 7407 - 180M/4**	509	178
	16	11,1	2,1	94,30	73	---			
	19	9,3	2,6	80,67	73	---			
	20	8,8	2,5	73,39	76	---			
	26	6,8	3,0	58,09	73	---			
	8,4	20,3	1,5	179,35	60	---	**SK 8507 - 180M/4**	592	178
	8,9	19,4	1,6	168,79	60	---			
	11	15,8	1,7	138,15	63	---			
	12	14,9	1,7	130,05	63	---			
	13	13,9	2,2	114,14	78	---	**SK 8407 - 180M/4**	592	178
	14	12,7	2,3	107,43	82	---			
	17	10,5	2,8	88,85	82	---			
	18	9,8	2,8	83,62	85	---			
	6,0	29,3	1,4	249,83	73	---	**SK 9507 - 180M/4**	1025	178
	6,6	26,6	1,5	227,29	75	---			
	7,5	24,2	1,7	200,99	78	---			
	8,2	21,0	1,9	178,86	80	---			
	9,0	19,7	2,1	166,30	76	---			
	9,9	18,1	2,2	151,28	78	---			
	12	14,9	2,8	127,88	78	---			
	13	13,8	2,9	116,35	82	---			
	5,3	33,7	1,5	280,39	83	---	**SK 10507 - 180M/4**	1169	178
	5,9	30,6	1,6	256,05	85	---			
	6,6	26,3	1,9	225,57	85	---			
	7,3	24,0	1,9	205,98	89	---			
	8,0	22,2	2,3	186,63	87	---			
	8,8	20,4	2,4	170,43	89	---			
	3,7	48,0	1,6	405,18	84	---	**SK 11507 - 180M/4**	1535	178
	4,1	43,9	1,6	370,12	86	---			
	4,7	37,1	1,8	316,62	87	---			
	5,2	33,7	1,9	289,22	91	---			
	6,0	29,3	2,6	249,61	93	---			
	6,6	26,7	2,6	228,01	95	---			
	3,7	47,2	2,2	400,33	108	---	**SK 12507 - 180M/4**	2195	178
	4,1	43,2	2,2	366,99	112	---			
	4,8	36,9	2,7	313,96	112	---			
	5,2	33,8	2,7	287,82	116	---			

** ⇨ 65

22 kW

n_1 = 1500 min^{-1}

P_1 kW	n_2 [rpm]	M_2 [kNm]	f_B [-]	iges [-]	$P_{t0.20}$ [kW]	CS [-]		kg	mm
22	14	14,9	1,7	103,66	69	---	**SK 7407 - 180L/4**	509	178
	16	12,9	1,8	94,30	73	---			
	19	11,0	2,2	80,67	73	---			
	20	10,5	2,1	73,39	76	---			
	23	9,0	2,5	63,90	69	---			
	26	8,2	2,5	58,09	73	---			
	8,9	23,8	1,3	168,79	60	---	**SK 8507 - 180L/4**	592	178
	11	19,2	1,4	138,15	63	---			
	12	18,1	1,4	130,05	63	---			
	13	16,1	1,9	114,14	78	---	**SK 8407 - 180L/4**	592	178
	14	15,4	1,9	107,43	82	---			
	17	12,2	2,4	88,85	82	---			
	18	11,5	2,4	83,62	85	---			
	21	9,9	2,8	70,36	78	---			
	23	9,3	2,8	66,23	82	---			
	7,5	27,5	1,5	200,99	78	---	**SK 9507 - 180L/4**	1025	178
	8,2	24,9	1,6	178,86	80	---			
	9,0	23,0	1,8	166,30	76	---			
	9,9	21,0	1,9	151,28	78	---			
	12	17,3	2,4	127,88	78	---			
	13	16,0	2,5	116,35	82	---			
	14	15,0	2,8	104,85	100	---	**SK 9407 - 180L/4**	1025	178
	16	13,3	3,0	95,36	106	---			
	5,9	35,0	1,4	256,05	85	---	**SK 10507 - 180L/4**	1169	178
	6,6	31,2	1,6	225,57	85	---			
	7,3	28,5	1,6	205,98	89	---			
	8,0	26,8	1,9	186,63	87	---			
	8,8	23,3	2,1	170,43	89	---			
	10	21,4	2,4	143,51	89	---			
	11	18,8	2,6	131,07	93	---			
	13	16,2	3,0	117,65	114	---	**SK 10407 - 180L/4**	1169	178
	14	14,9	3,0	107,43	121	---			
	3,7	54,9	1,4	405,18	84	---	**SK 11507 - 180L/4**	1535	178
	4,1	50,1	1,4	370,12	86	---			
	4,7	44,5	1,5	316,62	87	---			
	5,2	40,0	1,6	289,22	91	---			
	6,0	34,6	2,2	249,61	93	---			
	6,6	31,6	2,2	228,01	95	---			
	7,7	27,1	2,7	195,05	93	---			
	8,4	24,7	2,7	178,17	97	---			
	3,7	57,7	1,8	400,33	108	---	**SK 12507 - 180L/4**	2195	178
	4,1	50,1	1,9	366,99	112	---			
	4,8	43,3	2,3	313,96	112	---			
	5,2	39,7	2,3	287,82	116	---			
	6,1	34,3	3,0	246,62	119	---			
	6,6	31,4	3,0	226,08	124	---			
	3,7	55,8	2,6	401,17	134	---	**SK 13507 - 180L/4**	3190	178
	4,1	51,2	2,6	367,77	139	---			

** ⇨ 65

30 kW

n_1 = 1500 min^{-1}

P_1 kW	n_2 [rpm]	M_2 [kNm]	f_B [-]	iges [-]	$P_{t0.20}$ [kW]	CS [-]		kg	mm
30	19	15,1	1,6	80,67	73	---	**SK 7407 - 200L/4**	509	178
	20	14,7	1,5	73,39	76	---			
	23	12,6	1,8	63,90	69	---			
	26	10,8	1,9	58,09	73	---			
	30	9,7	2,5	49,96	73	---			
	33	8,8	2,5	45,45	76	---			
	38	7,5	3,0	39,57	69	---			
	42	6,8	3,0	35,97	73	---			
	13	21,8	1,4	114,14	78	---	**SK 8407 - 200L/4**	592	178
	14	20,9	1,4	107,43	82	---			
	17	17,2	1,7	88,85	82	---			
	18	16,2	1,7	83,62	85	---			
	21	13,8	2,0	70,36	78	---			
	23	12,3	2,1	66,23	82	---			
	27	10,5	2,8	55,02	82	---			
	29	9,8	2,8	51,78	85	---			
	9,0	31,8	1,3	166,30	76	---	**SK 9507 - 200L/4**	1025	178
	9,9	28,5	1,4	151,28	78	---			
	12	24,5	1,7	127,88	78	---			
	13	22,2	1,8	116,35	82	---			
	14	21,0	2,0	104,85	100	---	**SK 9407 - 200L/4**	1025	178
	16	18,1	2,2	95,36	106	---			
	18	15,9	2,5	81,57	106	---			
	20	14,3	2,6	74,21	110	---			
	8,0	36,4	1,4	186,63	87	---	**SK 10507 - 200L/4**	1169	178
	8,8	32,7	1,5	170,43	89	---			
	10	28,5	1,8	143,51	89	---			
	11	25,8	1,9	131,07	93	---			
	13	22,0	2,2	117,65	114	---	**SK 10407 - 200L/4**	1169	178
	14	20,4	2,2	107,43	121	---			
	16	17,6	2,6	91,55	121	---			
	18	15,9	2,7	83,62	125	---			
	6,0	47,6	1,6	249,61	93	---	**SK 11507 - 200L/4**	1535	178
	6,6	43,4	1,6	228,01	95	---			
	7,7	36,6	2,0	195,05	93	---			
	8,4	33,4	2,0	178,17	97	---			
	9,5	29,8	2,5	158,47	101	---			
	10	28,7	2,4	144,75	101	---			
	3,7	79,8	1,3	400,33	108	---	**SK 12507 - 200L/4**	2195	178
	4,1	67,9	1,4	366,99	112	---			
	4,8	58,5	1,7	313,96	112	---			
	5,2	53,6	1,7	287,82	116	---			
	6,1	46,7	2,2	246,62	119	---			
	6,6	42,8	2,2	226,08	124	---			
	7,8	36,7	2,7	193,41	124	---			
	8,5	33,7	2,7	177,31	133	---			
	3,7	76,4	1,9	401,17	134	---	**SK 13507 - 200L/4**	3190	178
	4,1	70,0	1,9	367,77	139	---			
	4,8	60,5	2,2	310,73	148	---			
	5,3	53,0	2,3	284,85	148	---			

** ⇨ 65

37 kW

n_1 = 1500 min^{-1}

P_1 kW	n_2 [rpm]	M_2 [kNm]	f_B [-]	iges [-]	$P_{t0.20}$ [kW]	CS [-]		kg	mm
37	23	15,1	1,5	63,90	69	---	**SK 7407 - 225S/4**	509	178
	26	13,7	1,5	58,09	73	---			
	30	11,5	2,1	49,96	73	---			
	33	10,5	2,1	45,45	76	---			
	38	9,4	2,4	39,57	69	---			
	42	8,5	2,4	35,97	73	---			
	48	7,3	2,9	31,36	73	---			
	53	6,7	2,9	28,53	76	---			
	17	20,9	1,4	88,85	82	---	**SK 8407 - 225S/4**	592	178
	18	19,6	1,4	83,62	85	---			
	21	17,3	1,6	70,36	78	---			
	23	15,2	1,7	66,23	82	---			
	27	13,3	2,2	55,02	82	---			
	29	12,0	2,3	51,78	85	---			
	34	10,2	2,7	43,57	78	---			
	37	9,6	2,7	41,01	82	---			
	12	29,7	1,4	127,88	78	---	**SK 9507 - 225S/4**	1025	178
	13	26,6	1,5	116,35	82	---			
	14	24,6	1,7	104,85	100	---	**SK 9407 - 225S/4**	1025	178
	16	22,2	1,8	95,36	106	---			
	18	19,9	2,0	81,57	106	---			
	20	17,8	2,1	74,21	110	---			
	23	15,5	2,4	64,60	100	---			
	26	13,5	2,6	58,79	106	---			
	10	34,2	1,5	143,51	89	---	**SK 10507 - 225S/4**	1169	178
	11	32,7	1,5	131,07	93	---			
	13	26,9	1,8	117,65	114	---	**SK 10407 - 225S/4**	1169	178
	14	24,9	1,8	107,43	121	---			
	16	21,8	2,1	91,55	121	---			
	18	19,5	2,2	83,62	125	---			
	21	17,1	2,5	72,49	114	---			
	23	15,5	2,6	66,23	121	---			
	7,7	45,7	1,6	195,05	93	---	**SK 11507 - 225S/4**	1535	178
	8,4	41,8	1,6	178,17	97	---			
	9,5	37,2	2,0	158,47	101	---			
	10	36,3	1,9	144,75	101	---			
	12	29,0	2,5	123,83	101	---			
	13	27,6	2,4	113,11	106	---			
	4,8	71,1	1,4	313,96	112	---	**SK 12507 - 225S/4**	2195	178
	5,2	70,2	1,3	287,82	116	---			
	6,1	57,1	1,8	246,62	119	---			
	6,6	52,3	1,8	226,08	124	---			
	7,8	45,1	2,2	193,41	124	---			
	8,5	41,3	2,2	177,31	133	---			
	9,6	36,4	2,8	156,94	130	---			
	10	35,9	2,6	143,87	136	---			
	3,7	96,7	1,5	401,17	134	---	**SK 13507 - 225S/4**	3190	178
	4,1	88,7	1,5	367,77	139	---			
	4,8	73,9	1,8	310,73	148	---			
	5,3	67,8	1,8	284,85	148	---			
	6,0	59,9	2,4	250,52	148	---			
	6,5	54,9	2,4	229,66	154	---			

** ⇨ 📖 65

37 kW
45 kW

n_1 = 1500 min^{-1}

P_1 kW	n_2 [rpm]	M_2 [kNm]	f_B [-]	iges [-]	$P_{t0.20}$ [kW]	CS [-]		kg	mm
37	3,8	91,9	2,7	395,26	191	---	**SK 15507 - 225S/4**	4945	178
	4,1	87,5	2,6	362,35	203	---			
45	30	14,2	1,7	49,96	73	---	**SK 7407 - 225M/4**	509	178
	33	12,9	1,7	45,45	76	---			
	38	11,3	2,0	39,57	69	---			
	42	10,3	2,0	35,97	73	---			
	48	8,8	2,4	31,36	73	---			
	53	8,0	2,4	28,53	76	---			
	21	21,2	1,3	70,36	78	---	**SK 8407 - 225M/4**	592	178
	23	18,5	1,4	66,23	82	---			
	27	16,3	1,8	55,02	82	---			
	29	14,5	1,9	51,78	85	---			
	34	12,5	2,2	43,57	78	---			
	37	11,8	2,2	41,01	82	---			
	43	10,0	2,6	34,53	82	---			
	46	9,4	2,6	32,50	85	---			
	14	29,9	1,4	104,85	100	---	**SK 9407 - 225M/4**	1025	178
	16	26,6	1,5	95,36	106	---			
	18	23,4	1,7	81,57	106	---			
	20	21,9	1,7	74,21	110	---			
	23	18,7	2,0	64,60	100	---			
	26	16,7	2,1	58,79	106	---			
	30	14,2	2,8	50,51	106	---			
	33	12,9	2,9	45,95	110	---			
	11	37,7	1,3	131,07	93	---	**SK 10507 - 225M/4**	1169	178
	13	32,3	1,5	117,65	114	---	**SK 10407 - 225M/4**	1169	178
	14	29,9	1,5	107,43	121	---			
	16	26,9	1,7	91,55	121	---			
	18	23,9	1,8	83,62	125	---			
	21	20,4	2,1	72,49	114	---			
	23	18,4	2,2	66,23	121	---			
	26	16,3	2,8	56,70	121	---			
	29	14,8	2,9	51,78	125	---			
	7,7	56,2	1,3	195,05	93	---	**SK 11507 - 225M/4**	1535	178
	8,4	51,4	1,3	178,17	97	---			
	9,5	46,5	1,6	158,47	101	---			
	10	43,1	1,6	144,75	101	---			
	12	36,2	2,0	123,83	101	---			
	13	33,2	2,0	113,11	106	---			
	15	28,8	2,6	101,26	104	---			
	16	26,4	2,6	92,50	109	---			
	19	22,6	2,9	79,13	112	---			
	6,1	68,5	1,5	246,62	119	---	**SK 12507 - 225M/4**	2195	178
	6,6	67,3	1,4	226,08	124	---			
	7,8	55,1	1,8	193,41	124	---			
	8,5	50,5	1,8	177,31	133	---			
	9,6	44,3	2,3	156,94	130	---			
	10	42,4	2,2	143,87	136	---			
	12	36,4	2,7	123,08	136	---			
	13	33,5	2,7	112,83	143	---			
	4,8	88,7	1,5	310,73	148	---	**SK 13507 - 225M/4**	3190	178

** ⇨ 65

45 kW
55 kW

n_1 = 1500 min^{-1}

P_1 kW	n_2 [rpm]	M_2 [kNm]	f_B [-]	iges [-]	$P_{t0.20}$ [kW]	CS [-]		kg	mm
45	5,3	81,3	1,5	284,85	148	---	**SK 13507 - 225M/4**	3190	178
	6,0	71,9	2,0	250,52	148	---			
	6,5	65,9	2,0	229,66	154	---			
	7,7	55,4	2,5	194,04	158	---			
	8,4	50,8	2,5	177,88	161	---			
	3,8	112,8	2,2	395,26	191	---	**SK 15507 - 225M/4**	4945	178
	4,1	103,4	2,2	362,35	203	---			
	4,8	90,0	2,6	309,77	199	---			
	5,3	82,5	2,6	283,98	203	---			
55	30	17,3	1,4	49,96	73	---	**SK 7407 - 250M/4**	509	178
	33	15,7	1,4	45,45	76	---			
	38	14,1	1,6	39,57	69	---			
	42	12,8	1,6	35,97	73	---			
	48	11,2	1,9	31,36	73	---			
	53	10,2	1,9	28,53	76	---			
	62	8,4	2,7	24,30	76	---			
	68	7,6	2,7	22,09	81	---			
	27	19,5	1,5	55,02	82	---	**SK 8407 - 250M/4**	592	178
	29	18,3	1,5	51,78	85	---			
	34	15,3	1,8	43,57	78	---			
	37	14,4	1,8	41,01	82	---			
	43	12,3	2,1	34,53	82	---			
	46	11,6	2,1	32,50	85	---			
	56	9,5	2,9	26,76	85	---			
	60	8,6	3,0	25,18	91	---			
	18	28,4	1,4	81,57	106	---	**SK 9407 - 250M/4**	1025	178
	20	26,6	1,4	74,21	110	---			
	23	23,3	1,6	64,60	100	---			
	26	20,6	1,7	58,79	106	---			
	30	17,3	2,3	50,51	106	---			
	33	16,2	2,3	45,95	110	---			
	38	13,8	2,7	40,00	100	---			
	41	13,0	2,7	36,40	106	---			
	16	32,6	1,4	91,55	121	---	**SK 10407 - 250M/4**	1169	178
	18	28,7	1,5	83,62	125	---			
	21	25,2	1,7	72,49	114	---			
	23	22,4	1,8	66,23	121	---			
	26	19,9	2,3	56,70	121	---			
	29	17,9	2,4	51,78	125	---			
	33	15,9	2,7	44,89	114	---			
	37	14,4	2,8	41,01	121	---			
	9,5	57,2	1,3	158,47	101	---	**SK 11507 - 250M/4**	1535	178
	10	53,0	1,3	144,75	101	---			
	12	42,6	1,7	123,83	101	---			
	13	41,4	1,6	113,11	106	---			
	15	35,7	2,1	101,26	104	---			
	16	32,7	2,1	92,50	109	---			
	19	27,3	2,4	79,13	112	---			
	21	25,1	2,9	71,80	124	---	**SK 11407 - 250M/4**	1460	178
	23	22,8	2,9	65,59	131	---			

** ⇨ 📖 65

55 kW
75 kW

n_1 = 1500 min^{-1}

P_1 kW	n_2 [rpm]	M_2 [kNm]	f_B [-]	iges [-]	$P_{t0.20}$ [kW]	CS [-]		kg	mm
55	7,8	66,1	1,5	193,41	124	---	**SK 12507 - 250M/4**	2195	178
	8,5	60,6	1,5	177,31	133	---			
	9,6	53,6	1,9	156,94	130	---			
	10	51,8	1,8	143,87	136	---			
	12	44,7	2,2	123,08	136	---			
	13	41,1	2,2	112,83	143	---			
	15	35,0	2,9	100,05	133	---			
	16	33,3	2,8	91,72	139	---			
	6,0	89,9	1,6	250,52	148	---	**SK 13507 - 250M/4**	3190	178
	6,5	82,4	1,6	229,66	154	---			
	7,7	69,2	2,0	194,04	158	---			
	8,4	63,5	2,0	177,88	161	---			
	9,4	54,8	2,6	159,35	161	---			
	10	52,2	2,5	146,08	169	---			
	3,8	137,8	1,8	395,26	191	---	**SK 15507 - 250M/4**	4945	178
	4,1	126,3	1,8	362,35	203	---			
	4,8	111,5	2,1	309,77	199	---			
	5,3	97,5	2,2	283,98	203	---			
	6,1	84,7	2,9	246,83	207	---			
	6,6	80,5	2,8	226,28	216	---			
75	48	15,1	1,4	31,36	73	A/Fan*	**SK 7407 - 280S/4**	509	178
	53	13,8	1,4	28,53	76	---			
	62	11,3	2,0	24,30	76	---			
	68	10,8	1,9	22,09	81	---			
	78	9,2	2,3	19,26	78	---			
	86	8,4	2,3	17,52	81	---			
	34	21,2	1,3	43,57	78	---	**SK 8407 - 280S/4**	592	178
	37	19,9	1,3	41,01	82	---			
	43	16,2	1,6	34,53	82	---			
	46	15,3	1,6	32,50	85	---			
	56	12,5	2,2	26,76	85	---			
	60	11,8	2,2	25,18	91	---			
	71	10,0	2,6	21,20	88	---			
	75	9,4	2,6	19,96	91	---			
	30	23,4	1,7	50,51	106	---	**SK 9407 - 280S/4**	1025	178
	33	21,9	1,7	45,95	110	---			
	38	18,7	2,0	40,00	100	---			
	41	17,5	2,0	36,40	106	---			
	47	15,2	2,3	31,72	106	---			
	52	13,7	2,4	28,85	110	---			
	26	26,9	1,7	56,70	121	---	**SK 10407 - 280S/4**	1169	178
	29	25,3	1,7	51,78	125	---			
	33	21,4	2,0	44,89	114	---			
	37	19,2	2,1	41,01	121	---			
	42	16,7	2,4	35,59	121	---			
	46	15,8	2,4	32,50	125	---			
	15	46,8	1,6	101,26	104	---	**SK 11507 - 280S/4**	1535	178
	16	45,8	1,5	92,50	109	---			
	19	38,5	1,7	79,13	112	---			

** ⇨ 65

75 kW
90 kW

n_1 = 1500 min^{-1}

P_1 kW	n_2 [rpm]	M_2 [kNm]	f_B [-]	iges [-]	$P_{t0.20}$ [kW]	CS [-]		kg	mm
75	21	34,6	2,1	71,80	124	---	**SK 11407 - 280S/4**	1460	178
	23	31,4	2,1	65,59	131	---			
	27	27,0	2,3	56,11	131	---			
	29	24,8	2,3	51,25	135	---			
	9,6	72,7	1,4	156,94	130	---	**SK 12507 - 280S/4**	2195	178
	10	71,8	1,3	143,87	136	---			
	12	61,4	1,6	123,08	136	---			
	13	56,5	1,6	112,83	143	---			
	15	48,3	2,1	100,05	133	---			
	16	44,4	2,1	91,72	139	---			
	19	37,8	2,6	78,46	143	---			
	21	33,9	2,9	70,94	158	---	**SK 12407 - 280S/4**	2185	178
	23	31,4	2,9	65,04	168	---			
	7,7	92,3	1,5	194,04	158	---	**SK 13507 - 280S/4**	3190	178
	8,4	84,6	1,5	177,88	161	---			
	9,4	75,0	1,9	159,35	161	---			
	10	72,6	1,8	146,08	169	---			
	12	59,7	2,3	123,42	169	---			
	13	54,9	2,3	113,14	173	---			
	15	47,2	3,0	100,26	169	---			
	16	45,0	2,9	91,91	178	---			
	3,8	190,8	1,3	395,26	191	---	**SK 15507 - 280S/4**	4945	178
	4,1	174,9	1,3	362,35	203	---			
	4,8	146,3	1,6	309,77	199	---			
	5,3	134,1	1,6	283,98	203	---			
	6,1	117,0	2,1	246,83	207	---			
	6,6	107,3	2,1	226,28	216	---			
	7,8	90,6	2,6	193,45	221	---			
	8,5	83,1	2,6	177,34	232	---			
90	62	14,1	1,6	24,30	76	A/Fan*	**SK 7407 - 280M/4**	509	178
	68	12,8	1,6	22,09	81	A/Fan*			
	78	11,2	1,9	19,26	78	A/Fan*			
	86	10,2	1,9	17,52	81	A/Fan*			
	43	19,9	1,3	34,53	82	A/Fan*	**SK 8407 - 280M/4**	592	178
	46	18,8	1,3	32,50	85	A/Fan*			
	56	15,3	1,8	26,76	85	A/Fan*			
	60	14,4	1,8	25,18	91	---			
	71	12,3	2,1	21,20	88	A/Fan*			
	75	11,6	2,1	19,96	91	---			
	30	28,4	1,4	50,51	106	---	**SK 9407 - 280M/4**	1025	178
	33	26,6	1,4	45,95	110	---			
	38	23,3	1,6	40,00	100	---			
	41	20,6	1,7	36,40	106	---			
	47	18,4	1,9	31,72	106	---			
	52	16,4	2,0	28,85	110	---			
	61	14,3	2,6	24,56	110	---			
	67	13,0	2,7	22,35	117	---			
	26	32,6	1,4	56,70	121	---	**SK 10407 - 280M/4**	1169	178
	29	28,7	1,5	51,78	125	---			
	33	26,8	1,6	44,89	114	---			
	37	23,8	1,7	41,01	121	---			
	42	20,1	2,0	35,59	121	---			

** ⇨ 65

90 kW
110 kW

n_1 = 1500 min^{-1}

P_1 kW	n_2 [rpm]	M_2 [kNm]	f_B [-]	iges [-]	$P_{t0.20}$ [kW]	CS [-]		kg	mm
90	46	18,9	2,0	32,50	125	---	**SK 10407 - 280M/4**	1169	178
	54	15,9	2,7	27,56	125	---			
	60	14,4	2,8	25,18	133	---			
	19	46,7	1,4	79,13	112	---	**SK 11507 - 280M/4**	1535	178
	21	40,4	1,8	71,80	124	---	**SK 11407 - 280M/4**	1460	178
	23	36,7	1,8	65,59	131	---			
	27	32,6	1,9	56,11	131	---			
	29	30,0	1,9	51,25	135	---			
	34	25,0	2,9	44,08	124	---			
	37	23,6	2,8	40,26	131	---			
	12	70,2	1,4	123,08	136	---	**SK 12507 - 280M/4**	2195	178
	13	64,6	1,4	112,83	143	---			
	15	56,3	1,8	100,05	133	---			
	16	54,8	1,7	91,72	139	---			
	19	44,6	2,2	78,46	143	---			
	21	40,9	2,4	70,94	158	---	**SK 12407 - 280M/4**	2185	178
	23	37,9	2,4	65,04	168	---			
	27	31,7	3,0	55,64	173	---			
	9,4	89,1	1,6	159,35	161	---	**SK 13507 - 280M/4**	3190	178
	10	87,1	1,5	146,08	169	---			
	12	72,2	1,9	123,42	169	---			
	13	66,4	1,9	113,14	173	---			
	15	56,7	2,5	100,26	169	---			
	16	54,3	2,4	91,91	178	---			
	19	45,8	2,7	77,66	178	---			
	4,8	178,1	1,3	309,77	199	---	**SK 15507 - 280M/4**	4945	178
	5,3	165,1	1,3	283,98	203	---			
	6,1	144,5	1,7	246,83	207	---			
	6,6	132,5	1,7	226,28	216	---			
	7,8	112,2	2,1	193,45	221	---			
	8,5	102,9	2,1	177,34	232	---			
	9,7	90,2	2,7	155,41	227	---			
	11	77,0	2,9	142,47	238	---			
110	62	17,4	1,3	24,30	76	A/Fan*	**SK 7407 - 315S/4**	509	178
	68	15,8	1,3	22,09	81	A/Fan*			
	78	13,3	1,6	19,26	78	A/Fan*			
	86	12,1	1,6	17,52	81	A/Fan*			
	56	18,4	1,5	26,76	85	A/Fan*	**SK 8407 - 315S/4**	592	178
	60	17,3	1,5	25,18	91	A/Fan*			
	71	14,4	1,8	21,20	88	A/Fan*			
	75	14,4	1,7	19,96	91	A/Fan*			
	38	28,7	1,3	40,00	100	A/Fan*	**SK 9407 - 315S/4**	1025	178
	41	25,0	1,4	36,40	106	A/Fan*			
	47	21,8	1,6	31,72	106	A/Fan*			
	52	20,5	1,6	28,85	110	---			
	61	17,0	2,2	24,56	110	---			
	67	15,9	2,2	22,35	117	---			
	77	13,4	2,6	19,48	113	---			
	85	12,1	2,7	17,72	117	---			
	33	32,9	1,3	44,89	114	---	**SK 10407 - 315S/4**	1169	178

** ⇨ 65

110 kW
132 kW

n_1 = 1500 min^{-1}

P_1 kW	n_2 [rpm]	M_2 [kNm]	f_B [-]	iges [-]	$P_{t0.20}$ [kW]	CS [-]		kg	mm
110	37	28,9	1,4	41,01	121	---	**SK 10407 - 315S/4**	1169	178
	42	25,1	1,6	35,59	121	---			
	46	22,2	1,7	32,50	125	---			
	54	19,5	2,2	27,56	125	---			
	60	17,6	2,3	25,18	133	---			
	69	15,4	2,6	21,86	129	---			
	75	14,0	2,7	19,96	133	---			
	21	48,5	1,5	71,80	124	---	**SK 11407 - 315S/4**	1460	178
	23	47,1	1,4	65,59	131	---			
	27	38,8	1,6	56,11	131	---			
	29	35,6	1,6	51,25	135	---			
	34	31,6	2,3	44,08	124	---			
	37	28,7	2,3	40,26	131	---			
	44	23,6	2,7	34,45	131	---			
	48	21,7	2,9	31,46	135	---			
	15	72,4	1,4	100,05	133	---	**SK 12507 - 315S/4**	2195	178
	16	66,6	1,4	91,72	139	---			
	19	54,6	1,8	78,46	143	---			
	21	49,1	2,0	70,94	158	---	**SK 12407 - 315S/4**	2185	178
	23	45,5	2,0	65,04	168	---			
	27	39,7	2,4	55,64	173	---			
	29	36,7	2,4	51,01	184	---			
	12	85,8	1,6	123,42	169	---	**SK 13507 - 315S/4**	3190	178
	13	78,9	1,6	113,14	173	---			
	15	70,9	2,0	100,26	169	---			
	16	65,2	2,0	91,91	178	---			
	19	56,2	2,2	77,66	178	---			
	21	50,9	2,7	71,09	203	---	**SK 13407 - 315S/4**	2970	178
	23	45,0	2,8	65,17	215	---			
	6,1	175,5	1,4	246,83	207	---	**SK 15507 - 315S/4**	4945	178
	6,6	160,9	1,4	226,28	216	---			
	7,8	138,6	1,7	193,45	221	---			
	8,5	127,1	1,7	177,34	232	---			
	9,7	110,7	2,2	155,41	227	---			
	11	97,1	2,3	142,47	238	---			
	12	86,5	2,7	121,80	243	---			
	13	79,6	2,7	111,66	256	---			
132	78	16,3	1,3	19,26	78	A/Fan*	**SK 7407 - 315M/4**	509	178
	86	14,8	1,3	17,52	81	A/Fan*			
	71	17,3	1,5	21,20	88	A/Fan*	**SK 8407 - 315M/4**	592	178
	75	16,3	1,5	19,96	91	A/Fan*			
	47	26,8	1,3	31,72	106	A/Fan*	**SK 9407 - 315M/4**	1025	178
	52	23,4	1,4	28,85	110	A/Fan*			
	61	20,7	1,8	24,56	110	A/Fan*			
	67	18,4	1,9	22,35	117	A/Fan*			
	77	16,6	2,1	19,48	113	A/Fan*			
	85	14,9	2,2	17,72	117	A/Fan*			
	42	30,8	1,3	35,59	121	A/Fan*	**SK 10407 - 315M/4**	1169	178

** ⇨ 📖 65

132 kW
160 kW

n_1 = 1500 min^{-1}

P_1 kW	n_2 [rpm]	M_2 [kNm]	f_B [-]	iges [-]	$P_{t0.20}$ [kW]	CS [-]		kg	mm
132	46	27,0	1,4	32,50	125	A/Fan*	**SK 10407 - 315M/4**	1169	178
	54	23,8	1,8	27,56	125	A/Fan*			
	60	21,3	1,9	25,18	133	---			
	69	18,2	2,2	21,86	129	A/Fan*			
	75	17,2	2,2	19,96	133	---			
	27	47,7	1,3	56,11	131	---	**SK 11407 - 315M/4**	1460	178
	29	43,8	1,3	51,25	135	---			
	34	36,3	2,0	44,08	124	A/Fan			
	37	34,7	1,9	40,26	131	---			
	44	28,9	2,2	34,45	131	---			
	48	26,3	2,4	31,46	135	---			
	58	21,4	3,0	26,04	131	---			
	19	65,5	1,5	78,46	143	---	**SK 12507 - 315M/4**	2195	178
	21	61,4	1,6	70,94	158	---	**SK 12407 - 315M/4**	2185	178
	23	53,5	1,7	65,04	168	---			
	27	47,6	2,0	55,64	173	---			
	29	44,0	2,0	51,01	184	---			
	34	37,8	2,6	43,55	158	---			
	38	33,7	2,7	39,92	168	---			
	12	105,5	1,3	123,42	169	---	**SK 13507 - 315M/4**	3190	178
	13	97,1	1,3	113,14	173	---			
	15	83,4	1,7	100,26	169	---			
	16	76,7	1,7	91,91	178	---			
	19	65,1	1,9	77,66	178	---			
	21	59,7	2,3	71,09	203	---	**SK 13407 - 315M/4**	2970	178
	23	54,8	2,3	65,17	215	---			
	27	47,5	2,8	55,07	215	---			
	30	42,2	2,9	50,48	222	---			
	7,8	157,1	1,5	193,45	221	---	**SK 15507 - 315M/4**	4945	178
	8,5	144,0	1,5	177,34	232	---			
	9,7	128,2	1,9	155,41	227	---			
	11	117,5	1,9	142,47	238	---			
	12	106,2	2,2	121,80	243	---			
	13	97,7	2,2	111,66	256	---			
	15	83,6	2,9	98,78	243	---			
	17	74,3	3,0	90,56	256	---			
160	61	24,9	1,5	24,56	110	A/Fan*	**SK 9407 - 315MA/4**	1025	178
	67	23,3	1,5	22,35	117	A/Fan*			
	77	19,4	1,8	19,48	113	A/Fan*			
	85	18,2	1,8	17,72	117	A/Fan*			
	54	28,5	1,5	27,56	125	A/Fan*	**SK 10407 - 315MA/4**	1169	178
	60	25,3	1,6	25,18	133	A/Fan*			
	69	22,3	1,8	21,86	129	A/Fan*			
	75	19,9	1,9	19,96	133	A/Fan*			
	34	45,4	1,6	44,08	124	A/Fan*	**SK 11407 - 315MA/4**	1460	178
	37	41,3	1,6	40,26	131	A/Fan*			
	44	35,3	1,8	34,45	131	A/Fan*			
	48	31,5	2,0	31,46	135	A/Fan*			
	53	29,1	2,5	28,50	124	A/Fan*			
	58	26,8	2,4	26,04	131	A/Fan*			
	67	22,8	2,7	22,27	131	A/Fan*			

** ⇨ 65

160 kW
200 kW

n_1 = 1500 min^{-1}

P_1 kW	n_2 [rpm]	M_2 [kNm]	f_B [-]	iges [-]	$P_{t0.20}$ [kW]	CS [-]		kg	mm
160	74	20,9	2,7	20,35	135	A/Fan*	**SK 11407 - 315MA/4**	1460	178
	21	75,5	1,3	70,94	158	A/Fan	**SK 12407 - 315MA/4**	2185	178
	23	65,0	1,4	65,04	168	---			
	27	56,0	1,7	55,64	173	---			
	29	51,8	1,7	51,01	184	---			
	34	44,6	2,2	43,55	158	A/Fan			
	38	39,6	2,3	39,92	168	---			
	44	34,4	2,7	34,16	173	---			
	48	31,9	2,7	31,31	184	---			
	15	101,2	1,4	100,26	169	---	**SK 13507 - 315MA/4**	3190	178
	16	93,1	1,4	91,91	178	---			
	19	82,4	1,5	77,66	178	---			
	21	72,3	1,9	71,09	203	---	**SK 13407 - 315MA/4**	2970	178
	23	66,3	1,9	65,17	215	---			
	27	55,4	2,4	55,07	215	---			
	30	51,0	2,4	50,48	222	---			
	9,7	162,3	1,5	155,41	227	---	**SK 15507 - 315MA/4**	4945	178
	11	139,6	1,6	142,47	238	---			
	12	129,8	1,8	121,80	243	---			
	13	119,4	1,8	111,66	256	---			
	15	101,0	2,4	98,78	243	---			
	17	89,2	2,5	90,56	256	---			
	19	79,6	2,6	77,42	271	---			
200	77	24,9	1,4	19,48	113	B/Fan*	**SK 9407 - 315L/4**	1025	178
	85	21,9	1,5	17,72	117	B/Fan*			
	69	28,6	1,4	21,86	129	B/Fan*	**SK 10407 - 315L/4**	1169	178
	75	25,2	1,5	19,96	133	B/Fan*			
	44	42,4	1,5	34,45	131	B/Fan*	**SK 11407 - 315L/4**	1460	178
	48	39,4	1,6	31,46	135	A/Fan*			
	53	36,4	2,0	28,50	124	B/Fan*			
	58	33,8	1,9	26,04	131	B/Fan*			
	67	28,0	2,2	22,27	131	B/Fan*			
	74	25,6	2,2	20,35	135	A/Fan*			
	84	23,0	2,5	17,89	139	A/Fan*			
	92	20,7	2,8	16,34	144	A/Fan*			
	27	73,2	1,3	55,64	173	A/Fan*	**SK 12407 - 315L/4**	2185	178
	29	67,7	1,3	51,01	184	A/Fan*			
	34	57,8	1,7	43,55	158	A/Fan*			
	38	50,6	1,8	39,92	168	A/Fan*			
	44	44,3	2,1	34,16	173	A/Fan*			
	48	39,1	2,2	31,31	184	A/Fan*			
	53	36,4	2,7	28,16	158	A/Fan*			
	58	32,5	2,8	25,82	168	A/Fan*			
	21	91,5	1,5	71,09	203	---	**SK 13407 - 315L/4**	2970	178
	23	84,0	1,5	65,17	215	---			
	27	70,0	1,9	55,07	215	---			
	30	64,4	1,9	50,48	222	---			
	34	56,7	2,4	43,64	203	---			
	37	52,5	2,4	40,01	215	---			

** ⇨ 65

200 kW
315 kW

n_1 = 1500 min^{-1}

P_1 kW	n_2 [rpm]	M_2 [kNm]	f_B [-]	iges [-]	$P_{t0.20}$ [kW]	CS [-]		kg	mm
200	12	155,7	1,5	121,80	243	---	**SK 15507 - 315L/4**	4945	178
	13	143,3	1,5	111,66	256	---			
	15	127,5	1,9	98,78	243	---			
	17	111,5	2,0	90,56	256	---			
	19	98,6	2,1	77,42	271	---			
	21	89,6	2,6	70,05	286	---	**SK 15407 - 315L/4**	4770	178
	23	83,1	2,6	64,21	304	---			
	27	71,5	2,6	54,90	304	---			
	30	63,0	2,7	50,33	314	---			
250	53	45,4	1,6	28,50	124	B/Fan*	**SK 11407 - 315LA/4**	1460	178
	58	40,1	1,6	26,04	131	B/Fan*			
	67	36,2	1,7	22,27	131	B/Fan*			
	74	33,2	1,7	20,35	135	B/Fan*			
	84	28,8	2,0	17,89	139	B/Fan*			
	92	26,3	2,2	16,34	144	B/Fan*			
	108	22,2	2,5	13,95	144	B/Fan*			
	118	20,2	2,5	12,74	149	B/Fan*			
	34	70,1	1,4	43,55	158	B/Fan*	**SK 12407 - 315LA/4**	2185	178
	38	65,0	1,4	39,92	168	B/Fan*			
	44	54,7	1,7	34,16	173	B/Fan*			
	48	50,6	1,7	31,31	184	A/Fan*			
	53	44,6	2,2	28,16	158	B/Fan*			
	58	41,4	2,2	25,82	168	B/Fan*			
	68	35,3	2,7	22,09	173	B/Fan*			
	74	32,6	2,7	20,25	184	A/Fan*			
	27	88,7	1,5	55,07	215	A/Fan*	**SK 13407 - 315LA/4**	2970	178
	30	81,5	1,5	50,48	222	A/Fan*			
	34	71,6	1,9	43,64	203	A/Fan*			
	37	63,0	2,0	40,01	215	A/Fan*			
	44	54,2	2,4	33,80	215	A/Fan*			
	48	50,0	2,4	30,99	222	A/Fan*			
	15	161,5	1,5	98,78	243	A/Fan*	**SK 15507 - 315LA/4**	4945	178
	17	139,4	1,6	90,56	256	---			
	19	129,4	1,6	77,42	271	---			
	21	116,5	2,0	70,05	286	---	**SK 15407 - 315LA/4**	4770	178
	23	102,9	2,1	64,21	304	---			
	27	88,6	2,1	54,90	304	---			
	30	81,0	2,1	50,33	314	---			
315	67	44,0	1,4	22,27	131	C/Fan*	**SK 11407 - 315LB/4**	1460	178
	74	40,3	1,4	20,35	135	C/Fan*			
	84	35,9	1,6	17,89	139	C/Fan*			
	92	32,2	1,8	16,34	144	C/Fan*			
	108	27,7	2,0	13,95	144	C/Fan*			
	118	25,3	2,0	12,74	149	C/Fan*			
	44	66,4	1,4	34,16	173	B/Fan*	**SK 12407 - 315LB/4**	2185	178
	48	61,4	1,4	31,31	184	B/Fan*			
	53	57,8	1,7	28,16	158	C/Fan*			
	58	50,6	1,8	25,82	168	B/Fan*			
	68	43,3	2,2	22,09	173	B/Fan*			
	74	40,0	2,2	20,25	184	B/Fan*			
	84	35,4	2,6	17,81	178	B/Fan*			
	92	32,3	2,6	16,33	184	B/Fan*			

** ⇨ 65

315 kW
400 kW

n_1 = 1500 min^{-1}

P_1 kW	n_2 [rpm]	M_2 [kNm]	f_B [-]	iges [-]	$P_{t0.20}$ [kW]	CS [-]		kg	mm
315	107	28,3	2,8	13,97	184	B/Fan*	**SK 12407 - 315LB/4**	2185	178
	117	25,9	2,9	12,81	197	B/Fan*			
	34	90,7	1,5	43,64	203	B/Fan*	**SK 13407 - 315LB/4**	2970	178
	37	84,0	1,5	40,01	215	B/Fan*			
	44	68,4	1,9	33,80	215	B/Fan*			
	48	63,2	1,9	30,99	222	B/Fan*			
	53	57,3	2,4	28,22	203	B/Fan*			
	58	52,7	2,4	25,87	215	B/Fan*			
	69	43,3	3,0	21,86	215	B/Fan*			
	19	159,2	1,3	77,42	271	A/Fan*	**SK 15507 - 315LB/4**	4945	178
	21	145,6	1,6	70,05	286	A/Fan*	**SK 15407 - 315LB/4**	4770	178
	23	127,1	1,7	64,21	304	A/Fan*			
	27	109,4	1,7	54,90	304	A/Fan*			
	30	100,0	1,7	50,33	314	---			
	35	85,6	2,7	43,00	286	A/Fan*			
	38	78,9	2,7	39,42	304	A/Fan*			
	45	67,5	2,7	33,70	304	A/Fan*			
	49	62,2	2,7	30,89	314	---			
355	84	41,1	1,4	17,89	139	C	**SK 11407 - 355S/4**	1460	178
	92	36,2	1,6	16,34	144	C			
	108	30,8	1,8	13,95	144	C			
	118	28,1	1,8	12,74	149	C/Fan*			
	53	65,5	1,5	28,16	158	C/Fan*	**SK 12407 - 355S/4**	2185	178
	58	56,9	1,6	25,82	168	C/Fan*			
	68	50,1	1,9	22,09	173	C/Fan*			
	74	46,3	1,9	20,25	184	C/Fan*			
	84	40,0	2,3	17,81	178	C/Fan*			
	92	36,5	2,3	16,33	184	C/Fan*			
	107	31,7	2,5	13,97	184	C/Fan*			
	117	28,8	2,6	12,81	197	C/Fan*			
	34	97,1	1,4	43,64	203	B/Fan*	**SK 13407 - 355S/4**	2970	178
	37	90,0	1,4	40,01	215	B/Fan*			
	44	76,5	1,7	33,80	215	B/Fan*			
	48	70,6	1,7	30,99	222	B/Fan*			
	53	65,4	2,1	28,22	203	B/Fan*			
	58	57,5	2,2	25,87	215	B/Fan*			
	69	50,0	2,6	21,86	215	B/Fan*			
	75	45,3	2,7	20,04	222	B/Fan*			
	21	166,4	1,4	70,05	286	B/Fan*	**SK 15407 - 355S/4**	4770	178
	23	144,0	1,5	64,21	304	A/Fan*			
	27	124,0	1,5	54,90	304	A/Fan*			
	30	113,3	1,5	50,33	314	A/Fan*			
	35	96,3	2,4	43,00	286	B/Fan*			
	38	88,8	2,4	39,42	304	A/Fan*			
	45	76,0	2,4	33,70	304	A/Fan*			
	49	70,0	2,4	30,89	314	A/Fan*			
400	92	41,4	1,4	16,34	144	D	**SK 11407 - 355M/4**	1460	178
	108	34,6	1,6	13,95	144	D			
	118	31,6	1,6	12,74	149	D			

** ⇨ 65

400 kW
560 kW

n_1 = 1500 min^{-1}

P_1 kW	n_2 [rpm]	M_2 [kNm]	f_B [-]	iges [-]	$P_{t0.20}$ [kW]	CS [-]		kg	mm
400	53	70,1	1,4	28,16	158	D	**SK 12407 - 355M/4**	2185	178
	58	65,0	1,4	25,82	168	C/Fan*			
	68	56,0	1,7	22,09	173	C/Fan*			
	74	51,8	1,7	20,25	184	C/Fan*			
	84	46,0	2,0	17,81	178	C/Fan*			
	92	42,0	2,0	16,33	184	C/Fan*			
	107	36,0	2,2	13,97	184	C/Fan*			
	117	32,6	2,3	12,81	197	C/Fan*			
	44	86,7	1,5	33,80	215	C/Fan*	**SK 13407 - 355M/4**	2970	178
	48	80,0	1,5	30,99	222	C/Fan*			
	53	72,3	1,9	28,22	203	C/Fan*			
	58	66,5	1,9	25,87	215	C/Fan*			
	69	56,5	2,3	21,86	215	C/Fan*			
	75	51,0	2,4	20,04	222	C/Fan*			
	86	45,2	2,7	17,45	229	C/Fan*			
	94	40,0	2,9	16,00	237	C/Fan*			
	105	35,9	2,9	14,22	237	C/Fan*			
	21	179,2	1,3	70,05	286	B/Fan*	**SK 15407 - 355M/4**	4770	178
	23	166,2	1,3	64,21	304	B/Fan*			
	27	143,1	1,3	54,90	304	B/Fan*			
	30	130,8	1,3	50,33	314	B/Fan*			
	35	110,0	2,1	43,00	286	B/Fan*			
	38	101,4	2,1	39,42	304	B/Fan*			
	45	86,8	2,1	33,70	304	B/Fan*			
	49	76,4	2,2	30,89	314	B/Fan*			
	54	70,0	2,9	27,81	286	B/Fan*			
500	68	68,0	1,4	22,09	173	E	**SK 12407 - 355L/4**	2185	178
	74	62,9	1,4	20,25	184	E			
	84	57,5	1,6	17,81	178	E			
	92	52,5	1,6	16,33	184	E			
	107	44,1	1,8	13,97	184	E			
	117	41,7	1,8	12,81	197	E			
	53	91,6	1,5	28,22	203	E	**SK 13407 - 355L/4**	2970	178
	58	84,3	1,5	25,87	215	D/Fan*			
	69	68,4	1,9	21,86	215	D/Fan*			
	75	64,4	1,9	20,04	222	D/Fan*			
	86	55,5	2,2	17,45	229	D/Fan*			
	94	50,4	2,3	16,00	237	D/Fan*			
	105	45,2	2,3	14,22	237	D/Fan*			
	115	41,7	2,4	13,04	245	D/Fan*			
	35	135,9	1,7	43,00	286	C/Fan*	**SK 15407 - 355L/4**	4770	178
	38	125,3	1,7	39,42	304	C/Fan*			
	45	107,2	1,7	33,70	304	C/Fan*			
	49	98,8	1,7	30,89	314	C/Fan*			
	54	88,3	2,3	27,81	286	C/Fan*			
	59	79,6	2,5	25,49	304	C/Fan*			
	69	70,4	2,7	21,79	304	C/Fan*			
	75	64,1	2,9	19,98	314	C/Fan*			
560	84	65,7	1,4	17,81	178	F	**SK 12407 - 400S/4**	2185	178
	92	60,0	1,4	16,33	184	F			
	107	49,6	1,6	13,97	184	F			
	117	46,9	1,6	12,81	197	E			

** ⇨ 65

560 kW
710 kW

n_1 = 1500 min^{-1}

P_1 kW	n_2 [rpm]	M_2 [kNm]	f_B [-]	iges [-]	$P_{t0.20}$ [kW]	CS [-]		kg	mm
560	53	98,1	1,4	28,22	203	E	**SK 13407 - 400S/4**	2970	178
	58	90,3	1,4	25,87	215	E			
	69	76,5	1,7	21,86	215	E			
	75	71,9	1,7	20,04	222	E			
	86	61,0	2,0	17,45	229	E			
	94	58,0	2,0	16,00	237	E/Fan*			
	105	52,0	2,0	14,22	237	E/Fan*			
	115	45,5	2,2	13,04	245	E/Fan*			
	35	154,0	1,5	43,00	286	D/Fan*	**SK 15407 - 400S/4**	4770	178
	38	142,0	1,5	39,42	304	D/Fan*			
	45	121,5	1,5	33,70	304	D/Fan*			
	49	112,0	1,5	30,89	314	D/Fan*			
	54	101,5	2,0	27,81	286	D/Fan*			
	59	90,5	2,2	25,49	304	D/Fan*			
	69	76,0	2,5	21,79	304	D/Fan*			
	75	71,5	2,6	19,98	314	D/Fan*			
	85	63,7	2,7	17,56	325	D/Fan*			
	93	56,8	2,8	16,10	336	C/Fan*			
630	107	56,6	1,4	13,97	184	F	**SK 12407 - 400M/4**	2185	178
	117	50,0	1,5	12,81	197	F			
	69	86,7	1,5	21,86	215	F	**SK 13407 - 400M/4**	2970	178
	75	81,5	1,5	20,04	222	F			
	86	71,8	1,7	17,45	229	F			
	94	64,4	1,8	16,00	237	F			
	105	57,8	1,8	14,22	237	F			
	115	52,6	1,9	13,04	245	F			
	35	177,7	1,3	43,00	286	E/Fan*	**SK 15407 - 400M/4**	4770	178
	38	163,8	1,3	39,42	304	E/Fan*			
	45	130,2	1,4	33,70	304	E/Fan*			
	49	120,0	1,4	30,89	314	E/Fan*			
	54	112,8	1,8	27,81	286	E/Fan*			
	59	99,5	2,0	25,49	304	E/Fan*			
	69	86,4	2,2	21,79	304	E/Fan*			
	75	80,9	2,3	19,98	314	E/Fan*			
	85	71,7	2,4	17,56	325	E/Fan*			
	93	63,6	2,5	16,10	336	E/Fan*			
	109	54,3	2,8	13,76	336	E/Fan*			
	119	51,4	2,9	12,61	361	D/Fan*			
710	69	100,0	1,3	21,86	215	F	**SK 13407 - 400L/4**	2970	178
	75	87,4	1,4	20,04	222	F			
	86	81,3	1,5	17,45	229	F			
	94	72,5	1,6	16,00	237	F			
	105	65,0	1,6	14,22	237	F			
	115	58,8	1,7	13,04	245	F			
	54	126,9	1,6	27,81	286	F	**SK 15407 - 400L/4**	4770	178
	59	117,1	1,7	25,49	304	F/Fan*			
	69	100,0	1,9	21,79	304	F/Fan*			
	75	88,6	2,1	19,98	314	F/Fan*			
	85	78,2	2,2	17,56	325	F/Fan*			
	93	72,3	2,2	16,10	336	F/Fan*			
	109	63,3	2,4	13,76	336	F/Fan*			
	119	57,3	2,6	12,61	361	E/Fan*			

** ⇨ 65

800 kW
1000 kW

n_1 = 1500 min^{-1}

P_1 kW	n_2 [rpm]	M_2 [kNm]	f_B [-]	iges [-]	$P_{t0.20}$ [kW]	CS [-]		kg	mm
800	86	87,1	1,4	17,45	229	G	**SK 13407 - 450S/4**	2970	178
	94	82,9	1,4	16,00	237	G			
	105	74,3	1,4	14,22	237	G			
	115	66,7	1,5	13,04	245	G			
	54	145,0	1,4	27,81	286	G	**SK 15407 - 450S/4**	4770	178
	59	132,7	1,5	25,49	304	F			
	69	111,8	1,7	21,79	304	F			
	75	103,3	1,8	19,98	314	F			
	85	90,5	1,9	17,56	325	F			
	93	83,7	1,9	16,10	336	F/Fan*			
	109	69,1	2,2	13,76	336	F/Fan*			
	119	64,8	2,3	12,61	361	F/Fan*			
900	115	76,9	1,3	13,04	245	G	**SK 13407 - 450M/4**	2970	178
	59	142,1	1,4	25,49	304	G	**SK 15407 - 450M/4**	4770	178
	69	126,7	1,5	21,79	304	G			
	75	116,3	1,6	19,98	314	G			
	85	101,2	1,7	17,56	325	G			
	93	93,5	1,7	16,10	336	G			
	109	80,0	1,9	13,76	336	G			
	119	71,0	2,1	12,61	361	G			
1000	69	135,7	1,4	21,79	304	G	**SK 15407 - 450L/4**	4770	178
	75	124,0	1,5	19,98	314	G			
	85	114,7	1,5	17,56	325	G			
	93	106,0	1,5	16,10	336	G			
	109	89,4	1,7	13,76	336	G			
	119	78,4	1,9	12,61	361	G			

** ⇨ 65

SK ..207
SK ..307

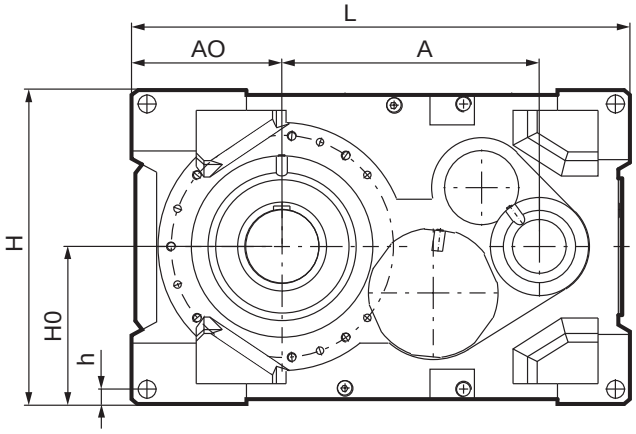

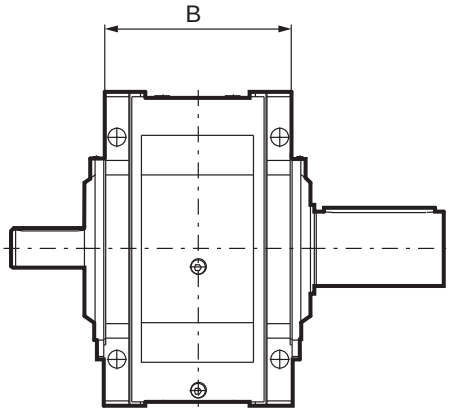

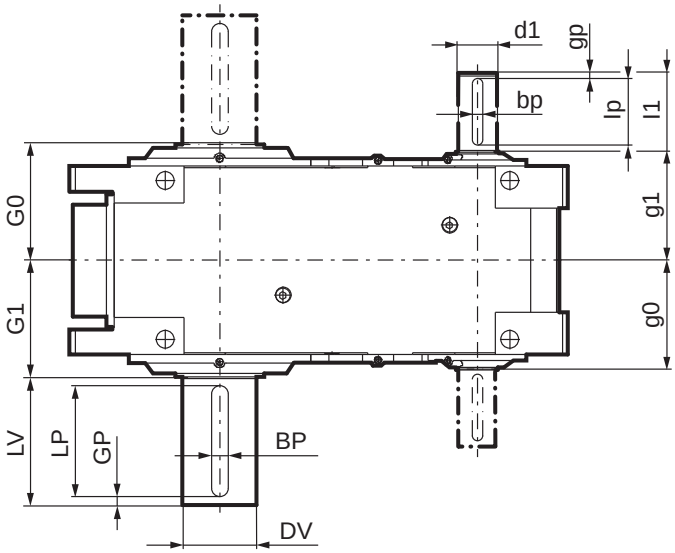

** ⇨ 65

SK ..207
SK ..307

|←→|

|←→|	L	B	H	H0	h	A	A0	g0	g1	G0	G1	DV	LV	LP	BP	GP
SK 7..07	870	350	530	265	35	440	295	175	179	189	197	ø 140	250	200	36	25
SK 8..07	925	350	590	295	35	465	325	175	179	189	197	ø 140	250	200	36	25
SK 9..07	1055	415	650	325	45	530	330	207,5	212,5	249	253	ø 160	300	260	40	20
SK 10..07	1130	415	720	360	45	560	365	207,5	212,5	249	253	ø 160	300	260	40	20
SK 11..07	1210	440	750	375	52	630	370	254	260	270	280	ø 170	300	260	40	20
SK 12..07	1345	510	850	425	57	695	405	288,5	294	305	315	ø 200	350	300	45	25
SK 13..07	1530	550	950	475	60	780	475	323	328	343	353	ø 230	410	350	50	31
SK 15..07	1800	650	1100	550	70	935	545	361	371	385	395	ø 250	410	360	56	25

	SK..207						SK..307					
|←→|	i_N	d1	l1	lp	bp	gp	i_N	d1	l1	lp	bp	gp
SK 7..07	7,1 … 25	ø 48	110	100	14	5	28 … 315	ø 48	110	100	14	5
SK 8..07	8 … 28	ø 48	110	100	14	5	31,5 … 355	ø 48	110	100	14	5
SK 9..07	7,1 … 25	ø 55	110	90	16	10	28 … 355	ø 55	110	90	16	10
SK 10..07	8 … 28	ø 55	110	90	16	10	28 … 400	ø 55	110	90	16	10
SK 11..07	5,6 ... 20	ø 80	170	140	22	15	22,4 ... 112	ø 70	140	125	20	7,5
SK 12..07	5,6 ... 20	ø 100	210	180	28	15	22,4 ... 112	ø 80	170	140	22	15
SK 13..07	5,6 ... 20	ø 110	210	180	28	15	22,4 ... 112	ø 80	170	140	22	15
SK 15..07	5,6 ... 20	ø 120	245	200	32	25	22,4 ... 45	ø 100	210	180	28	15
							50 ... 112	ø 80	170	140	22	15

** ⇨ 65

SK ..207
SK ..307
FAN

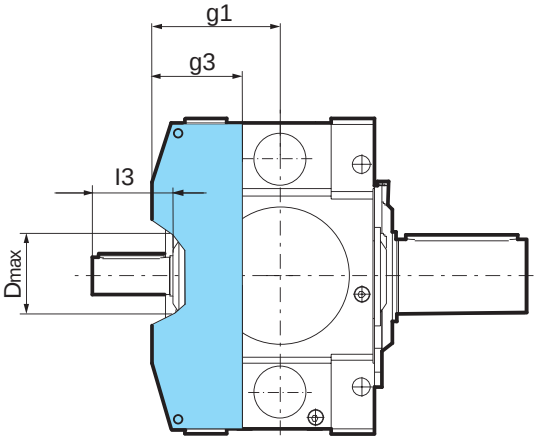

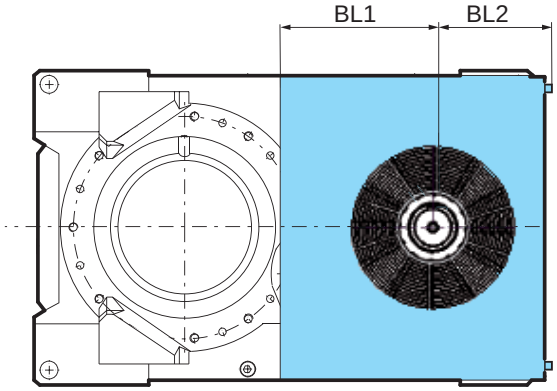

⇨ 🕮 49

FAN	i_N	BL1	BL2	g2	g3	l3	Dmax
SK 7207	**7,1 … 25**	150	147	225	120	74	ø 130
SK 7307	**28 … 355**	150	147	225	120	74	ø 130
SK 8207	**8 … 28**	150	147	257,5	120	74	ø 130
SK 8307	**31,5 … 400**	150	147	257,5	120	74	ø 130
SK 9207	**7,1 … 25**	195	195	283	132	83	ø 130
SK 9307	**28 … 355**	195	195	283	132	83	ø 130
SK 10207	**8 … 28**	195	195	338	132	83	ø 130
SK 10307	**28 … 280**	195	195	338	132	83	ø 130
SK 11207	**5,6 ... 20**	390	252	307	189	133	ø 160
SK 11307	**22,4 ... 112**	390	252	307	189	103	ø 160
SK 12207	**5,6 ... 20**	430	287	358	217	158	ø 180
SK 12307	**22,4 ... 112**	430	287	358	217	118	ø 180
SK 13207	**5,6 ... 20**	490	317	392	243	158	ø 200
SK 13307	**22,4 ... 112**	490	317	392	243	118	ø 200
SK 15207	**5,6 ... 20**	580	362	450	275	178	ø 240
SK 15307	**22,4 ... 45**	580	362	450	275	143	ø 240
SK 15307	**50 ... 112**	580	362	450	275	103	ø 240

** ⇨🕮 65

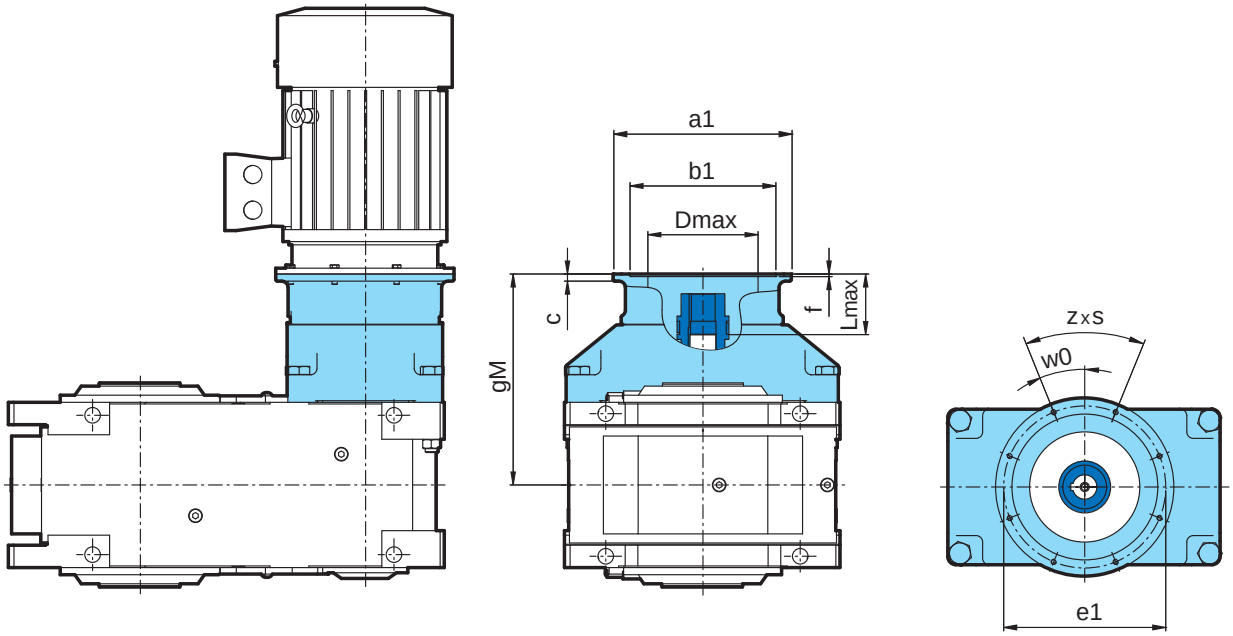

IEC			gM	a1	b1	e1	c	f	z x s	w0	Dmax	Lmax
SK 7207	IEC	100	389	250	180	215	11	4	4 x 14,5	0	160	100
		112	389	250	180	215	11	4	4 x 14,5	0	160	100
		132	409	300	230	265	12	4	4 x 14,5	0	210	120
		160	439	350	250	300	15	6,5	4 x 17,5	45	220	150
		180	439	350	250	300	15	6,5	4 x 17,5	45	220	150
		200	439	400	300	350	17	6,5	4 x 17,5	45	250	150
		225	469	450	350	400	18	6,5	8 x 17,5	22,5	250	180
		250	469	550	450	500	22	8	8 x M16	22,5	250	180
		280	469	550	450	500	22	8	8 x M16	22,5	250	180
		315	499	660	550	600	22	8	8 x 22	22,5	250	210
	TN	315	499	800	680	740	25	8	8 x 22	22,5	250	210
		355	499	900	780	840	25	8	8 x 22	22,5	250	210
SK 7307	IEC	100	389	250	180	215	11	4	4 x 14,5	0	160	100
		112	389	250	180	215	11	4	4 x 14,5	0	160	100
		132	409	300	230	265	12	4	4 x 14,5	0	210	120
		160	439	350	250	300	15	6,5	4 x 17,5	45	220	150
		180	439	350	250	300	15	6,5	4 x 17,5	45	220	150
		200	439	400	300	350	17	6,5	4 x 17,5	45	250	150
		225	469	450	350	400	18	6,5	8 x 17,5	22,5	250	180
		250	469	550	450	500	22	8	8 x M16	22,5	250	180
		280	469	550	450	500	22	8	8 x M16	22,5	250	180
		315	499	660	550	600	22	8	8 x 22	22,5	250	210
	TN	315	499	800	680	740	25	8	8 x 22	22,5	250	210
		355	499	900	780	840	25	8	8 x 22	22,5	250	210

** ⇨ 65

SK ..207
SK ..307
IEC

IEC			gM	a1	b1	e1	c	f	z x s	w0	Dmax	Lmax
SK 8207	IEC	100	389	250	180	215	11	4	4 x 14,5	0	160	100
		112	389	250	180	215	11	4	4 x 14,5	0	160	100
		132	409	300	230	265	12	4	4 x 14,5	0	210	120
		160	439	350	250	300	15	6,5	4 x 17,5	45	220	150
		180	439	350	250	300	15	6,5	4 x 17,5	45	220	150
		200	439	400	300	350	17	6,5	4 x 17,5	45	250	150
		225	469	450	350	400	18	6,5	8 x 17,5	22,5	250	180
		250	469	550	450	500	22	8	8 x M16	22,5	250	180
		280	469	550	450	500	22	8	8 x M16	22,5	250	180
		315	499	660	550	600	22	8	8 x 22	22,5	250	210
	TN	315	499	800	680	740	25	8	8 x 22	22,5	250	210
		355	499	900	780	840	25	8	8 x 22	22,5	250	210
SK 8307	IEC	100	389	250	180	215	11	4	4 x 14,5	0	160	100
		112	389	250	180	215	11	4	4 x 14,5	0	160	100
		132	409	300	230	265	12	4	4 x 14,5	0	210	120
		160	439	350	250	300	15	6,5	4 x 17,5	45	220	150
		180	439	350	250	300	15	6,5	4 x 17,5	45	220	150
		200	439	400	300	350	17	6,5	4 x 17,5	45	250	150
		225	469	450	350	400	18	6,5	8 x 17,5	22,5	250	180
		250	469	550	450	500	22	8	8 x M16	22,5	250	180
		280	469	550	450	500	22	8	8 x M16	22,5	250	180
		315	499	660	550	600	22	8	8 x 22	22,5	250	210
	TN	315	499	800	680	740	25	8	8 x 22	22,5	250	210
		355	499	900	780	840	25	8	8 x 22	22,5	250	210
SK 9207	IEC	100	421,5	250	180	215	11	4	4 x 14,5	0	160	99
		112	421,5	250	180	215	11	4	4 x 14,5	0	160	99
		132	441,5	300	230	265	12	4	4 x 14,5	0	210	119
		160	471,5	350	250	300	15	6,5	4 x 17,5	45	220	149
		180	471,5	350	250	300	15	6,5	4 x 17,5	45	220	149
		200	471,5	400	300	350	17	6,5	4 x 17,5	45	250	149
		225	501,5	450	350	400	18	6,5	8 x 17,5	22,5	250	179
		250	501,5	550	450	500	22	8	8 x M16	22,5	250	179
		280	501,5	550	450	500	22	8	8 x M16	22,5	250	179
		315	531,5	660	550	600	22	8	8 x 22	22,5	250	209
	TN	315	531,5	800	680	740	25	8	8 x 22	22,5	250	209
		355	531,5	900	780	840	25	8	8 x 22	22,5	250	209

** ⇨ 65

SK ..207
SK ..307
IEC

IEC			gM	a1	b1	e1	c	f	z x s	w0	Dmax	Lmax
SK 9307	IEC	100	421,5	250	180	215	11	4	4 x 14,5	0	160	99
		112	421,5	250	180	215	11	4	4 x 14,5	0	160	99
		132	441,5	300	230	265	12	4	4 x 14,5	0	210	119
		160	471,5	350	250	300	15	6,5	4 x 17,5	45	220	149
		180	471,5	350	250	300	15	6,5	4 x 17,5	45	220	149
		200	471,5	400	300	350	17	6,5	4 x 17,5	45	250	149
		225	501,5	450	350	400	18	6,5	8 x 17,5	22,5	250	179
		250	501,5	550	450	500	22	8	8 x M16	22,5	250	179
		280	501,5	550	450	500	22	8	8 x M16	22,5	250	179
		315	531,5	660	550	600	22	8	8 x 22	22,5	250	209
	TN	315	531,5	800	680	740	25	8	8 x 22	22,5	250	209
		355	531,5	900	780	840	25	8	8 x 22	22,5	250	209
SK 10207	IEC	100	421,5	250	180	215	11	4	4 x 14,5	0	160	99
		112	421,5	250	180	215	11	4	4 x 14,5	0	160	99
		132	441,5	300	230	265	12	4	4 x 14,5	0	210	119
		160	471,5	350	250	300	15	6,5	4 x 17,5	45	220	149
		180	471,5	350	250	300	15	6,5	4 x 17,5	45	220	149
		200	471,5	400	300	350	17	6,5	4 x 17,5	45	250	149
		225	501,5	450	350	400	18	6,5	8 x 17,5	22,5	250	179
		250	501,5	550	450	500	22	8	8 x M16	22,5	250	179
		280	501,5	550	450	500	22	8	8 x M16	22,5	250	179
		315	531,5	660	550	600	22	8	8 x 22	22,5	250	209
	TN	315	531,5	800	680	740	25	8	8 x 22	22,5	250	209
		355	531,5	900	780	840	25	8	8 x 22	22,5	250	209
SK 10307	IEC	100	421,5	250	180	215	11	4	4 x 14,5	0	160	99
		112	421,5	250	180	215	11	4	4 x 14,5	0	160	99
		132	441,5	300	230	265	12	4	4 x 14,5	0	210	119
		160	471,5	350	250	300	15	6,5	4 x 17,5	45	220	149
		180	471,5	350	250	300	15	6,5	4 x 17,5	45	220	149
		200	471,5	400	300	350	17	6,5	4 x 17,5	45	250	149
		225	501,5	450	350	400	18	6,5	8 x 17,5	22,5	250	179
		250	501,5	550	450	500	22	8	8 x M16	22,5	250	179
		280	501,5	550	450	500	22	8	8 x M16	22,5	250	179
		315	531,5	660	550	600	22	8	8 x 22	22,5	250	209
	TN	315	531,5	800	680	740	25	8	8 x 22	22,5	250	209
		355	531,5	900	780	840	25	8	8 x 22	22,5	250	209

** ⇨ 65

SK ..207
SK ..307
IEC

IEC			gM	a1	b1	e1	c	f	z x s	w0	Dmax	Lmax
SK 11207	IEC	160	545	350	250	300	15	6,5	4 x 17,5	45	228	115
		180	545	350	250	300	15	6,5	4 x 17,5	45	228	115
		200	545	400	300	350	17	6,5	4 x 17,5	45	276	115
		225	575	450	350	400	18	6,5	8 x 17,5	22,5	290	145
		250	575	550	450	500	22	8	8 x M16	22,5	340	145
		280	575	550	450	500	22	8	8 x M16	22,5	340	145
		315	605	660	550	600	22	8	8 x 22	22,5	340	175
	TN	315	605	800	680	740	25	8	8 x 22	22,5	340	175
		355	605	900	780	840	25	8	8 x 22	22,5	340	175
SK 11307	IEC	160	545	350	250	300	15	6,5	4 x 17,5	45	228	145
		180	545	350	250	300	15	6,5	4 x 17,5	45	228	145
		200	545	400	300	350	17	6,5	4 x 17,5	45	276	145
		225	575	450	350	400	18	6,5	8 x 17,5	22,5	290	175
		250	575	550	450	500	22	8	8 x M16	22,5	340	175
		280	575	550	450	500	22	8	8 x M16	22,5	340	175
		315	605	660	550	600	22	8	8 x 22	22,5	340	205
	TN	315	605	800	680	740	25	8	8 x 22	22,5	340	205
		355	605	900	780	840	25	8	8 x 22	22,5	340	205
SK 12207	IEC	160	621	350	250	300	15	6,5	4 x 17,5	45	228	117
		180	621	350	250	300	15	6,5	4 x 17,5	45	228	117
		200	621	400	300	350	17	6,5	4 x 17,5	45	276	117
		225	651	450	350	400	18	6,5	8 x 17,5	22,5	290	147
		250	651	550	450	500	22	8	8 x M16	22,5	340	147
		280	651	550	450	500	22	8	8 x M16	22,5	340	147
		315	681	660	550	600	22	8	8 x 22	22,5	340	177
	TN	315	681	800	680	740	25	8	8 x 22	22,5	340	177
		355	681	900	780	840	25	8	8 x 22	22,5	340	177
SK 12307	IEC	160	621	350	250	300	15	6,5	4 x 17,5	45	228	157
		180	621	350	250	300	15	6,5	4 x 17,5	45	228	157
		200	621	400	300	350	17	6,5	4 x 17,5	45	276	157
		225	651	450	350	400	18	6,5	8 x 17,5	22,5	290	187
		250	651	550	450	500	22	8	8 x M16	22,5	340	187
		280	651	550	450	500	22	8	8 x M16	22,5	340	187
		315	681	660	550	600	22	8	8 x 22	22,5	340	217
	TN	315	681	800	680	740	25	8	8 x 22	22,5	340	217
		355	681	900	780	840	25	8	8 x 22	22,5	340	217

** ⇨ 65

SK ..207
SK ..307
IEC

IEC			gM	a1	b1	e1	c	f	z x s	w0	Dmax	Lmax
SK 13207	IEC	160	656	350	250	300	15	6,5	4 x 17,5	45	228	118
		180	656	350	250	300	15	6,5	4 x 17,5	45	228	118
		200	656	400	300	350	17	6,5	4 x 17,5	45	276	118
		225	686	450	350	400	18	6,5	8 x 17,5	22,5	290	148
		250	686	550	450	500	22	8	8 x M16	22,5	340	148
		280	686	550	450	500	22	8	8 x M16	22,5	340	148
		315	716	660	550	600	22	8	8 x 22	22,5	340	178
	TN	315	716	800	680	740	25	8	8 x 22	22,5	340	178
		355	716	900	780	840	25	8	8 x 22	22,5	340	178
SK 13307	IEC	160	656	350	250	300	15	6,5	4 x 17,5	45	228	158
		180	656	350	250	300	15	6,5	4 x 17,5	45	228	158
		200	656	400	300	350	17	6,5	4 x 17,5	45	276	158
		225	686	450	350	400	18	6,5	8 x 17,5	22,5	290	188
		250	686	550	450	500	22	8	8 x M16	22,5	340	188
		280	686	550	450	500	22	8	8 x M16	22,5	340	188
		315	716	660	550	600	22	8	8 x 22	22,5	340	218
	TN	315	716	800	680	740	25	8	8 x 22	22,5	340	218
		355	716	900	780	840	25	8	8 x 22	22,5	340	218
SK 15207	IEC	160	735	350	250	300	15	6,5	4 x 17,5	45	228	119
		180	735	350	250	300	15	6,5	4 x 17,5	45	228	119
		200	735	400	300	350	17	6,5	4 x 17,5	45	276	119
		225	765	450	350	400	18	6,5	8 x 17,5	22,5	290	149
		250	765	550	450	500	22	8	8 x M16	22,5	340	149
		280	765	550	450	500	22	8	8 x M16	22,5	340	149
		315	795	660	550	600	22	8	8 x 22	22,5	340	179
	TN	315	795	800	680	740	25	8	8 x 22	22,5	340	179
		355	795	900	780	840	25	8	8 x 22	22,5	340	179
SK 15307	IEC	160	735	350	250	300	15	6,5	4 x 17,5	45	228	154 / 194
		180	735	350	250	300	15	6,5	4 x 17,5	45	228	154 / 194
		200	735	400	300	350	17	6,5	4 x 17,5	45	276	154 / 194
		225	765	450	350	400	18	6,5	8 x 17,5	22,5	290	184 / 224
		250	765	550	450	500	22	8	8 x M16	22,5	340	184 / 224
		280	765	550	450	500	22	8	8 x M16	22,5	340	184 / 224
		315	795	660	550	600	22	8	8 x 22	22,5	340	214 / 254
	TN	315	795	800	680	740	25	8	8 x 22	22,5	340	214 / 254
		355	795	900	780	840	25	8	8 x 22	22,5	340	214 / 254

** ⇨ 65

SK ..407
SK ..507

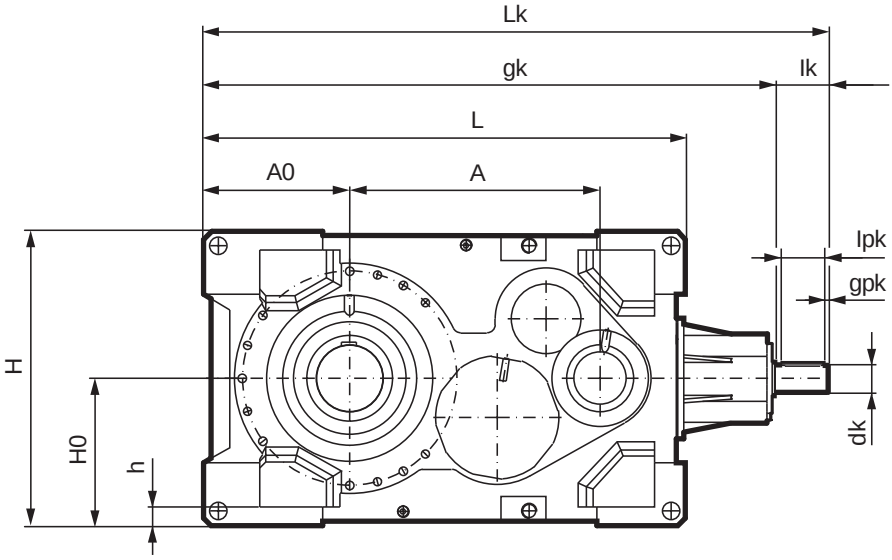

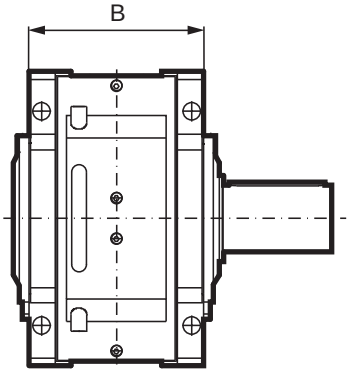

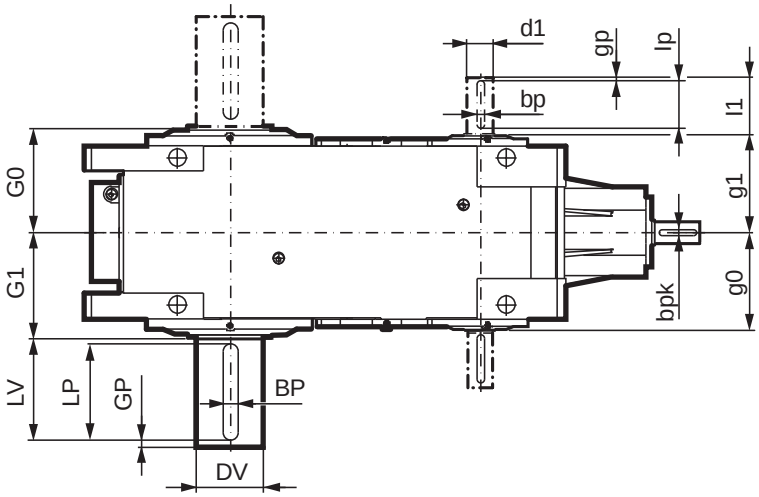

⊢⊣	L	B	H	H0	h	A	A0	g0	g1	G0	G1	DV	LV	LP	BP	GP
SK 7..07	870	350	530	265	35	440	295	175	179	189	197	ø 140	250	200	36	25
SK 8..07	925	350	590	295	35	465	325	175	179	189	197	ø 140	250	200	36	25
SK 9..07	1055	415	650	325	45	530	330	207,5	212,5	249	253	ø 160	300	260	40	20
SK 10..07	1130	415	720	360	45	560	365	207,5	212,5	249	253	ø 160	300	260	40	20
SK 11..07	1210	440	750	375	52	630	370	254	260	270	280	ø 170	300	260	40	20
SK 12..07	1345	510	850	425	57	695	405	288,5	294	305	315	ø 200	350	300	45	25
SK 13..07	1530	550	950	475	60	780	475	323	328	343	353	ø 230	410	350	50	31
SK 15..07	1800	650	1100	550	70	935	545	361	371	385	395	ø 250	410	360	56	25

** ⇨ 65

	SK..407												
I←→I	i_N	LK	gk	dk	lk	lpk	bpk	gpk	d1	l1	lp	bp	gp
SK 7..07	18 … 50	1167	1057	ø 48	110	100	8	5	ø 48	110	100	14	5
	56 … 100	1137		ø 38	80	70	8	5					
SK 8..07	20 … 56	1222	1112	ø 48	110	100	14	5	ø 48	110	100	14	5
	63 … 112	1192		ø 38	80	70	12	5					
SK 9..07	18 … 50	1322	1212	ø 50	110	90	14	10	ø 55	110	90	16	10
	56 … 100	1312		ø 40	100	80	12	10					
SK 10..07	20 … 56	1387	1277	ø 50	110	90	14	10	ø 55	110	90	16	10
	63 … 112	1377		ø 40	100	80	12	10					
SK 11..07	12,6 .. 45	1564	1424	ø 70	140	125	20	7,5	ø 70	140	125	20	7,5
	50 .. 71	1534		ø 50	110	90	14	10					
SK 12..07	12,6 .. 45	1782	1612	ø 80	170	140	22	15	ø 80	170	140	22	15
	50 .. 71	1752		ø 70	140	125	20	7,5					
SK 13..07	12,6 .. 45	1997	1827	ø 80	170	140	22	15	ø 80	170	140	22	15
	50 .. 71	1967		ø 70	140	125	20	7,5					
SK 15..07	12,6 .. 45	2332	2132	ø 100	200	180	28	15	ø 100	210	180	28	15
	50 .. 71	2302		ø 80	170	140	22	15					

	SK..507												
I←→I	i_N	LK	gk	dk	lk	lpk	bpk	gpk	d1	l1	lp	bp	gp
SK 7..07	112 .. 400	1065	1005	ø 28	60	50	8	5	ø 48	110	100	14	5
SK 8..07	125 .. 450	1120	1060	ø 28	60	70	12	5	ø 48	110	100	14	5
SK 9..07	112 .. 400	1262	1182	ø 38	80	70	12	5	ø 55	110	70	18	5
SK 10..07	125 .. 450	1337	1257	ø 38	80	70	12	5	ø 55	110	70	18	5
SK 11..07	80 .. 400	1481	1371	ø 50	110	90	14	10	ø 70	140	125	20	7,5
SK 12..07	80 .. 400	1634	1524	ø 50	110	90	14	10	ø 80	170	140	22	15
SK 13..07	80 .. 400	1907	1767	ø 70	140	125	20	7,5	ø 80	170	140	22	15
SK 15..07	80 .. 400	2192	2052	ø 70	140	125	20	7,5	ø 100	210	180	28	15

** ⇨ 65

SK ..407
SK ..507
FAN

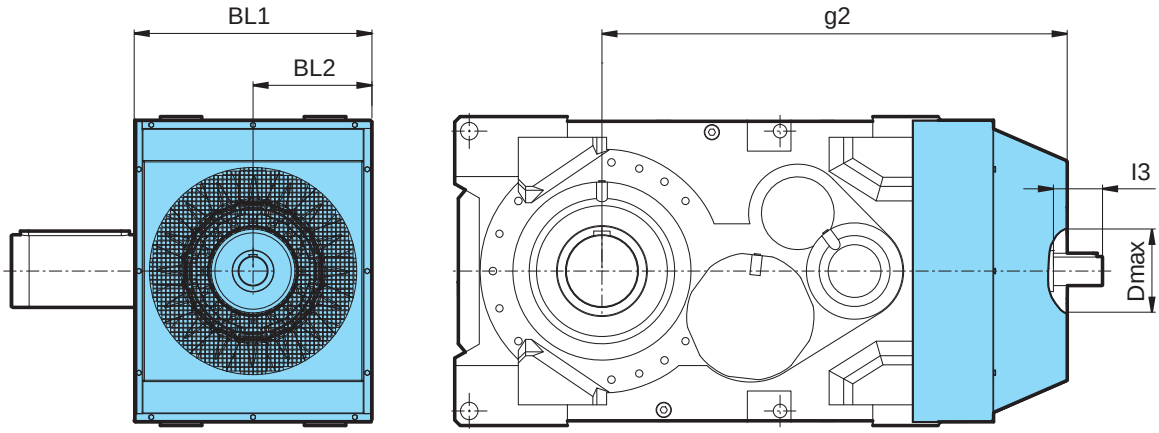

⇨ 🕮 49

FAN	i_N	BL1	BL2	g2	l3	Dmax
SK 7407	18 … 50	438	219	848,5	74	ø 140
	56 … 100				44	
SK 7507	112 .. 400	438	219	796,5	24	ø 140
SK 8407	20 … 56	438	219	873,5	74	ø 140
	63 … 112				44	
SK 8507	125 .. 450	438	219	821,5	44	ø 140
SK 9407	18 … 50	503	251,5	968,5	74	ø 140
	56 … 100				64	
SK 9507	112 .. 400	503	251,5	938,5	44	ø 140
SK 10407	20 … 56	503	251,5	998,5	74	ø 140
	63 … 112				64	
SK 10507	125 .. 450	503	251,5	978,5	44	ø 140
SK 11407	12,6 ... 45	574	287	1125	100	ø 210
	50 ... 71				70	
SK 11507	80 ... 400	574	287	1050	70	ø 210
SK 12407	12,6 ... 45	654	327	1280	135	ø 220
	50 ... 71				105	
SK 12507	80 ... 400	654	327	1190	75	ø 220
SK 13407	12,6 ... 45	704	352	1425	135	ø 240
	50 ... 71				105	
SK 13507	80 ... 400	704	352	1365	105	ø 240
SK 15407	12,6 ... 45	814	407	1665	160	ø 250
	50 ... 71				130	
SK 15507	80 ... 400	814	407	1585	100	ø 250

** ⇨🕮 65

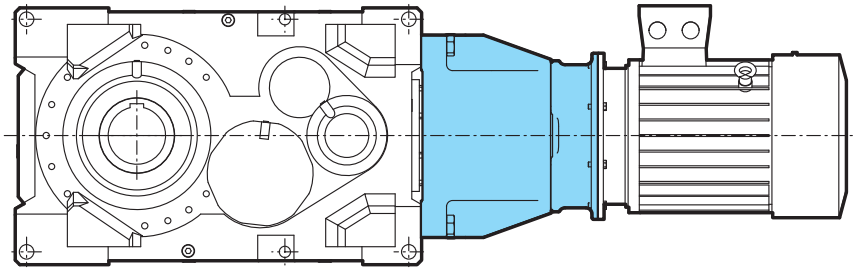

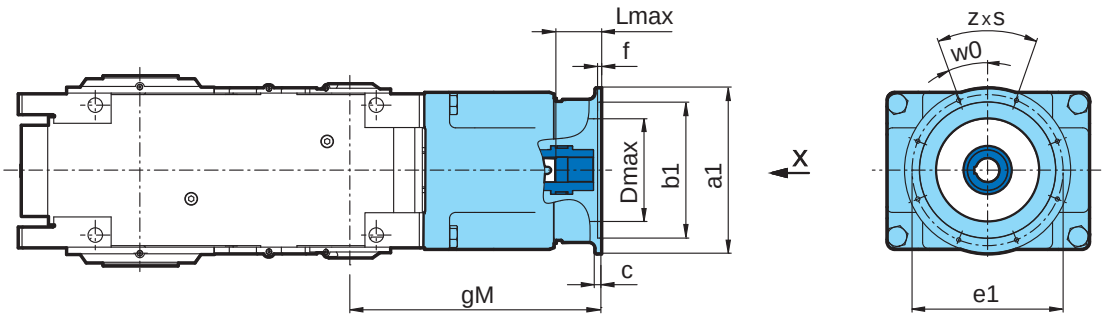

IEC			gM	a1	b1	e1	c	f	z x s	w0	Dmax	Lmax
SK 7407	IEC	100	527	250	180	215	11	4	4 x 14,5	0	160	95 / 125
		112	527	250	180	215	11	4	4 x 14,5	0	160	95 / 125
		132	547	300	230	265	12	4	4 x 14,5	0	210	115 / 145
		160	577	350	250	300	15	6,5	4 x 17,5	45	220	145 / 175
		180	577	350	250	300	15	6,5	4 x 17,5	45	220	145 / 175
		200	577	400	300	350	17	6,5	4 x 17,5	45	250	145 / 175
		225	607	450	350	400	18	6,5	8 x 17,5	22,5	250	175 / 205
		250	607	550	450	500	22	8	8 x M16	22,5	250	175 / 205
		280	607	550	450	500	22	8	8 x M16	22,5	250	175 / 205
		315	637	660	550	600	22	8	8 x 22	22,5	250	205 / 235
	TN	315	637	800	680	740	25	8	8 x 22	22,5	250	205 / 235
		355	637	900	780	840	25	8	8 x 22	22,5	250	205 / 235
SK 7507	IEC	100	425	250	180	215	11	4	4 x 14,5	0	160	95
		112	425	250	180	215	11	4	4 x 14,5	0	160	95
		132	445	300	230	265	12	4	4 x 14,5	0	210	115
		160	475	350	250	300	15	6,5	4 x 17,5	45	220	145
		180	475	350	250	300	15	6,5	4 x 17,5	45	220	145
		200	475	400	300	350	17	6,5	4 x 17,5	45	250	145
		225	505	450	350	400	18	6,5	8 x 17,5	22,5	250	175
		250	505	550	450	500	22	8	8 x M16	22,5	250	175
		280	505	550	450	500	22	8	8 x M16	22,5	250	175
		315	535	660	550	600	22	8	8 x 22	22,5	250	205
	TN	315	535	800	680	740	25	8	8 x 22	22,5	250	205
		355	535	900	780	840	25	8	8 x 22	22,5	250	205

** ⇨ 65

SK ..407
SK ..507
IEC

IEC			gM	a1	b1	e1	c	f	z x s	w0	Dmax	Lmax
SK 8407	IEC	100	527	250	180	215	11	4	4 x 14,5	0	160	95 / 125
		112	527	250	180	215	11	4	4 x 14,5	0	160	95 / 125
		132	547	300	230	265	12	4	4 x 14,5	0	210	115 / 145
		160	577	350	250	300	15	6,5	4 x 17,5	45	220	145 / 175
		180	577	350	250	300	15	6,5	4 x 17,5	45	220	145 / 175
		200	577	400	300	350	17	6,5	4 x 17,5	45	250	145 / 175
		225	607	450	350	400	18	6,5	8 x 17,5	22,5	250	175 / 205
		250	607	550	450	500	22	8	8 x M16	22,5	250	175 / 205
		280	607	550	450	500	22	8	8 x M16	22,5	250	175 / 205
		315	637	660	550	600	22	8	8 x 22	22,5	250	205 / 235
	TN	315	637	800	680	740	25	8	8 x 22	22,5	250	205 / 235
		355	637	900	780	840	25	8	8 x 22	22,5	250	205 / 235
SK 8507	IEC	100	425	250	180	215	11	4	4 x 14,5	0	160	75
		112	425	250	180	215	11	4	4 x 14,5	0	160	75
		132	445	300	230	265	12	4	4 x 14,5	0	210	95
		160	475	350	250	300	15	6,5	4 x 17,5	45	220	125
		180	475	350	250	300	15	6,5	4 x 17,5	45	220	125
		200	475	400	300	350	17	6,5	4 x 17,5	45	250	125
		225	505	450	350	400	18	6,5	8 x 17,5	22,5	250	155
		250	505	550	450	500	22	8	8 x M16	22,5	250	155
		280	505	550	450	500	22	8	8 x M16	22,5	250	155
		315	535	660	550	600	22	8	8 x 22	22,5	250	185
	TN	315	535	800	680	740	25	8	8 x 22	22,5	250	185
		355	535	900	780	840	25	8	8 x 22	22,5	250	185
SK 9407	IEC	100	587	250	180	215	11	4	4 x 14,5	0	160	125 / 135
		112	587	250	180	215	11	4	4 x 14,5	0	160	125 / 135
		132	607	300	230	265	12	4	4 x 14,5	0	210	145 / 155
		160	637	350	250	300	15	6,5	4 x 17,5	45	220	175 / 185
		180	637	350	250	300	15	6,5	4 x 17,5	45	220	175 / 185
		200	637	400	300	350	17	6,5	4 x 17,5	45	250	175 / 185
		225	667	450	350	400	18	6,5	8 x 17,5	22,5	250	205 / 215
		250	667	550	450	500	22	8	8 x M16	22,5	250	205 / 215
		280	667	550	450	500	22	8	8 x M16	22,5	250	205 / 215
		315	697	660	550	600	22	8	8 x 22	22,5	250	235 / 245
	TN	315	697	800	680	740	25	8	8 x 22	22,5	250	235 / 245
		355	697	900	780	840	25	8	8 x 22	22,5	250	235 / 245

** ⇨ 65

SK ..407
SK ..507
IEC

IEC			gM	a1	b1	e1	c	f	z x s	w0	Dmax	Lmax
SK 9507	IEC	100	485	250	180	215	11	4	4 x 14,5	0	160	83
		112	485	250	180	215	11	4	4 x 14,5	0	160	83
		132	505	300	230	265	12	4	4 x 14,5	0	210	103
		160	535	350	250	300	15	6,5	4 x 17,5	45	220	133
		180	535	350	250	300	15	6,5	4 x 17,5	45	220	133
		200	535	400	300	350	17	6,5	4 x 17,5	45	250	133
		225	565	450	350	400	18	6,5	8 x 17,5	22,5	250	163
		250	565	550	450	500	22	8	8 x M16	22,5	250	163
		280	565	550	450	500	22	8	8 x M16	22,5	250	163
		315	595	660	550	600	22	8	8 x 22	22,5	250	193
	TN	315	595	800	680	740	25	8	8 x 22	22,5	250	193
		355	595	900	780	840	25	8	8 x 22	22,5	250	193
SK 10407	IEC	100	597	250	180	215	11	4	4 x 14,5	0	160	135 / 145
		112	597	250	180	215	11	4	4 x 14,5	0	160	135 / 145
		132	617	300	230	265	12	4	4 x 14,5	0	210	155 / 165
		160	647	350	250	300	15	6,5	4 x 17,5	45	220	185 / 195
		180	647	350	250	300	15	6,5	4 x 17,5	45	220	185 / 195
		200	647	400	300	350	17	6,5	4 x 17,5	45	250	185 / 195
		225	677	450	350	400	18	6,5	8 x 17,5	22,5	250	215 / 225
		250	677	550	450	500	22	8	8 x M16	22,5	250	215 / 225
		280	677	550	450	500	22	8	8 x M16	22,5	250	215 / 225
		315	707	660	550	600	22	8	8 x 22	22,5	250	245 / 255
	TN	315	707	800	680	740	25	8	8 x 22	22,5	250	245 / 255
		355	707	900	780	840	25	8	8 x 22	22,5	250	245 / 255
SK 10507	IEC	100	495	250	180	215	11	4	4 x 14,5	0	160	83
		112	495	250	180	215	11	4	4 x 14,5	0	160	83
		132	515	300	230	265	12	4	4 x 14,5	0	210	103
		160	545	350	250	300	15	6,5	4 x 17,5	45	220	133
		180	545	350	250	300	15	6,5	4 x 17,5	45	220	133
		200	545	400	300	350	17	6,5	4 x 17,5	45	250	133
		225	575	450	350	400	18	6,5	8 x 17,5	22,5	250	163
		250	575	550	450	500	22	8	8 x M16	22,5	250	163
		280	575	550	450	500	22	8	8 x M16	22,5	250	163
		315	605	660	550	600	22	8	8 x 22	22,5	250	193
	TN	315	605	800	680	740	25	8	8 x 22	22,5	250	193
		355	605	900	780	840	25	8	8 x 22	22,5	250	193

** ⇨ 65

SK ..407
SK ..507
IEC

IEC			gM	a1	b1	e1	c	f	z x s	w0	Dmax	Lmax
SK 11407	IEC	160	684	350	250	300	15	6,5	4 x 17,5	45	228	120 / 150
		180	684	350	250	300	15	6,5	4 x 17,5	45	228	120 / 150
		200	684	400	300	350	17	6,5	4 x 17,5	45	276	120 / 150
		225	714	450	350	400	18	6,5	8 x 17,5	22,5	290	150 / 180
		250	714	550	450	500	22	8	8 x M16	22,5	340	150 / 180
		280	714	550	450	500	22	8	8 x M16	22,5	340	150 / 180
		315	744	660	550	600	22	8	8 x 22	22,5	340	180 / 210
	TN	315	744	800	680	740	25	8	8 x 22	22,5	340	180 / 210
		355	744	900	780	840	25	8	8 x 22	22,5	340	180 / 210
SK 11507	IEC	160	601	350	250	300	15	6,5	4 x 17,5	45	228	120
		180	601	350	250	300	15	6,5	4 x 17,5	45	228	120
		200	601	400	300	350	17	6,5	4 x 17,5	45	276	120
		225	631	450	350	400	18	6,5	8 x 17,5	22,5	290	150
		250	631	550	450	500	22	8	8 x M16	22,5	340	150
		280	631	550	450	500	22	8	8 x M16	22,5	340	150
		315	661	660	550	600	22	8	8 x 22	22,5	340	180
	TN	315	661	800	680	740	25	8	8 x 22	22,5	340	180
		355	661	900	780	840	25	8	8 x 22	22,5	340	180
SK 12407	IEC	160	801	350	250	300	15	6,5	4 x 17,5	45	228	119 / 149
		180	801	350	250	300	15	6,5	4 x 17,5	45	228	119 / 149
		200	801	400	300	350	17	6,5	4 x 17,5	45	276	119 / 149
		225	831	450	350	400	18	6,5	8 x 17,5	22,5	290	149 / 179
		250	831	550	450	500	22	8	8 x M16	22,5	340	149 / 179
		280	831	550	450	500	22	8	8 x M16	22,5	340	149 / 179
		315	861	660	550	600	22	8	8 x 22	22,5	340	179 / 209
	TN	315	861	800	680	740	25	8	8 x 22	22,5	340	179 / 209
		355	861	900	780	840	25	8	8 x 22	22,5	340	179 / 209
SK 12507	IEC	160	650	350	250	300	15	6,5	4 x 17,5	45	228	116
		180	650	350	250	300	15	6,5	4 x 17,5	45	228	116
		200	650	400	300	350	17	6,5	4 x 17,5	45	276	116
		225	680	450	350	400	18	6,5	8 x 17,5	22,5	290	146
		250	680	550	450	500	22	8	8 x M16	22,5	340	146
		280	680	550	450	500	22	8	8 x M16	22,5	340	146
		315	710	660	550	600	22	8	8 x 22	22,5	340	176
	TN	315	710	800	680	740	25	8	8 x 22	22,5	340	176
		355	710	900	780	840	25	8	8 x 22	22,5	340	176

** ⇨ 65

SK ..407
SK ..507
IEC

IEC			gM	a1	b1	e1	c	f	z x s	w0	Dmax	Lmax
SK 13407	IEC	160	862	350	250	300	15	6,5	4 x 17,5	45	228	120 / 150
		180	862	350	250	300	15	6,5	4 x 17,5	45	228	120 / 150
		200	862	400	300	350	17	6,5	4 x 17,5	45	276	120 / 150
		225	892	450	350	400	18	6,5	8 x 17,5	22,5	290	150 / 180
		250	892	550	450	500	22	8	8 x M16	22,5	340	150 / 180
		280	892	550	450	500	22	8	8 x M16	22,5	340	150 / 180
		315	922	660	550	600	22	8	8 x 22	22,5	340	180 / 210
	TN	315	922	800	680	740	25	8	8 x 22	22,5	340	180 / 210
		355	922	900	780	840	25	8	8 x 22	22,5	340	180 / 210
SK 13507	IEC	160	771	350	250	300	15	6,5	4 x 17,5	45	228	119
		180	771	350	250	300	15	6,5	4 x 17,5	45	228	119
		200	771	400	300	350	17	6,5	4 x 17,5	45	276	119
		225	801	450	350	400	18	6,5	8 x 17,5	22,5	290	149
		250	801	550	450	500	22	8	8 x M16	22,5	340	149
		280	801	550	450	500	22	8	8 x M16	22,5	340	149
		315	831	660	550	600	22	8	8 x 22	22,5	340	179
	TN	315	831	800	680	740	25	8	8 x 22	22,5	340	179
		355	831	900	780	840	25	8	8 x 22	22,5	340	179
SK 15407	IEC	160	972	350	250	300	15	6,5	4 x 17,5	45	228	120 / 150
		180	972	350	250	300	15	6,5	4 x 17,5	45	228	120 / 150
		200	972	400	300	350	17	6,5	4 x 17,5	45	276	120 / 150
		225	1002	450	350	400	18	6,5	8 x 17,5	22,5	290	150 / 180
		250	1002	550	450	500	22	8	8 x M16	22,5	340	150 / 180
		280	1002	550	450	500	22	8	8 x M16	22,5	340	150 / 180
		315	1032	660	550	600	22	8	8 x 22	22,5	340	180 / 210
	TN	315	1032	800	680	740	25	8	8 x 22	22,5	340	180 / 210
		355	1032	900	780	840	25	8	8 x 22	22,5	340	180 / 210
SK 15507	IEC	160	832	350	250	300	15	6,5	4 x 17,5	45	228	120
		180	832	350	250	300	15	6,5	4 x 17,5	45	228	120
		200	832	400	300	350	17	6,5	4 x 17,5	45	276	120
		225	862	450	350	400	18	6,5	8 x 17,5	22,5	290	150
		250	862	550	450	500	22	8	8 x M16	22,5	340	150
		280	862	550	450	500	22	8	8 x M16	22,5	340	150
		315	892	660	550	600	22	8	8 x 22	22,5	340	180
	TN	315	892	800	680	740	25	8	8 x 22	22,5	340	180
		355	892	900	780	840	25	8	8 x 22	22,5	340	180

** ⇨ 65

SK ..07
Ø

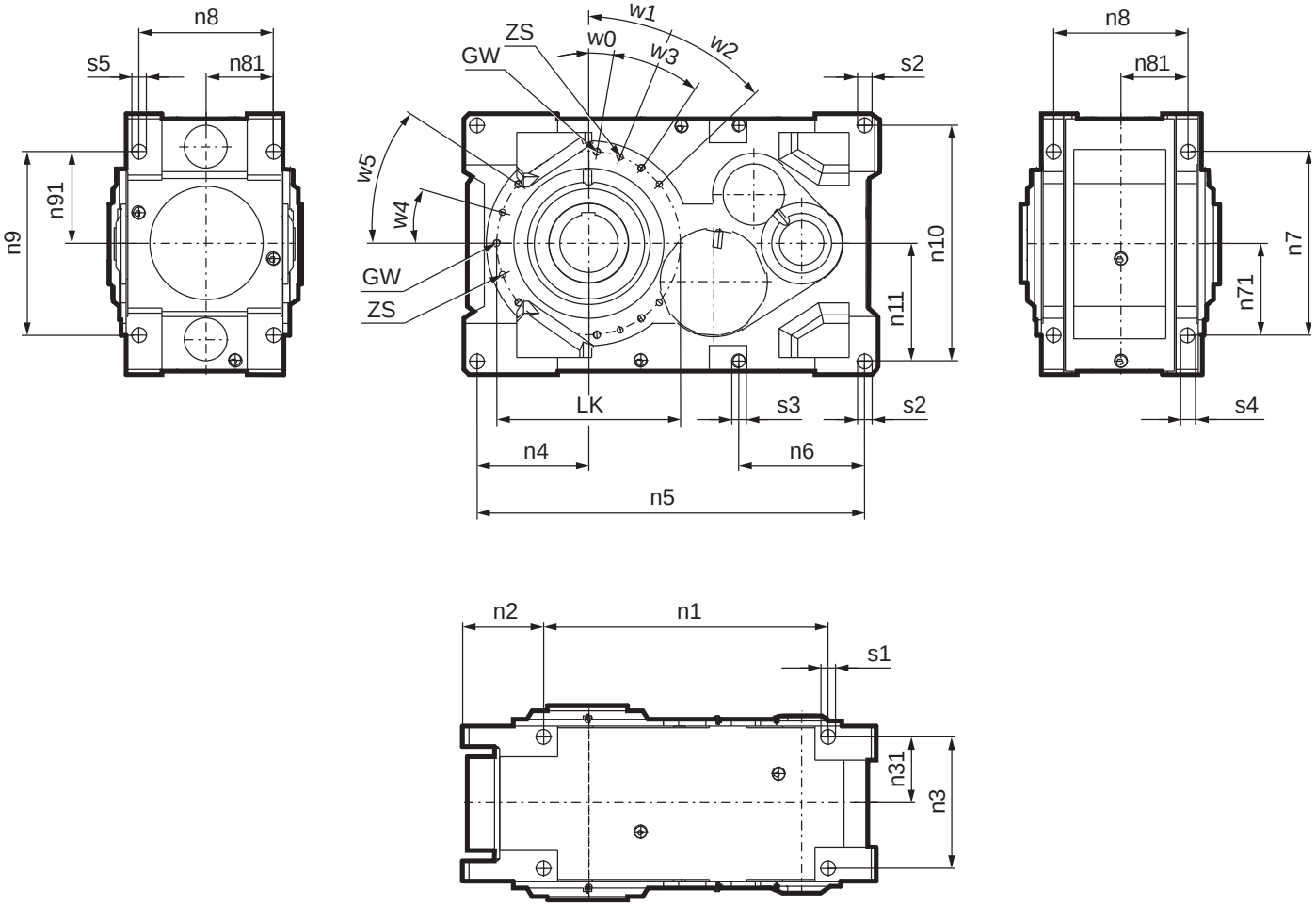
n8
s5
n81
n91
n9
w1
w2
w3
w0
ZS
GW
w5
w4
GW
ZS
s2
n10
n11
LK
s3
s2
n4
n6
n5
n8
n81
n7
n71
s4
n2
n1
s1
n31
n3

** ⇨ 📖 65

Ø	s1	s2	s3	s4	s5	n1	n2	n3	n31	n4	n5
SK 7..07	ø 28	ø 28	M24 x 30	ø 28	M24	590	160	305	152,5	270	820
SK 8..07	ø 28	ø 28	M24 x 30	ø 28	M24	645	160	305	152,5	300	875
SK 9..07	ø 35	ø 35	M30 x 45	ø 35	M30	730	175	352	176	302,5	995
SK 10..07	ø 35	ø 35	M30 x 45	ø 35	M30	805	170	352	176	335	1057
SK 11..07	ø 42	ø 42	M36 x 58	ø 42	M36	850	217,5	370	185	330	1130
SK 12..07	ø 48	ø 48	M42 x 65	ø 48	M42	930	257,5	430	215	365	1265
SK 13..07	ø 55	ø 55	M48 x 75	ø 55	M48	1050	290	465	232,5	425	1430
SK 15..07	ø 65	ø 65	M56 x 90	ø 65	M56	1230	345	550	275	490	1690

Ø	n6	n7	n71	n8	n81	n9	n91	n10	n11	n12	n121
SK 7..07	220	380	190	300	150	380	190	460	230	-	-
SK 8..07	220	440	220	300	150	380	190	540	270	460	230
SK 9..07	325	440	220	362	181	440	220	540	270	-	-
SK 10..07	325	500	250	362	181	440	220	640	320	540	270
SK 11..07	340	520	260	385	192,5	520	260	670	335	-	-
SK 12..07	410	600	300	440	220	600	300	770	385	-	-
SK 13..07	450	700	350	475	237,5	700	350	850	425	-	-
SK 15..07	530	800	400	560	280	800	400	990	495	-	-

Ø	LK	GW	GW2	ZS	w0	w1	w2	w3	w4	w5
SK 7..07	ø 350	M16 x 25	M16 x 25	ø16H7 x 22	22,5°	32,5	-	8 x 45	-	-
SK 8..07	ø 350	M16 x 25	M16 x 25	ø16H7 x 22	22,5°	32,5	-	8 x 45	-	-
SK 9..07	ø 500	M24 x 40	M24 x 30	ø25H7 x 27	22,5°	0	-	45	-	22,5
SK 10..07	ø 500	M24 x 40	M24 x 30	ø25H7 x 27	22,5°	0	-	45	-	22,5
SK 11..07	ø 530	M20 x 38	M20 x 38	ø20H7 x 30	5°	15	30 °	30	17,5	35
SK 12..07	ø 600	M24 x 40	M24 x 40	ø20H7 x 30	5°	15	30 °	30	20	40
SK 13..07	ø 700	M24 x 40	M24 x 40	ø25H7 x 35	0°	15	30 °	30	19	38
SK 15..07	ø 800	M36 x 58	M36 x 58	ø30H7 x 50	0°	15	30 °	30	18	36

** ⇨ 65

SK ..07

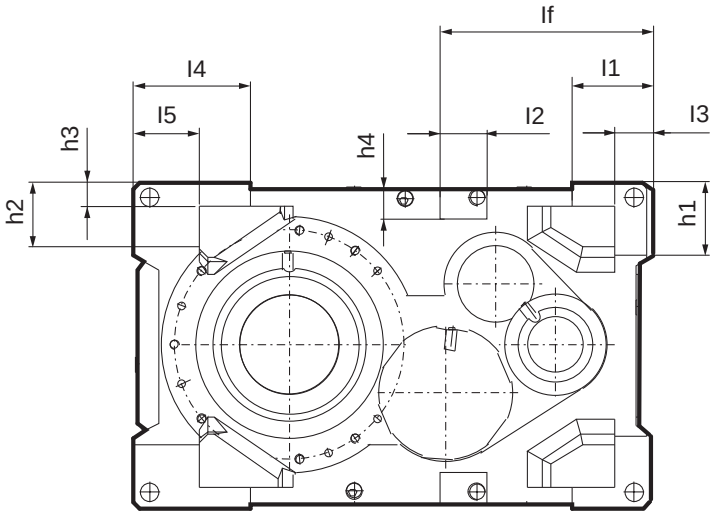

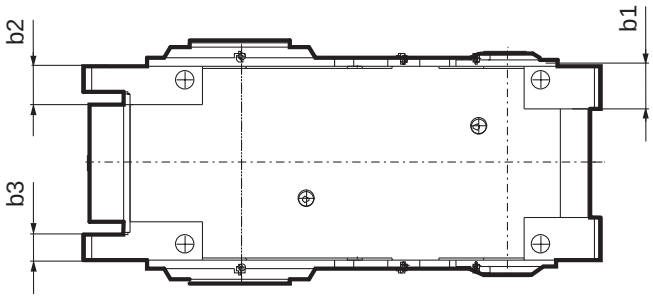

⊢⊣	b1	b2	b3	h1	h2	h3	h4	l1	l2	l3	l4	l5	lf
SK 7..07	49	-	49	100	100	35	55	180	60	80	200	120	285
SK 8..07	49	-	49	130	100	35	85	180	60	80	200	120	285
SK 9..07	67	67	53	150	150	45	75	200	105	95	255	120	420
SK 10..07	67	67	53	185	150	45	107	197,5	90	92,5	250	120	400
SK 11..07	102	85	57	155	155	52	105	100	80	270	145	458	458
SK 12..07	114	95	69	190	190	57	80	125	85	310	175	540	540
SK 13..07	126	100	76	198	198	60	84	120	95	350	175	585	585
SK 15..07	150	120	97	235	235	70	91	170	115	445	210	690	690

** ⇨ 65

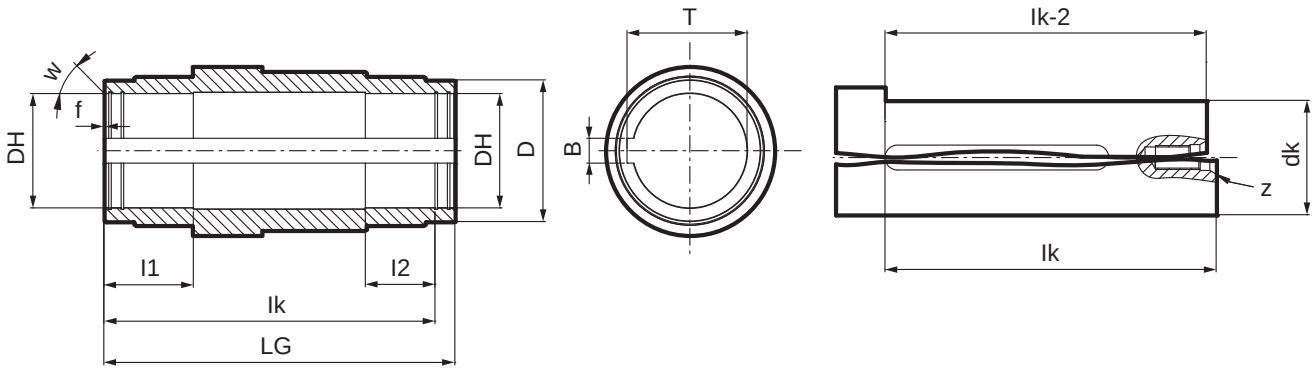

⇨ 📖 57

A	DH	LG	dk	lk	l1	l2	D	f	w	B	T	z
SK 7..07	ø125 H7	394	ø125 h6	369	100	80	ø 160	2	30	32	132,7	M24
SK 8..07	ø125 H7	394	ø125 h6	369	100	80	ø 160	2	30	32	132,7	M24
SK 9..07	ø160 H7	506	ø160 h6	486	130	110	ø 220	2	30	40	169,4	M30
SK 10..07	ø160 H7	506	ø160 h6	486	130	110	ø 220	2	30	40	169,4	M30
SK 11..07	ø170 H7	560	ø170 h6	525	140	105	ø 240	2	30	40	179,4	M30
SK 12..07	ø190 H7	630	ø190 h6	595	160	125	ø 250	2	30	45	200,4	M30
SK 13..07	ø230 H7	706	ø230 h6	666	180	140	ø 285	2	30	50	241,4	M36
SK 15..07	ø250 H7	790	ø250 h6	745	200	155	ø 320	2	30	56	262,4	M36

AFVL2/3	DH	LG	dk	lk	l1	l2	D	f	w	B	T	z
SK 7..07	ø125 H7	642	ø125 h6	617	100	80	ø 160	2	30	32	132,7	M24
SK 8..07	ø125 H7	642	ø125 h6	617	100	80	ø 160	2	30	32	132,7	M24
SK 9..07	ø160 H7	770,5	ø160 h6	745,5	110	80	ø 220	2	30	40	169,4	M30
SK 10..07	ø160 H7	770,5	ø160 h6	745,5	110	80	ø 220	2	30	40	169,4	M30
SK 11..07	ø160 H7	730	ø160 h6	695	140	105	ø 240	2	30	40	169,4	M30
SK 12..07	ø190 H7	800	ø190 h6	765	160	125	ø 250	2	30	45	190,4	M30
SK 13..07	ø230 H7	896	ø230 h6	856	180	140	ø 285	2	30	45	210,4	M36
SK 15..07	ø250 H7	1040	ø250 h6	995	200	155	ø 320	2	30	50	241,4	M36

** ⇨📖 65

SK ..07
AS|AFSVL2/3

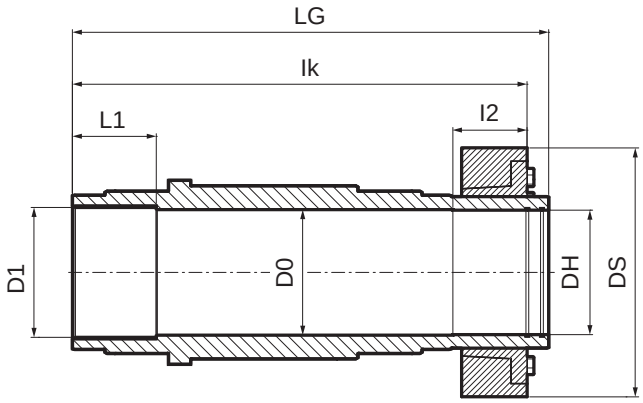

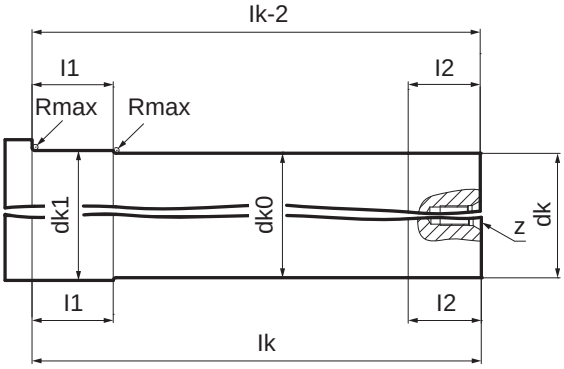

⇨ 📖 57

AS	DH	D0	D1	L1	DS	LG	dk1	dk0	dk	lk	l1	l2	R_{max}	z
SK 7..07	ø125 H7	ø125,5	ø125	90	290	484	ø125 h8	ø125	ø 125 h6	465	100	65	3	M24
SK 8..07	ø125 H7	ø125,5	ø125	90	290	484	ø125 h8	ø125	ø 125 h6	465	100	65	3	M24
SK 9..07	ø160 H7	ø160,5	ø160	110	320	628	ø160 h8	ø160	ø 160 h6	596	110	85	3	M30
SK 10..07	ø160 H7	ø160,5	ø160	110	320	628	ø160 h8	ø160	ø 160 h6	596	110	85	3	M30
SK 11..07	ø170 H7	ø172	ø180	125	ø370	690	ø180 h8	ø170	ø170 g6	658	125	105	5	M30
SK 12..07	ø190 H7	ø192	ø200	135	ø405	770	ø200 h8	ø190	ø190 g6	736	130	120	5	M30
SK 13..07	ø230 H7	ø232	ø240	155	ø460	880	ø240 h8	ø230	ø230 g6	838	150	135	5	M36
SK 15..07	ø250 H7	ø252	ø260	175	ø485	970	ø260 h8	ø250	ø250 g6	928	170	150	5	M36

AFSVL2/3	DH	D0	D1	L1	DS	LG	dk1	dk0	dk	lk	l1	l2	R_{max}	z
SK 7..07	ø125 H7	ø125,5	ø125	90	300	733	ø125 h8	ø125	ø 125 h6	713	100	65	3	M24
SK 8..07	ø125 H7	ø125,5	ø125	90	300	733	ø125 h8	ø125	ø 125 h6	713	100	65	3	M24
SK 9..07	ø160 H7	ø160,5	ø160	110	320	889,5	ø160 h8	ø160	ø 160 h6	854,5	110	82	3	M30
SK 10..07	ø160 H7	ø160,5	ø160	110	320	889,5	ø160 h8	ø160	ø 160 h6	854,5	110	82	3	M30
SK 11..07	ø170 H7	ø172	ø180	125	ø370	860	ø180 h8	ø170	ø170 g6	828	125	105	5	M30
SK 12..07	ø190 H7	ø192	ø200	135	ø405	940	ø200 h8	ø190	ø190 g6	906	130	120	5	M30
SK 13..07	ø230 H7	ø232	ø240	155	ø460	1070	ø240 h8	ø230	ø230 g6	1028	150	135	5	M36
SK 15..07	ø250 H7	ø252	ø260	175	ø485	1220	ø260 h8	ø250	ø250 g6	1178	170	150	5	M36

** ⇨ 📖 65

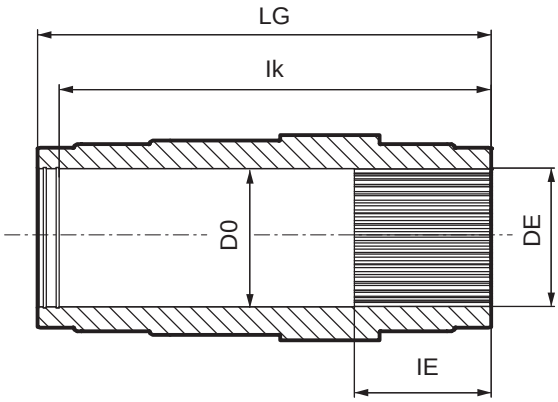

EA	DE	LE	LG	D0	lk
SK 7..07	N 130 x 5 x 24 - DIN 5480	85	394	ø 130	374
SK 8..07	N 130 x 5 x 24 - DIN 5480	85	394	ø 130	374
SK 9..07	N 140 x 3 x 45 - DIN 5480	100	506	ø 140	476
SK 10..07	N 140 x 3 x 45 - DIN 5480	100	506	ø 140	476
SK 11..07	N 170 x 5 x 32 - DIN 5480	160	560	ø 170	525
SK 12..07	N 190 x 5 x 36 - DIN 5480	190	630	ø 190	595
SK 13..07	N 220 x 5 x 42 - DIN 5480	215	706	ø 220	666
SK 15..07	N 250 x 5 x 48 - DIN 5480	245	790	ø 250	745

** ⇨ 65

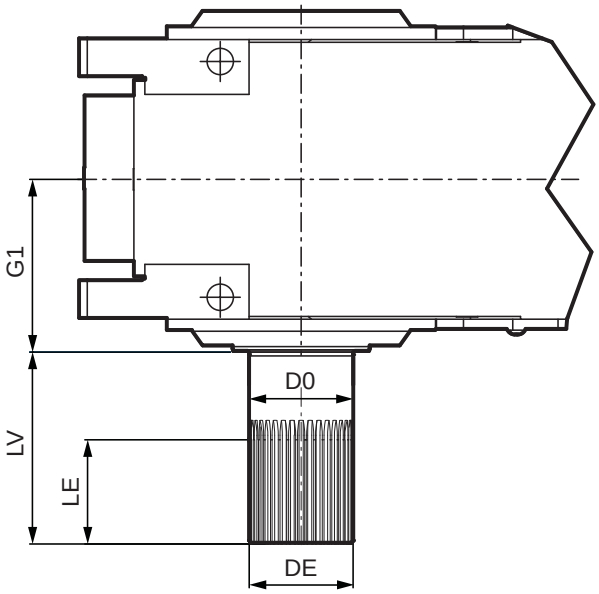

EV	DE	LE	G1	LV	D0
SK 7..07	W 130 x 5 x 24 - DIN 5480	85	197	250	ø 130
SK 8..07	W 130 x 5 x 24 - DIN 5480	85	197	250	ø 130
SK 9..07	W 140 x 3 x 45 - DIN 5480	100	253	300	ø 140
SK 10..07	W 140 x 3 x 45 - DIN 5480	100	253	300	ø 140
SK 11..07	W 170 x 5 x 32 - DIN 5480	160	280	300	ø 170
SK 12..07	W 190 x 5 x 36 - DIN 5480	190	315	350	ø 190
SK 13..07	W 220 x 5 x 42 - DIN 5480	215	353	410	ø 220
SK 15..07	W 250 x 5 x 48 - DIN 5480	245	395	410	ø 250

** ⇨ 📖 65

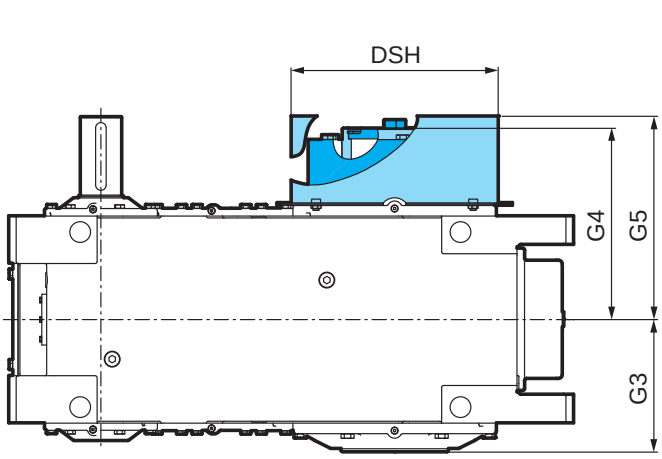

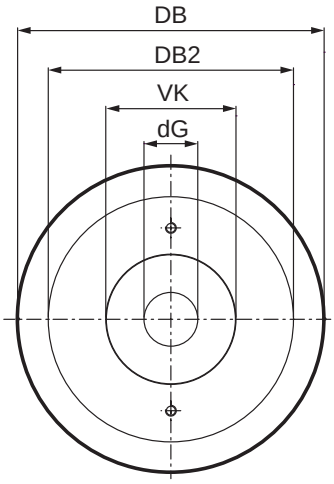

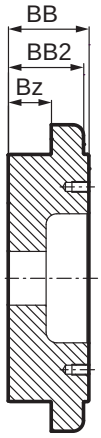

⇨ 📖 36, 38

⇨ 📖 38

H | H66	DSH	G3	G4	G5
SK 11..07	ø 460	280	410	440
SK 12..07	ø 500	315	455	480
SK 13..07	ø 550	353	527	555
SK 15..07	ø 630	395	575	605

B	DB	DB2	VK	BB	BB2	Bz	dG
SK 11..07	ø 215	ø169,8	ø 100	42,5	37,5	27,5	ø33
SK 12..07	ø235	ø189,8	ø 100	44,5	39,5	29,5	ø33
SK 13..07	ø275	ø229,8	ø 100	56,5	51,5	36,5	ø52
SK 15..07	ø295	ø249,8	ø 100	56,5	51,5	36,5	ø52

** ⇨📖 65

SK ..07 R

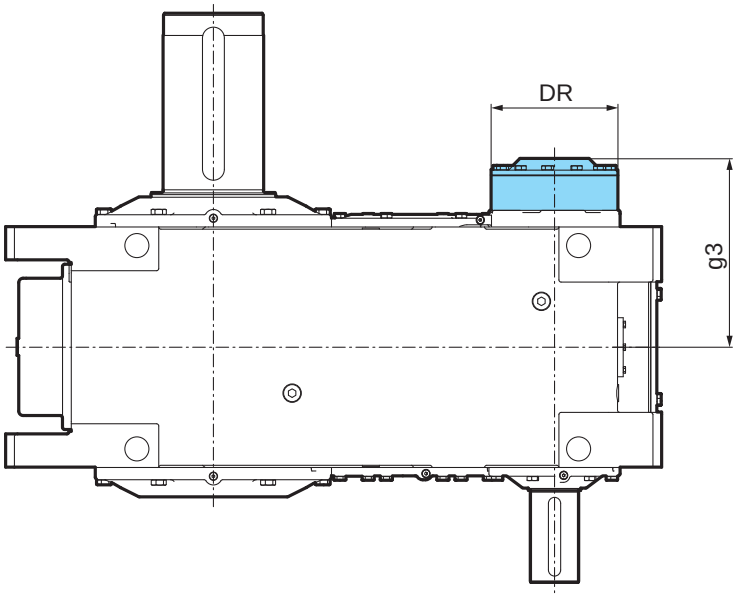

⇨ 📖 40

R	i_N	DR	g3
SK 7207	7,1 - 25	190	295
SK 7307	28 - 355	175	288
SK 7407	18 - 100	190	295
SK 7507	112 - 400	175	288
SK 8207	8 - 28	190	295
SK 8307	31,5 - 400	175	288
SK 8407	20 - 112	190	295
SK 8507	125 - 450	175	288
SK 9207	7,1 - 25	210	329,5
SK 9307	28 - 355	190	326,5
SK 9407	18 - 100	210	329,5
SK 9507	112 - 400	190	326,5
SK 10207	8 - 28	210	329,5
SK 10307	28 - 280	190	326,5
SK 10407	20 - 112	210	329,5
SK 10507	125 - 450	190	326,5

R	i_N	DR	g3
SK 11207	5,6 - 20	245	360
SK 11307	31,5 - 112	190	340
	22,4 - 28	210	350
SK 11407	11,2 - 80	245	360
SK 11507	112 - 400	190	340
	80 - 100	210	350
SK 12207	5,6 - 20	290	415
SK 12307	22,4 - 112	210	385
SK 12407	12,6 - 71	290	415
SK 12507	80 - 400	210	385
SK 13207	5,6 - 20	290	431
SK 13307	22,4 - 112	210	410
SK 13407	12,6 - 71	290	431
SK 13507	80 - 400	210	416,5
SK 15207	5,6 - 20	400	510
SK 15307	22,4 - 112	290	485
SK 15407	12,6 - 71	400	510
SK 15507	80 - 400	290	485

** ⇨📖 65

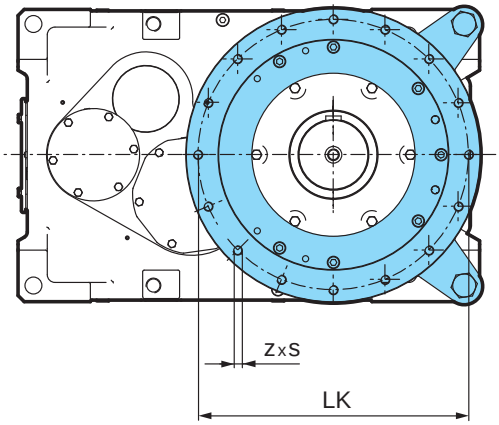

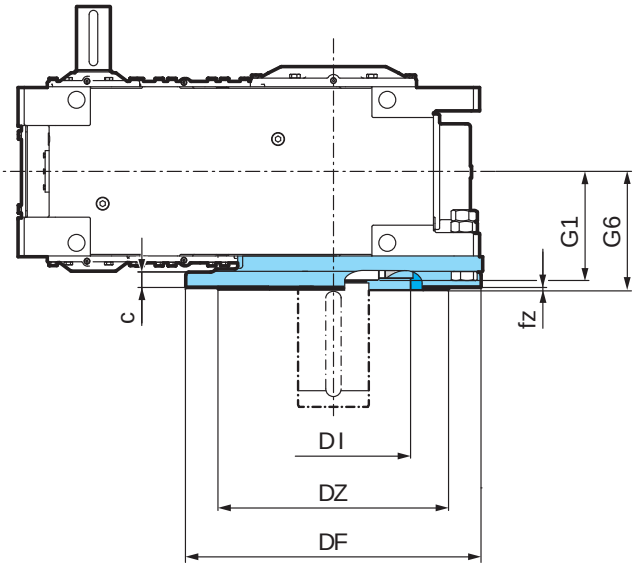

⇨ 📖 56

F	DF	G1	G6	LK	DZ	DI	c	fz	z	s
SK 7..07	ø 550	197	237	ø 500	ø 450	ø 308	28	5	8	M16
SK 8..07	ø 550	197	237	ø 500	ø 450	ø 308	28	5	8	M16
SK 9..07	ø 660	253	297,5	ø 600	ø 550	ø 434	35	8	8	M24
SK 10..07	ø 660	253	297,5	ø 600	ø 550	ø 434	35	8	8	M24
SK 11..07	ø 730	280	300	ø 680	ø 580	ø 420	40	5	12	M24
SK 12..07	ø 840	315	304	ø 760	ø 650	ø 470	50	5	12	M30
SK 13..07	ø 960	353	375	ø 880	ø 750	ø 530	50	5	16	M30
SK 15..07	ø1100	395	435	ø 980	ø900	ø600	60	10	16	M36

** ⇨📖 65

SK ..07
FK

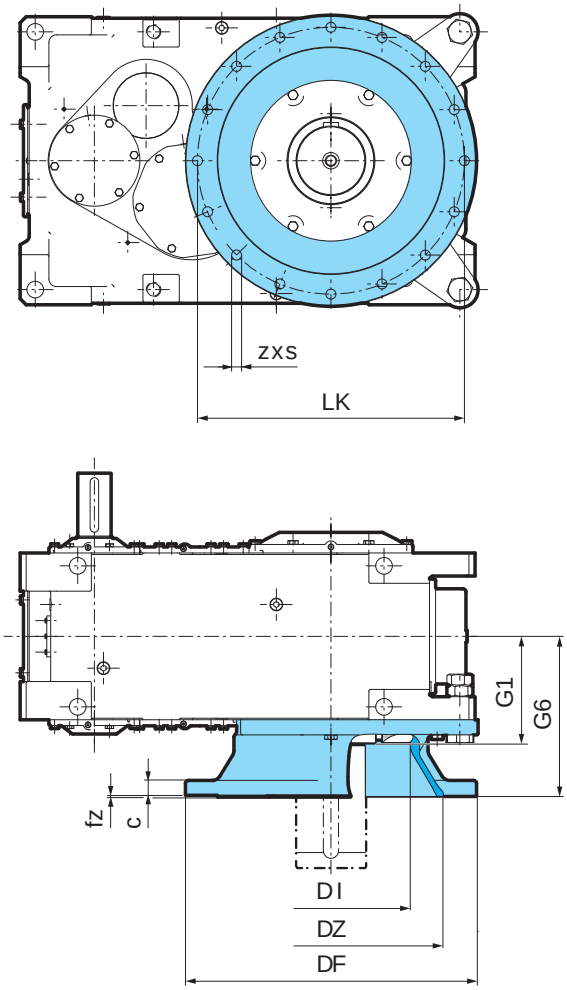

⇨ 📖 56

FK	DF	G1	G6	LK	DZ	DI	c	fz	z	s
SK 7..07	ø 550	197	237	ø 500	ø 450	ø 308	28	5	8	ø 18
SK 8..07	ø 550	197	237	ø 500	ø 450	ø 308	28	5	8	ø 18
SK 9..07	ø 660	253	297,5	ø 600	ø 550	ø 434	35	8	8	ø 26
SK 10..07	ø 660	253	297,5	ø 600	ø 550	ø 434	35	8	8	ø 26
SK 11..07	ø 730	280	420	ø 680	ø 560	ø 420	40	5	12	ø 26
SK 12..07	ø 840	315	470	ø 760	ø 650	ø 470	50	5	16	ø 33
SK 13..07	ø 960	353	525	ø 880	ø 750	ø 530	50	5	16	ø 33
SK 15..07	- - -	- - -	- - -	- - -	- - -	- - -	- - -	- - -	- - -	- - -

** ⇨ 📖 65

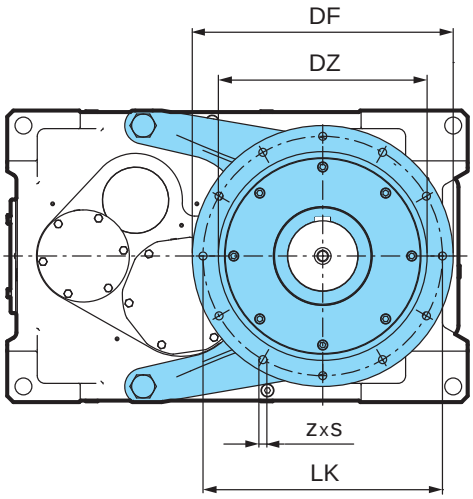

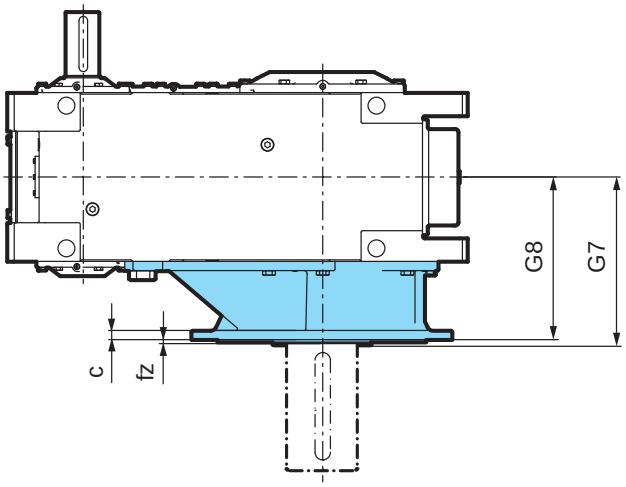

FVL2/3	G7	G8	DF	DZ	LK	fz	c	z	s
SK 7..07	485	477	ø 660	ø 550	ø 600	6	28,5	8	ø 22
SK 8..07	485	477	ø 660	ø 550	ø 600	6	28,5	8	ø 22
SK 9..07	517,5	509,5	ø 660	ø 550	ø 600	8	35	8	ø 26
SK 10..07	517,5	509,5	ø 660	ø 550	ø 600	8	35	8	ø 26
SK 11..07	450	440	ø 675	ø 540	ø 620	5	40	10	ø 22
	465	455	ø 760	ø 600	ø 700	5	50	12	ø 22
SK 12..07	485	470	ø 760	ø 600	ø 700	5	50	12	ø 22
SK 13..07	543	530	ø 850	ø 680	ø 780	5	50	12	ø 26
SK 15..07	645	630	ø 1000	ø 800	ø 930	8	60	16	ø 33

** ⇨ 65

SK ..07
WX

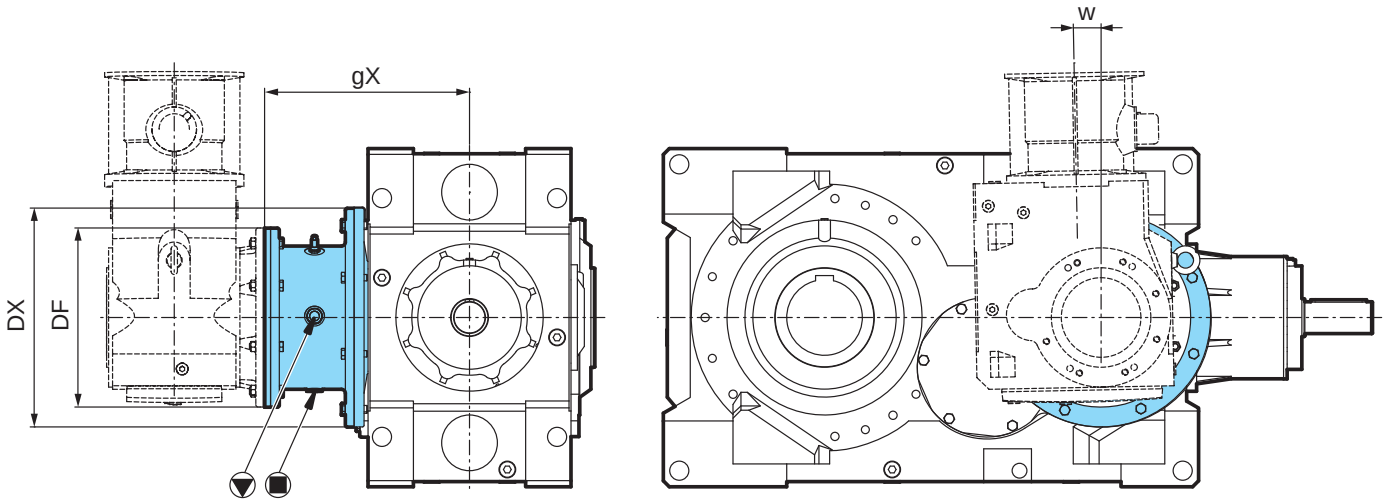

WX		DX	DF	gX	w
SK 7..07	SK 9022.1 VF	ø 350	ø 250	371,5	0°
	SK 9042.1 VF	ø 350	ø 350	371,5	0°
SK 8..07	SK 9022.1 VF	ø 350	ø 250	371,5	0°
	SK 9042.1 VF	ø 350	ø 350	371,5	0°
SK 9..07	SK 9032.1 VF	ø 350	ø 250	404	0°
	SK 9042.1 VF	ø 350	ø 350	404	0°
SK 10..07	SK 9032.1 VF	ø 350	ø 250	404	0°
	SK 9042.1 VF	ø 350	ø 350	404	0°
SK 11..07	SK 9052.1 VF	ø 450	ø 450	465	1°
	SK 9072.1 VF	ø 450	ø 450	445	1°
SK 12..07	SK 9072.1 VF	ø 550	ø 450	545	1°
	SK 9082.1 VF	ø 550	ø 450	515	1°
SK 13..07	SK 9072.1 VF	ø 550	ø 450	565	1°
	SK 9082.1 VF	ø 550	ø 450	535	1°
SK 15..07	SK 9082.1 VF	ø 550	ø 550	655	1°
	SK 9092.1 VF	ø 550	ø 660	620	1°

** ⇨ 📖 65

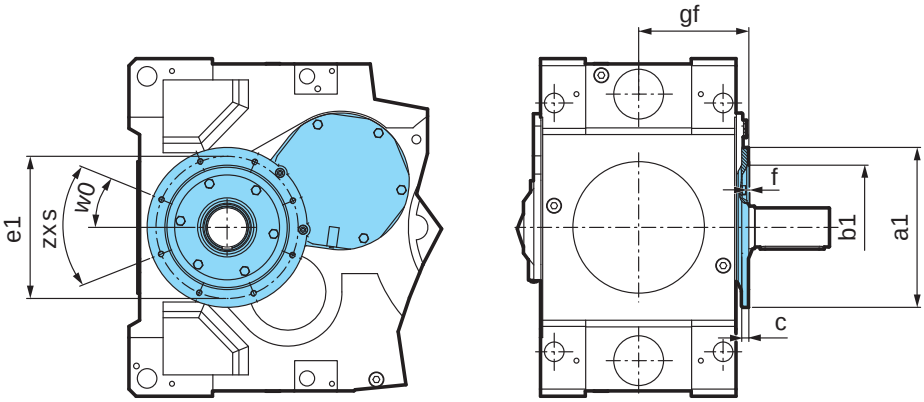

F1	gf	a1	b1	e1	c	f	w0	z x s
SK 7..07	203,5	ø350	ø250	ø300	20	6	22,5	8 x M16
SK 8..07	203,5	ø350	ø250	ø300	20	6	22,5	8 x M16
SK 9..07	236	ø350	ø250	ø300	20	6	22,5	8 x M16
SK 10..07	236	ø350	ø250	ø300	20	6	22,5	8 x M16
SK 11..07	255	ø450	ø350	ø400	20	6,5	22,5 / 27,5	8 x M16
SK 12..07	290	ø550	ø450	ø500	25	6,5	21,5	8 x M16
SK 13..07	310	ø550	ø450	ø500	25	6,5	23	8 x M16
SK 15..07	370	ø550	ø450	ø500	25	6,5	24	8 x M16

** ⇨ 65

SK ..07 D

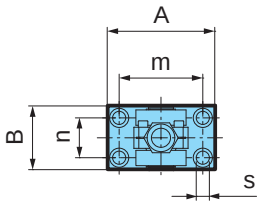

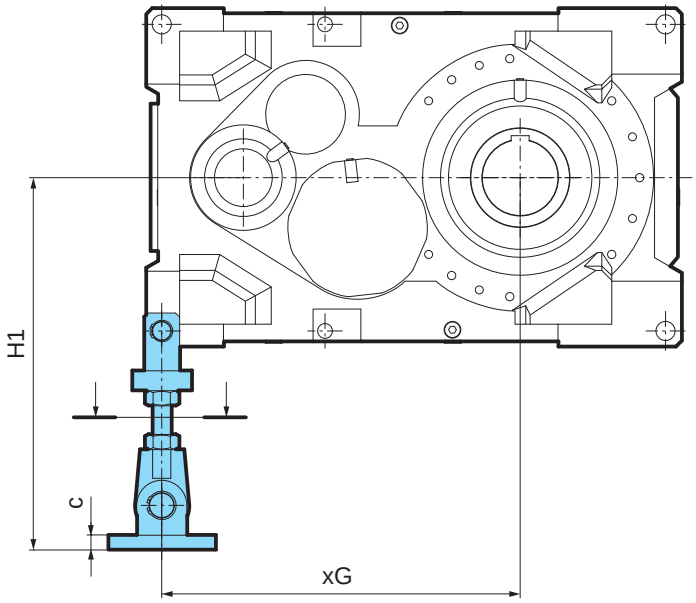

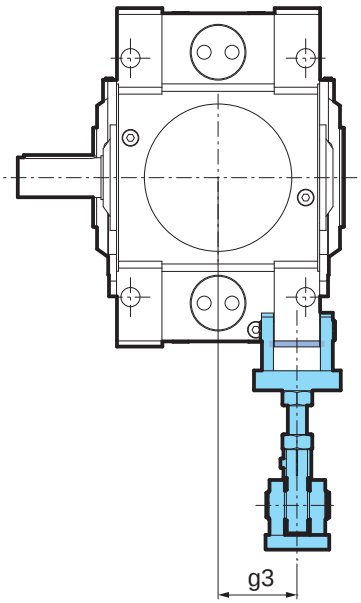

⇨ 🕮 35

D	H1max	H1min	xG	g3	c	A	B	m	n	s
SK 7..07	645	605	550	150,5	25	240	220	180	160	22
SK 8..07	675	635	575	150,5	25	240	220	180	160	22
SK 9..07	715	675	692,5	174	25	240	220	180	160	22
SK 10..07	750	710	722	174	25	240	220	180	160	22
SK 11..07	865	815	800	165	29	240	220	180	160	22
SK 12..07	935	885	900	195	29	290	250	220	180	26
SK 13..07	990	940	1005	210	29	290	250	220	180	26
SK 15..07	1120	1070	1200	247,5	39	330	300	250	220	33

** ⇨🕮 65

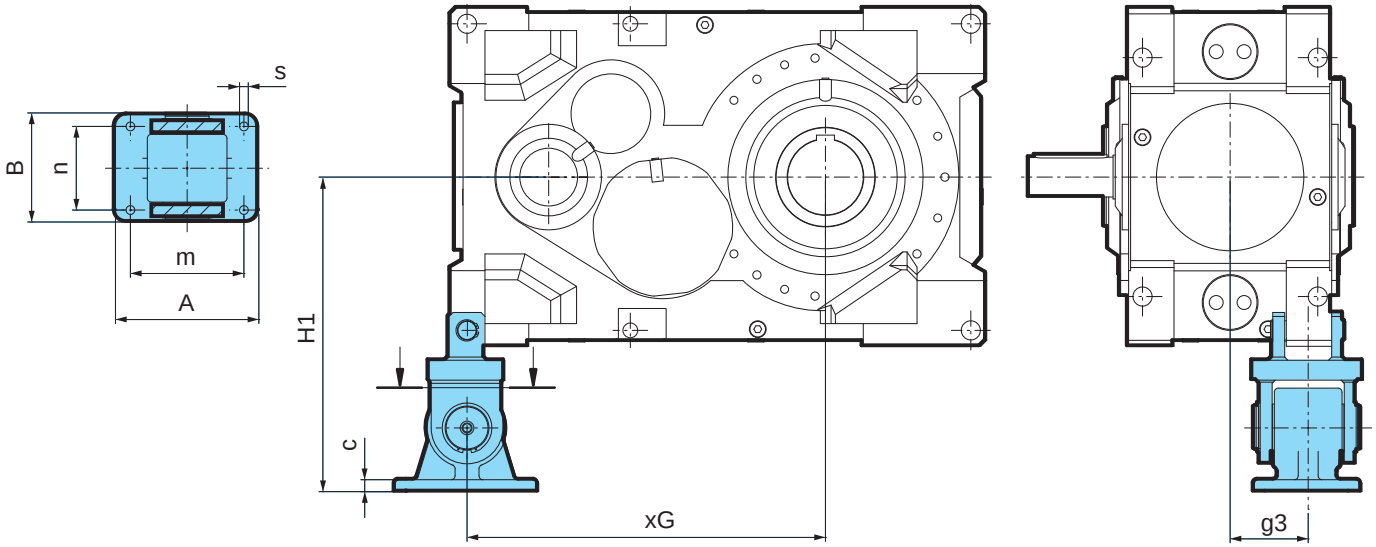

⇨ 📖 39

ED	H1	xG	g3	c	A	B	m	n	s
SK 7..07	490	550	150,5	22	200	160	160	120	22
SK 8..07	520	575	150,5	22	200	160	160	120	22
SK 9..07	655	692,5	174	25	200	200	140	140	22
SK 10..07	690	722	174	25	200	200	140	140	22
SK 11..07	740	800	167,5	30	360	270	285	210	22
SK 12..07	790	900	196	30	360	270	285	210	22
SK 13..07	890	1005	210	40	400	320	310	230	33
SK 15..07	980	1200	245,5	40	400	320	310	230	33

** ⇨📖 65

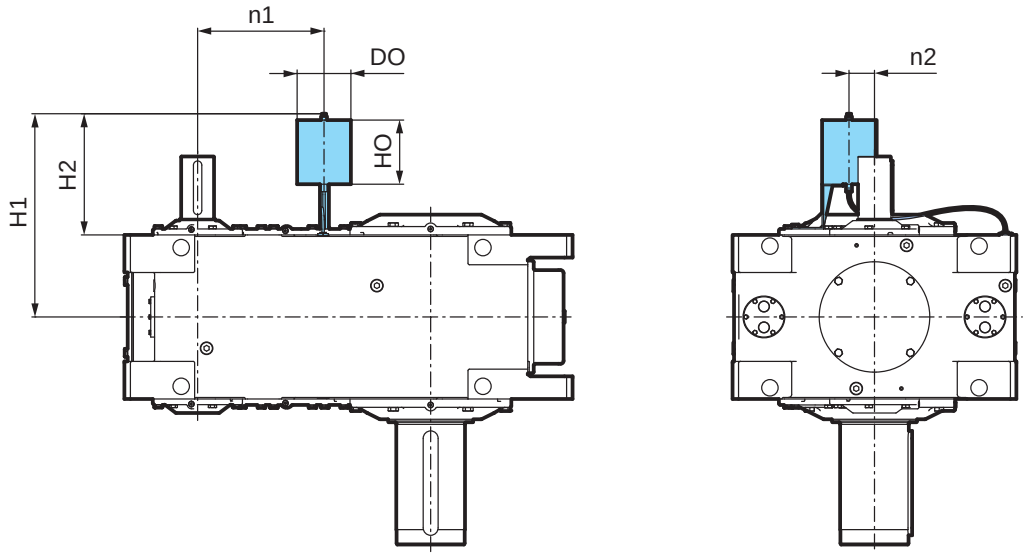

⇨ 📖 48

OA (M5)	DO	HO	H1	H2	n1	n2
SK 11..07	ø 180	215	625	406	335	70
SK 12..07	ø 180	215	660	406	375	75
SK 13..07	ø 180	215	680	406	425	85
SK 15..07	ø 180	215	735	406	500	100

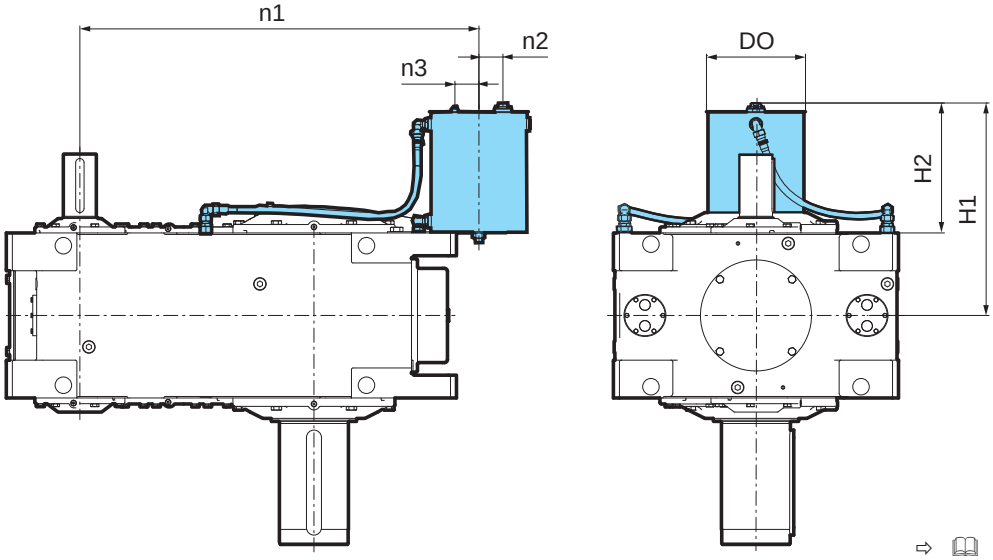

⇨ 📖 48

OT (M5)	DO	HO	H1	H2	n1	n2	n3
SK 11..07	ø 190	400	645	425	1060	80	80
SK 12..07	ø 330	400	730	477	1185	80	80
SK 13..07	ø 330	400	810	535	1330	80	80
SK 15..07	ø 330	400	965	636	1580	80	80

** ⇨📖 65

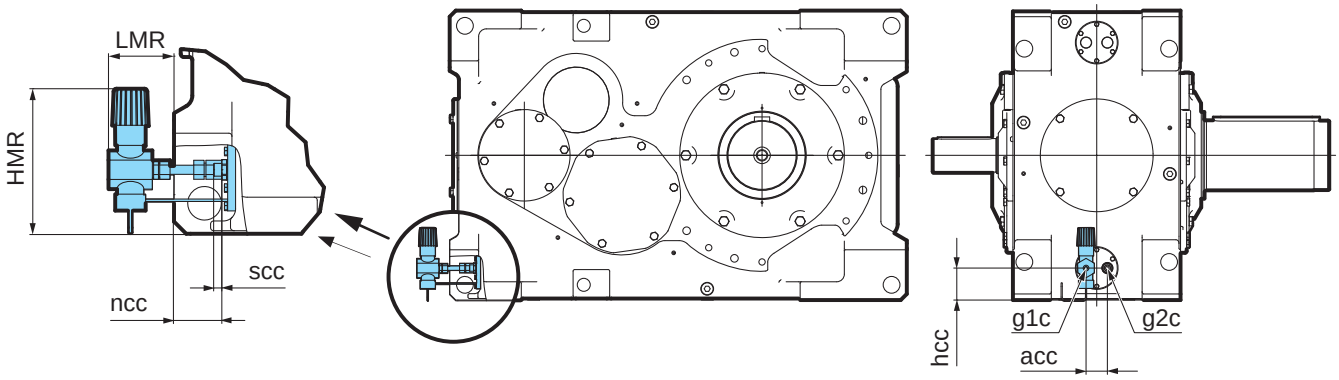

⇨ 📖 50

CC	g1c	g2c	scc	acc	hcc	ncc	HMR	LMR
SK 11..07	G 1/2	G 1/2	13	70	90	62	238	108
SK 12..07	G 1/2	G 1/2	13	70	110	70	238	108
SK 13..07	G 1/2	G 1/2	13	70	100	78	238	108
SK 15..07	G 1/2	G 1/2	13	70	110	93	238	108

** ⇨📖 65

SK ..07
CS1

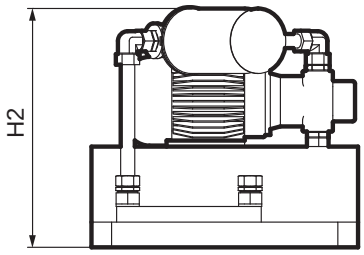

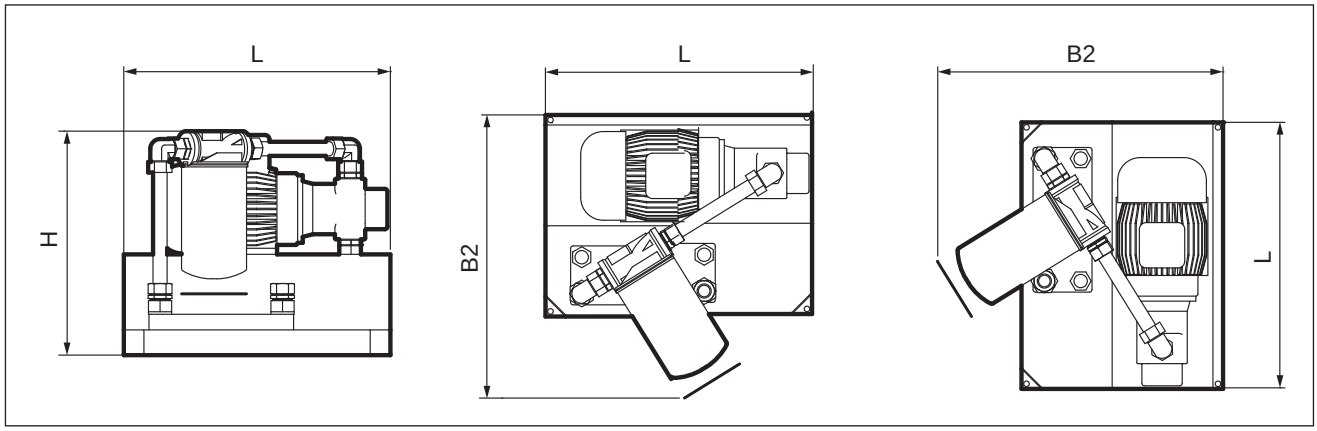

⇨ 📖 51

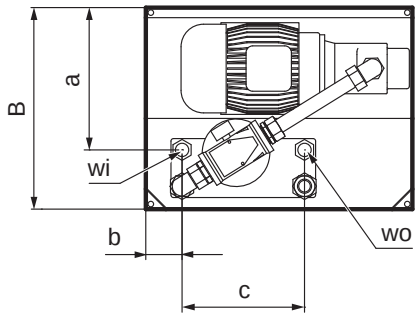

CS1	L	B	B2	H	H2	a	b	c	wi	wo
A	480	420	500	400	430	250	80	278	G 1/2	G 1/2
B	520	394	530	431	450	287	175,5	234	G 3/4	G 3/4
C	520	394	530	431	450	287	175,5	234	G 3/4	G 3/4
D	530	450	570	450	480	282	70	243	G 3/4	G 3/4
E	530	450	570	450	480	282	70	243	G 3/4	G 3/4
F	530	450	570	450	480	282	70	243	G 3/4	G 3/4
G	600	550	650	500	530	340	50	320	G 1	G 1
H	600	550	650	500	530	340	50	320	G 1	G 1

** ⇨📖 65

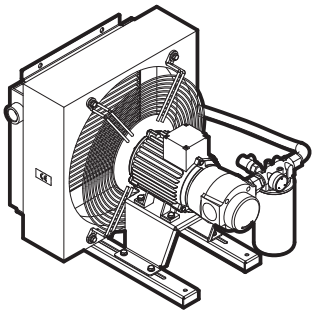

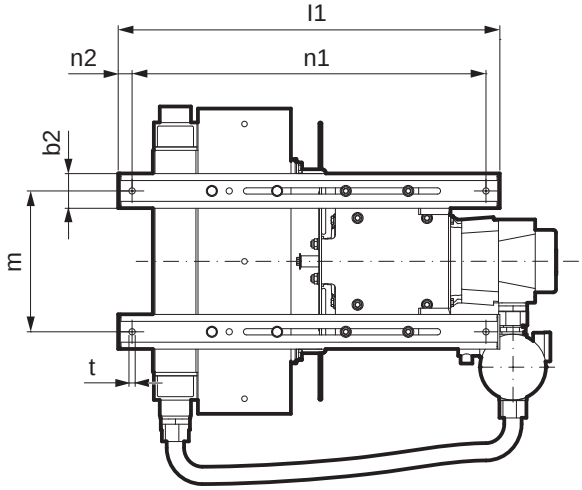

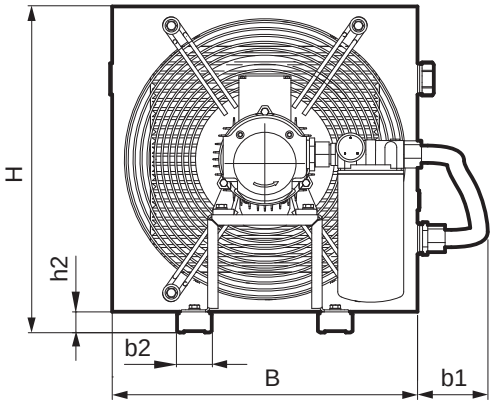

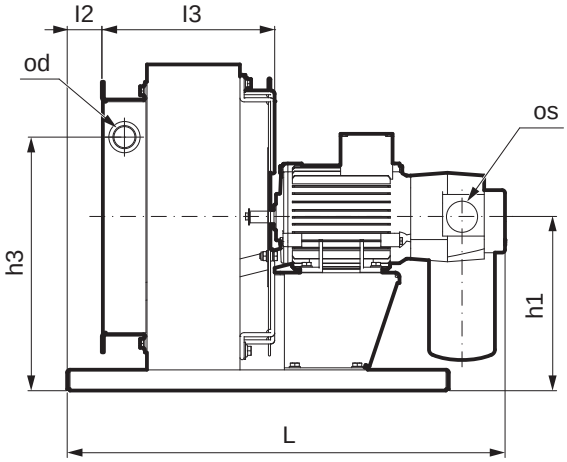

⇨ 📖 52

CS2	L	l1	l2	l3	B	b1	b2	H	h1	h2	h3	n1	n2	m	t	os	od
A	650		50		440	144		395	250			610	20	203	ø14	G1 1/2	G1
B	632	550	50	215	440	103	50	470	262	30	136	510	20	203	ø9	G1 1/2	G1
C	632	550	50	215	440	103	50	470	262	30	136	510	20	203	ø9	G1 1/2	G1
D	718	650	70	265	580	104	50	470	322	30	204	610	20	356	ø14	G1 1/2	G1
E	718	650	70	265	580	104	50	470	322	30	204	610	20	356	ø14	G1 1/2	G1
F	718	650	70	265	580	104	50	470	322	30	204	610	20	356	ø14	G1 1/2	G1
G	832	650	70	343	692	99	50	866	450	30	196	610	20	356	ø14	G1 1/2	G1 1/4
H	832	650	70	343	692	99	50	866	450	30	196	610	20	356	ø14	G1 1/2	G1 1/4

** ⇨📖 65

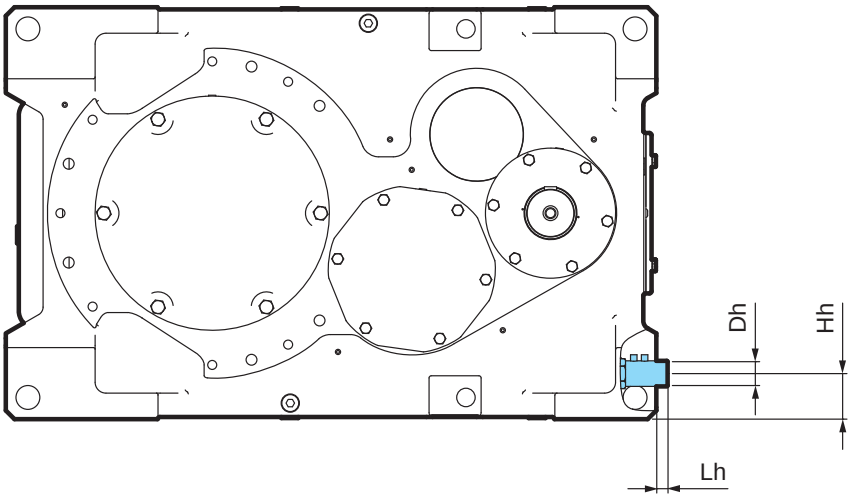

⇨ 📖 54

OH	Dh	Hh	Lh
SK 11..07	ø 65	90	57
SK 12..07	ø 65	110	49
SK 13..07	ø 65	100	49
SK 15..07	ø 65	110	20

** ⇨📖 65

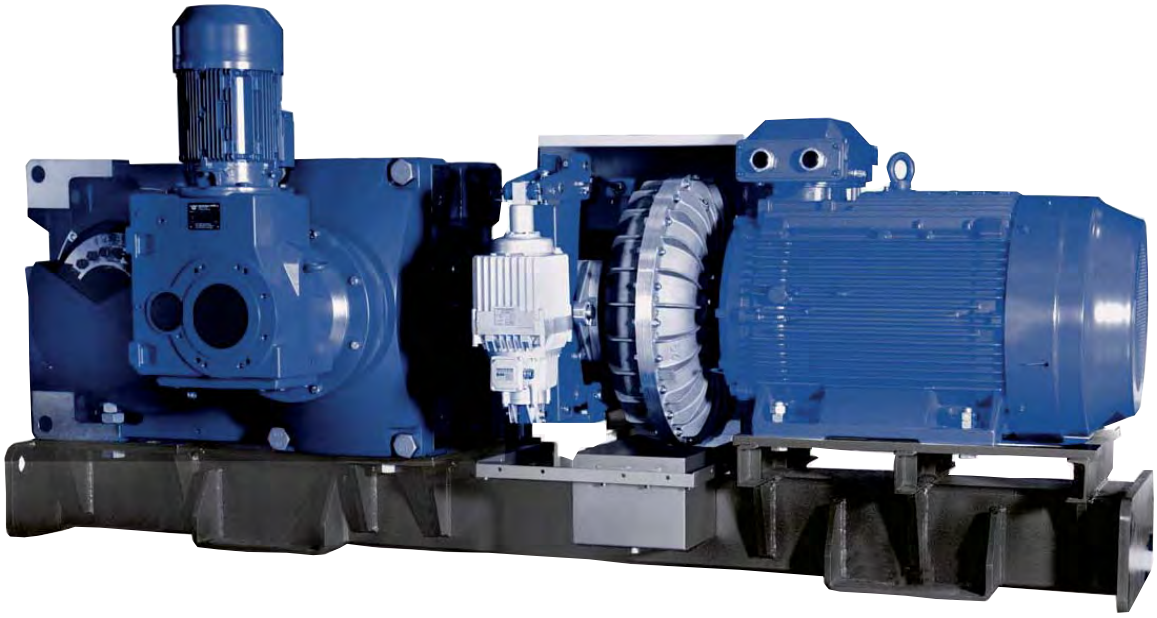

SK ..407
SK ..507
MSK

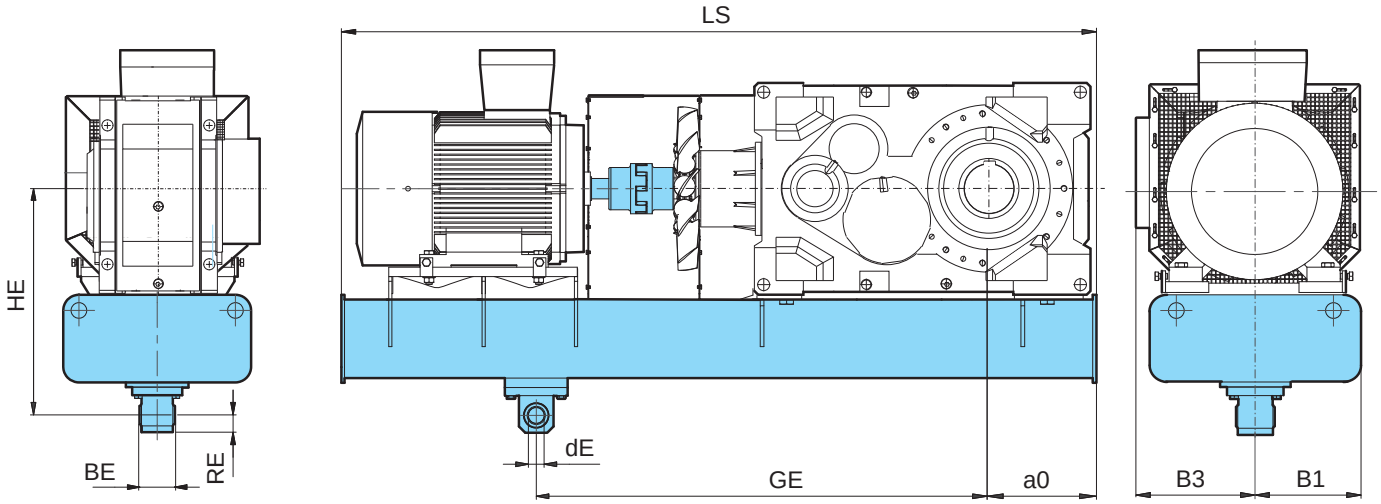

MSK	Motor	LS	B1	B3	a0	HE	GE	BE	RE	dE
SK 7407 SK 7507	132S/4 - 180L/4	1850	315	315	330	710	1200	110	50	50
	200L/4 - 280M/4	2100	315	315	330	710	1200	110	50	50
	315S/4 - 315S/4	2350	315	315	330	710	1200	110	50	50
SK 8407 SK 8507	132S/4 - 160L/4	1850	315	315	355	735	1200	110	50	50
	180M/4 - 250M/4	2100	315	315	355	735	1200	110	50	50
	280S/4 - 315S/4	2350	315	315	355	735	1200	110	50	50
SK 9407 SK 9507	132S/4 - 180L/4	2100	315	400	390	765	1600	110	50	50
	200L/4 - 280M/4	2350	315	400	390	765	1600	110	50	50
	315S/4 - 315S/4	2600	315	400	390	765	1600	110	50	50
SK 10407 SK 10507	132S/4 - 250M/4	2350	315	400	420	800	1800	110	50	50
	280S/4 - 315S/4	2600	315	400	420	800	1800	110	50	50
SK 11407	225S/4 - 280M/4	2600	315	440	430	900	1800	120	90	100
	315S/4 - 315L/4	2850	315	440	430	900	1800	120	90	100
	315LA/4 - 355M/4	3100	315	440	430	900	1800	120	90	100
SK 11507	160M/4 - 225S/4	2350	315	440	430	900	1800	120	90	100
	225M/4 - 280M/4	2600	315	440	430	900	1800	120	90	100

** ⇨ 65

MSK	Motor	LS	B1	B3	a0	HE	GE	BE	RE	dE
SK 12407	225S/4 - 280M/4	2850	310	480	465	1050	2000	120	90	100
	315S/4 - 315L/4	3100	310	480	465	1050	2000	120	90	100
	315LA/4 - 355M/4	3350	310	480	465	1050	2000	120	90	100
	225S/4 - 280M/4	2850	310	480	465	1050	2000	120	90	100
	315S/4 - 315LB/4	3100	310	480	465	1050	2000	120	90	100
	355S/4 - 355M/4	3350	310	480	465	1050	2000	120	90	100
SK 12507	160M/4 - 250M/4	2600	310	480	465	1050	2000	120	90	100
	280S/4 - 280M/4	2850	310	480	465	1050	2000	120	90	100
SK 13407	250M/4 - 280M/4	3100	310	555	535	1128	1800	230	100	124
	315S/4 - 315LB/4	3350	310	555	535	1128	1800	230	100	124
	355S/4 - 355M/4	3600	310	555	535	1128	1800	230	100	124
	250M/4 - 315S/4	3100	310	555	535	1128	1800	230	100	124
	315M/4 - 315LB/4	3350	310	555	535	1128	1800	230	100	124
	355S/4 - 355M/4	3600	310	555	535	1128	1800	230	100	124
SK 13507	180M/4 - 250M/4	2850	310	555	535	1128	1800	230	100	124
	280S/4 - 280M/4	3100	310	555	535	1128	1800	230	100	124
SK 15407	250M/4 - 250M/4	3350	360	605	605	1313	2000	230	100	124
	280S/4 - 315L/4	3600	360	605	605	1313	2000	230	100	124
	315LA/4 - 315LB/4	3850	360	605	605	1313	2000	230	100	124
	355S/4 - 355M/4	4100	360	605	605	1313	2000	230	100	124
	250M/4 - 280S/4	3350	360	605	605	1313	2000	230	100	124
	280M/4 - 315L/4	3600	360	605	605	1313	2000	230	100	124
	315LA/4 - 315LB/4	3850	360	605	605	1313	2000	230	100	124
	355S/4 - 355M/4	4100	360	605	605	1313	2000	230	100	124
SK 15507	225S/4 - 225M/4	3100	360	605	605	1313	2000	230	100	124
	250M/4 - 315S/4	3350	360	605	605	1313	2000	230	100	124
	315M/4 - 315LB/4	3600	360	605	605	1313	2000	230	100	124

** ⇨ 65

SK ..407
SK ..507
MSKB

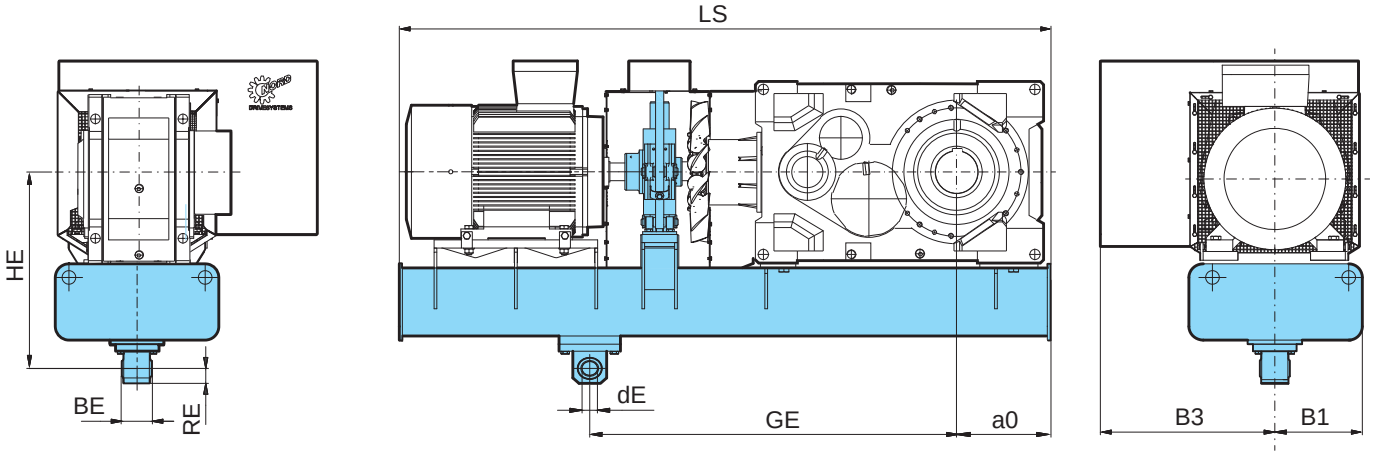

MSKB	Motor	LS	B1	B3	a0	HE	GE	BE	RE	dE
SK 7407 SK 7507	132S/4 - 180L/4	1850	315	315	330	710	1200	110	50	50
	200L/4 - 280M/4	2100	315	315	330	710	1200	110	50	50
	315S/4 - 315S/4	2350	315	315	330	710	1200	110	50	50
SK 8407 SK 8507	132S/4 - 160L/4	1850	315	315	355	735	1200	110	50	50
	180M/4 - 250M/4	2100	315	315	355	735	1200	110	50	50
	280S/4 - 315S/4	2350	315	315	355	735	1200	110	50	50
SK 9407 SK 9507	132S/4 - 180L/4	2100	315	400	390	765	1600	110	50	50
	200L/4 - 280M/4	2350	315	400	390	765	1600	110	50	50
	315S/4 - 315S/4	2600	315	400	390	765	1600	110	50	50
SK 10407 SK 10507	132S/4 - 250M/4	2350	315	400	420	800	1800	110	50	50
	280S/4 - 315S/4	2600	315	400	420	800	1800	110	50	50
SK 11407	225S/4 - 280M/4	2600	315	440	430	900	1800	120	90	100
	315S/4 - 315L/4	2850	315	440	430	900	1800	120	90	100
	315LA/4 - 355M/4	3100	315	440	430	900	1800	120	90	100
SK 11507	160M/4 - 225S/4	2350	315	440	430	900	1800	120	90	100
	225M/4 - 280M/4	2600	315	440	430	900	1800	120	90	100

** ⇨ 65

MSKB	Motor	LS	B1	B3	a0	HE	GE	BE	RE	dE
SK 12407	225S/4 - 280M/4	2850	310	480	465	1050	2000	120	90	100
	315S/4 - 315L/4	3100	310	480	465	1050	2000	120	90	100
	315LA/4 - 355M/4	3350	310	480	465	1050	2000	120	90	100
	225S/4 - 280M/4	2850	310	480	465	1050	2000	120	90	100
	315S/4 - 315LB/4	3100	310	480	465	1050	2000	120	90	100
	355S/4 - 355M/4	3350	310	480	465	1050	2000	120	90	100
SK 12507	160M/4 - 250M/4	2600	310	480	465	1050	2000	120	90	100
	280S/4 - 280M/4	2850	310	480	465	1050	2000	120	90	100
SK 13407	250M/4 - 280M/4	3100	310	555	535	1128	1800	230	100	124
	315S/4 - 315LB/4	3350	310	555	535	1128	1800	230	100	124
	355S/4 - 355M/4	3600	310	555	535	1128	1800	230	100	124
	250M/4 - 315S/4	3100	310	555	535	1128	1800	230	100	124
	315M/4 - 315LB/4	3350	310	555	535	1128	1800	230	100	124
	355S/4 - 355M/4	3600	310	555	535	1128	1800	230	100	124
SK 13507	180M/4 - 250M/4	2850	310	555	535	1128	1800	230	100	124
	280S/4 - 280M/4	3100	310	555	535	1128	1800	230	100	124
SK 15407	250M/4 - 250M/4	3350	360	605	605	1313	2000	230	100	124
	280S/4 - 315L/4	3600	360	605	605	1313	2000	230	100	124
	315LA/4 - 315LB/4	3850	360	605	605	1313	2000	230	100	124
	355S/4 - 355M/4	4100	360	605	605	1313	2000	230	100	124
	250M/4 - 280S/4	3350	360	605	605	1313	2000	230	100	124
	280M/4 - 315L/4	3600	360	605	605	1313	2000	230	100	124
	315LA/4 - 315LB/4	3850	360	605	605	1313	2000	230	100	124
	355S/4 - 355M/4	4100	360	605	605	1313	2000	230	100	124
SK 15507	225S/4 - 225M/4	3100	360	605	605	1313	2000	230	100	124
	250M/4 - 315S/4	3350	360	605	605	1313	2000	230	100	124
	315M/4 - 315LB/4	3600	360	605	605	1313	2000	230	100	124

** ⇨ 65

SK ..407
SK ..507
MST

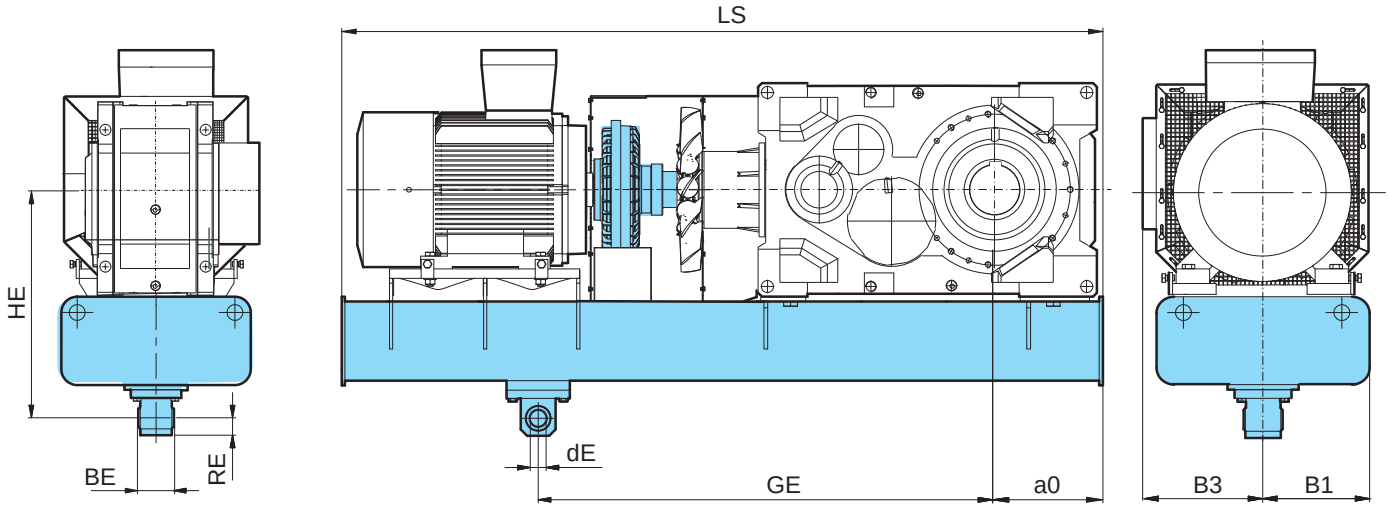

MST	Motor	LS	B1	B3	a0	HE	GE	BE	RE	dE
SK 7407 SK 7507	132S/4 - 180L/4	1850	315	315	330	710	1200	110	50	50
	200L/4 - 280M/4	2100	315	315	330	710	1200	110	50	50
	315S/4 - 315S/4	2350	315	315	330	710	1200	110	50	50
SK 8407 SK 8507	132S/4 - 160L/4	1850	315	315	355	735	1200	110	50	50
	180M/4 - 250M/4	2100	315	315	355	735	1200	110	50	50
	280S/4 - 315S/4	2350	315	315	355	735	1200	110	50	50
SK 9407 SK 9507	132S/4 - 180L/4	2100	315	400	390	765	1600	110	50	50
	200L/4 - 280M/4	2350	315	400	390	765	1600	110	50	50
	315S/4 - 315S/4	2600	315	400	390	765	1600	110	50	50
SK 10407 SK 10507	132S/4 - 250M/4	2350	315	400	420	800	1800	110	50	50
	280S/4 - 315S/4	2600	315	400	420	800	1800	110	50	50
SK 11407	225S/4 - 280M/4	2600	315	440	430	900	1800	120	90	100
	315S/4 - 315L/4	2850	315	440	430	900	1800	120	90	100
	315LA/4 - 355M/4	3100	315	440	430	900	1800	120	90	100
SK 11507	160M/4 - 225S/4	2350	315	440	430	900	1800	120	90	100
	225M/4 - 280M/4	2600	315	440	430	900	1800	120	90	100

** ⇨ 65

MST	Motor	LS	B1	B3	a0	HE	GE	BE	RE	dE
SK 12407	225S/4 - 280M/4	2850	310	480	465	1050	2000	120	90	100
	315S/4 - 315L/4	3100	310	480	465	1050	2000	120	90	100
	315LA/4 - 355M/4	3350	310	480	465	1050	2000	120	90	100
	225S/4 - 280M/4	2850	310	480	465	1050	2000	120	90	100
	315S/4 - 315LB/4	3100	310	480	465	1050	2000	120	90	100
	355S/4 - 355M/4	3350	310	480	465	1050	2000	120	90	100
SK 12507	160M/4 - 250M/4	2600	310	480	465	1050	2000	120	90	100
	280S/4 - 280M/4	2850	310	480	465	1050	2000	120	90	100
SK 13407	250M/4 - 280M/4	3100	310	555	535	1128	1800	230	100	124
	315S/4 - 315LB/4	3350	310	555	535	1128	1800	230	100	124
	355S/4 - 355M/4	3600	310	555	535	1128	1800	230	100	124
	250M/4 - 315S/4	3100	310	555	535	1128	1800	230	100	124
	315M/4 - 315LB/4	3350	310	555	535	1128	1800	230	100	124
	355S/4 - 355M/4	3600	310	555	535	1128	1800	230	100	124
SK 13507	180M/4 - 250M/4	2850	310	555	535	1128	1800	230	100	124
	280S/4 - 280M/4	3100	310	555	535	1128	1800	230	100	124
SK 15407	250M/4 - 250M/4	3350	360	605	605	1313	2000	230	100	124
	280S/4 - 315L/4	3600	360	605	605	1313	2000	230	100	124
	315LA/4 - 315LB/4	3850	360	605	605	1313	2000	230	100	124
	355S/4 - 355M/4	4100	360	605	605	1313	2000	230	100	124
	250M/4 - 280S/4	3350	360	605	605	1313	2000	230	100	124
	280M/4 - 315L/4	3600	360	605	605	1313	2000	230	100	124
	315LA/4 - 315LB/4	3850	360	605	605	1313	2000	230	100	124
	355S/4 - 355M/4	4100	360	605	605	1313	2000	230	100	124
SK 15507	225S/4 - 225M/4	3100	360	605	605	1313	2000	230	100	124
	250M/4 - 315S/4	3350	360	605	605	1313	2000	230	100	124
	315M/4 - 315LB/4	3600	360	605	605	1313	2000	230	100	124

** ⇨ 65

SK ..407
SK ..507
MSTB

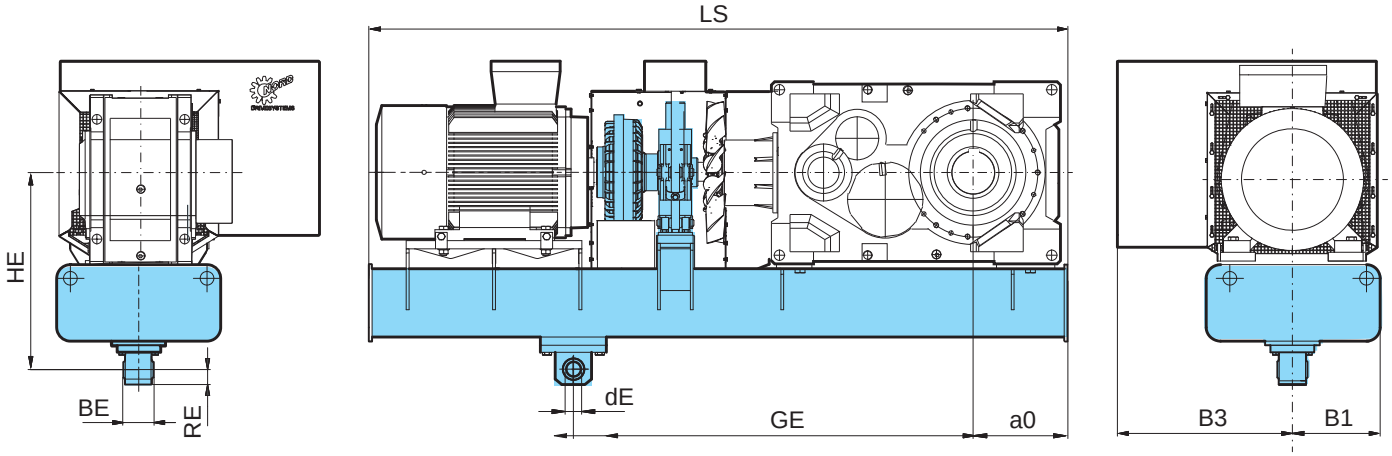

MSTB	Motor	LS	B1	B3	a0	HE	GE	BE	RE	dE
SK 7407 SK 7507	132S/4 - 180L/4	1850	315	315	330	710	1200	110	50	50
	200L/4 - 280M/4	2100	315	315	330	710	1200	110	50	50
	315S/4 - 315S/4	2350	315	315	330	710	1200	110	50	50
SK 8407 SK 8507	132S/4 - 160L/4	1850	315	315	355	735	1200	110	50	50
	180M/4 - 250M/4	2100	315	315	355	735	1200	110	50	50
	280S/4 - 315S/4	2350	315	315	355	735	1200	110	50	50
SK 9407 SK 9507	132S/4 - 180L/4	2100	315	400	390	765	1600	110	50	50
	200L/4 - 280M/4	2350	315	400	390	765	1600	110	50	50
	315S/4 - 315S/4	2600	315	400	390	765	1600	110	50	50
SK 10407 SK 10507	132S/4 - 250M/4	2350	315	400	420	800	1800	110	50	50
	280S/4 - 315S/4	2600	315	400	420	800	1800	110	50	50
SK 11407	225S/4 - 280M/4	2600	315	440	430	900	1800	120	90	100
	315S/4 - 315L/4	2850	315	440	430	900	1800	120	90	100
	315LA/4 - 355M/4	3100	315	440	430	900	1800	120	90	100
SK 11507	160M/4 - 225S/4	2350	315	440	430	900	1800	120	90	100
	225M/4 - 280M/4	2600	315	440	430	900	1800	120	90	100

** ⇨ 65

MSTB	Motor	LS	B1	B3	a0	HE	GE	BE	RE	dE
SK 12407	225S/4 - 280M/4	2850	310	480	465	1050	2000	120	90	100
	315S/4 - 315L/4	3100	310	480	465	1050	2000	120	90	100
	315LA/4 - 355M/4	3350	310	480	465	1050	2000	120	90	100
	225S/4 - 280M/4	2850	310	480	465	1050	2000	120	90	100
	315S/4 - 315LB/4	3100	310	480	465	1050	2000	120	90	100
	355S/4 - 355M/4	3350	310	480	465	1050	2000	120	90	100
SK 12507	160M/4 - 250M/4	2600	310	480	465	1050	2000	120	90	100
	280S/4 - 280M/4	2850	310	480	465	1050	2000	120	90	100
SK 13407	250M/4 - 280M/4	3100	310	555	535	1128	1800	230	100	124
	315S/4 - 315LB/4	3350	310	555	535	1128	1800	230	100	124
	355S/4 - 355M/4	3600	310	555	535	1128	1800	230	100	124
	250M/4 - 315S/4	3100	310	555	535	1128	1800	230	100	124
	315M/4 - 315LB/4	3350	310	555	535	1128	1800	230	100	124
	355S/4 - 355M/4	3600	310	555	535	1128	1800	230	100	124
SK 13507	180M/4 - 250M/4	2850	310	555	535	1128	1800	230	100	124
	280S/4 - 280M/4	3100	310	555	535	1128	1800	230	100	124
SK 15407	250M/4 - 250M/4	3350	360	605	605	1313	2000	230	100	124
	280S/4 - 315L/4	3600	360	605	605	1313	2000	230	100	124
	315LA/4 - 315LB/4	3850	360	605	605	1313	2000	230	100	124
	355S/4 - 355M/4	4100	360	605	605	1313	2000	230	100	124
	250M/4 - 280S/4	3350	360	605	605	1313	2000	230	100	124
	280M/4 - 315L/4	3600	360	605	605	1313	2000	230	100	124
	315LA/4 - 315LB/4	3850	360	605	605	1313	2000	230	100	124
	355S/4 - 355M/4	4100	360	605	605	1313	2000	230	100	124
SK 15507	225S/4 - 225M/4	3100	360	605	605	1313	2000	230	100	124
	250M/4 - 315S/4	3350	360	605	605	1313	2000	230	100	124
	315M/4 - 315LB/4	3600	360	605	605	1313	2000	230	100	124

** ⇨ 65

SK ..407
SK ..507
MFK

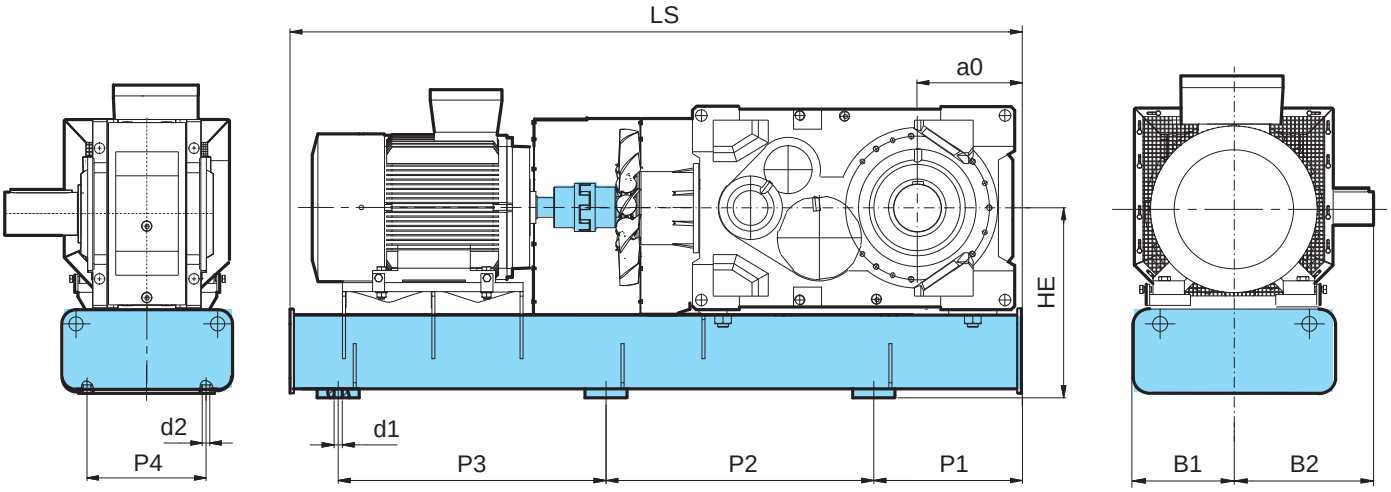

MFK	Motor	LS	B1	B2	a0	HE	P1	P2	P3	P4	d1	d2
SK 7407 SK 7507	132S/4 - 160M/4	1850	400	452	355	620	270	655	655	290	40	22
	160L/4 - 250M/4	2100	400	452	355	620	270	780	780	290	40	22
	280S/4 - 315L/4	2350	400	452	355	620	270	905	905	290	40	22
SK 8407 SK 8507	132S/4 - 132M/4	1850	400	452	385	650	270	655	655	350	40	22
	160M/4 - 225M/4	2100	400	452	385	650	270	780	780	350	40	22
	250M/4 - 315M/4	2350	400	452	385	650	270	905	905	350	40	22
	315MA/4 - 315L/4	2600	400	452	385	650	270	1030	1030	350	40	22
SK 9407 SK 9507	132S/4 - 180L/4	2100	400	557	390	680	270	780	780	350	40	22
	200L/4 - 280M/4	2350	400	557	390	680	270	905	905	350	40	22
	315S/4 - 315L/4	2600	400	557	390	680	270	1030	1030	350	40	22
SK 10407 SK 10507	132S/4 - 160M/4	2100	400	557	425	715	270	780	780	350	40	22
	160L/4 - 250M/4	2350	400	557	425	715	270	905	905	350	40	22
	280S/4 - 315L/4	2600	400	557	425	715	270	1030	1030	350	40	22
SK 11407	225S/4 - 280M/4	2600	400	580	430	740	270	1030	1030	350	45	26
	315S/4 - 315L/4	2850	400	580	430	740	270	1155	1155	350	45	26
	315LA/4 - 355M/4	3100	400	580	430	740	270	1280	1280	350	45	26
SK 11507	160M/4 - 225S/4	2350	400	580	430	740	270	905	905	350	45	26
	225M/4 - 280M/4	2600	400	580	430	740	270	1030	1030	350	45	26

** ⇨ 65

MFK	Motor	LS	B1	B2	a0	HE	P1	P2	P3	P4	d1	d2
SK 12407	225S/4 - 280M/4	2850	355	665	465	890	270	1155	1155	500	45	26
	315S/4 - 315L/4	3100	355	665	465	890	270	1280	1280	500	45	26
	315LA/4 - 355M/4	3350	355	665	465	890	270	1405	1405	500	45	26
SK 12507	160M/4 - 160M/4	2350	355	665	465	890	270	905	905	500	45	26
	160L/4 - 250M/4	2600	355	665	465	890	270	1030	1030	500	45	26
	280S/4 - 280M/4	2850	355	665	465	890	270	1155	1155	500	45	26
SK 13407	250M/4 - 280M/4	3100	355	763	535	940	300	1250	1250	500	45	26
	315S/4 - 315LB/4	3350	355	763	535	940	300	1375	1375	500	45	26
	355S/4 - 355M/4	3600	355	763	535	940	300	1500	1500	500	45	26
SK 13507	180M/4 - 250M/4	2850	355	763	535	940	300	1125	1125	500	45	26
	280S/4 - 280M/4	3100	355	763	535	940	300	1250	1250	500	45	26
SK 15407	250M/4 - 250M/4	3350	400	805	605	1125	300	1375	1375	500	45	26
	280S/4 - 315L/4	3600	400	805	605	1125	300	1500	1500	500	45	26
	315LA/4 - 315LB/4	3850	400	805	605	1125	300	1625	1625	500	45	26
	355S/4 - 355M/4	4100	400	805	605	1125	300	1750	1750	500	45	26
SK 15507	225S/4 - 225M/4	3100	400	805	605	1125	300	1250	1250	500	45	26
	250M/4 - 315S/4	3350	400	805	605	1125	300	1375	1375	500	45	26
	315M/4 - 315LB/4	3600	400	805	605	1125	300	1500	1500	500	45	26

** ⇨ 📖 65

SK ..407
SK ..507
MFKB

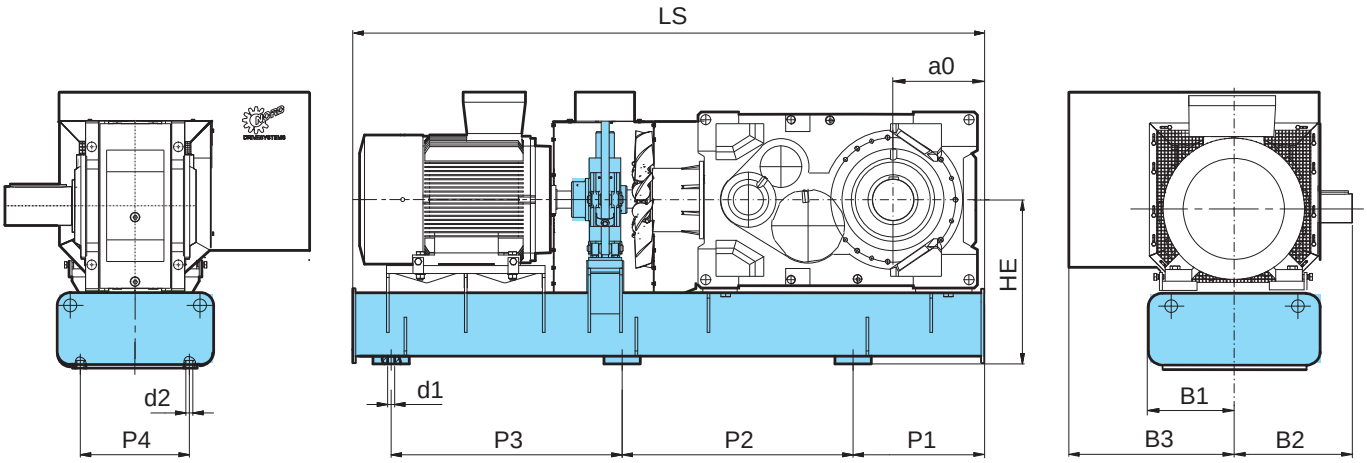

MFKB	Motor	LS	B1	B2	B3	a0	HE	P1	P2	P3	P4	d1	d2
SK 7407 SK 7507	132S/4 - 160M/4	1850	400	452	500	355	620	270	655	655	290	40	22
	160L/4 - 250M/4	2100	400	452	695	355	620	270	780	780	290	40	22
	280S/4 - 315L/4	2350	400	452	860	355	620	270	905	905	290	40	22
SK 8407 SK 8507	132S/4 - 132M/4	1850	400	452	500	385	650	270	655	655	350	40	22
	160M/4 - 225M/4	2100	400	452	655	385	650	270	780	780	350	40	22
	250M/4 - 315M/4	2350	400	452	695	385	650	270	905	905	350	40	22
	315MA/4 - 315L/4	2600	400	452	860	385	650	270	1030	1030	350	40	22
SK 9407 SK 9507	132S/4 - 180L/4	2100	400	557	500	390	680	270	780	780	350	40	22
	200L/4 - 280M/4	2350	400	557	695	390	680	270	905	905	350	40	22
	315S/4 - 315L/4	2600	400	557	860	390	680	270	1030	1030	350	40	22
SK 10407 SK 10507	132S/4 - 160M/4	2100	400	557	500	425	715	270	780	780	350	40	22
	160L/4 - 250M/4	2350	400	557	695	425	715	270	905	905	350	40	22
	280S/4 - 315L/4	2600	400	557	860	425	715	270	1030	1030	350	40	22
SK 11407	225S/4 - 280M/4	2600	400	580	695	430	740	270	1030	1030	350	45	26
	315S/4 - 315L/4	2850	400	580	860	430	740	270	1155	1155	350	45	26
	315LA/4 - 355M/4	3100	400	580	860	430	740	270	1280	1280	350	45	26
SK 11507	160M/4 - 225S/4	2350	400	580	580	430	740	270	905	905	350	45	26
	225M/4 - 280M/4	2600	400	580	695	430	740	270	1030	1030	350	45	26

** ⇨ 📖 65

SK ..407
SK ..507
MFKB

MFKB	Motor	LS	B1	B2	B3	a0	HE	P1	P2	P3	P4	d1	d2
SK 12407	225S/4 - 280M/4	2850	355	665	695	465	890	270	1155	1155	500	45	26
	315S/4 - 315L/4	3100	355	665	860	465	890	270	1280	1280	500	45	26
	315LA/4 - 355M/4	3350	355	665	860	465	890	270	1405	1405	500	45	26
SK 12507	160M/4	2350	355	665	500	465	890	270	905	905	500	45	26
	160L/4 - 250M/4	2600	355	665	695	465	890	270	1030	1030	500	45	26
	280S/4 - 280M/4	2850	355	665	695	465	890	270	1155	1155	500	45	26
SK 13407	250M/4 - 280M/4	3100	355	763	695	535	940	300	1250	1250	500	45	26
	315S/4 - 315LB/4	3350	355	763	860	535	940	300	1375	1375	500	45	26
	355S/4 - 355M/4	3600	355	763	860	535	940	300	1500	1500	500	45	26
SK 13507	180M/4 - 250M/4	2850	355	763	695	535	940	300	1125	1125	500	45	26
	280S/4 - 280M/4	3100	355	763	695	535	940	300	1250	1250	500	45	26
SK 15407	250M/4 - 250M/4	3350	400	805	695	605	1125	300	1375	1375	500	45	26
	280S/4 - 315L/4	3600	400	805	860	605	1125	300	1500	1500	500	45	26
	315LA/4 - 315LB/4	3850	400	805	860	605	1125	300	1625	1625	500	45	26
	355S/4 - 355M/4	4100	400	805	860	605	1125	300	1750	1750	500	45	26
SK 15507	225S/4 - 225M/4	3100	400	805	655	605	1125	300	1250	1250	500	45	26
	250M/4 - 315S/4	3350	400	805	695	605	1125	300	1375	1375	500	45	26
	315M/4 - 315LB/4	3600	400	805	860	605	1125	300	1500	1500	500	45	26

** ⇨ 📖 65

SK ..407
SK ..507
MFT

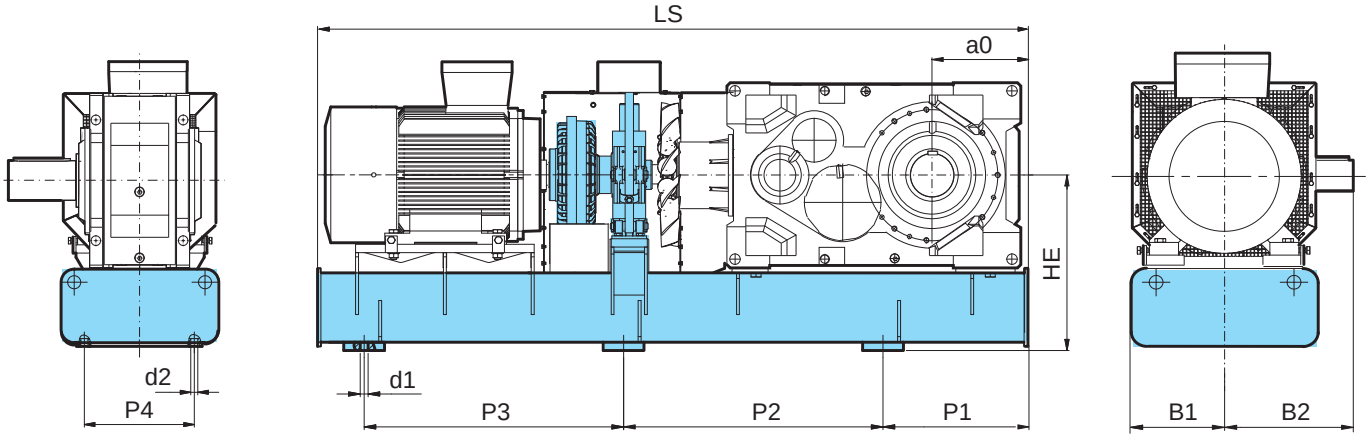

MFT	Motor	LS	B1	B2	a0	HE	P1	P2	P3	P4	d1	d2
SK 7407 SK 7507	132S/4 - 132M/4	1850	400	452	355	620	270	655	655	290	40	22
	160M/4 - 225M/4	2100	400	452	355	620	270	780	780	290	40	22
	250M/4 - 280M/4	2350	400	452	355	620	270	905	905	290	40	22
	315S/4 - 315S/4	2100	400	452	355	620	270	780	780	290	40	22
	315M/4 - 315M/4	2350	400	452	355	620	270	905	905	290	40	22
	315MA/4 - 315L/4	2600	400	452	355	620	270	1030	1030	290	40	22
SK 8407 SK 8507	132S/4 - 132S/4	1850	400	452	385	650	270	655	655	350	40	22
	132M/4 - 200L/4	2100	400	452	385	650	270	780	780	350	40	22
	225S/4 - 315S/4	2350	400	452	385	650	270	905	905	350	40	22
	315M/4 - 315L/4	2600	400	452	385	650	270	1030	1030	350	40	22
SK 9407 SK 9507	132S/4 - 160M/4	2100	400	557	390	680	270	780	780	350	40	22
	160L/4 - 225M/4	2350	400	557	390	680	270	905	905	350	40	22
	250M/4 - 250M/4	2100	400	557	390	680	270	780	780	350	40	22
	280S/4 - 315L/4	2600	400	557	390	680	270	1030	1030	350	40	22
SK 10407 SK 10507	132S/4 - 132M/4	2100	400	557	425	715	270	780	780	350	40	22
	160M/4 - 225M/4	2350	400	557	425	715	270	905	905	350	40	22
	250M/4 - 315M/4	2600	400	557	425	715	270	1030	1030	350	40	22
	315MA/4 - 315L/4	2850	400	557	425	715	270	1155	1155	350	40	22

** ⇨ 📖 65

SK ..407
SK ..507
MFT

MFT	Motor	LS	B1	B2	a0	HE	P1	P2	P3	P4	d1	d2
SK 11407	315S/4 - 250M/4	2600	400	580	430	740	270	1030	1030	350	45	26
	280S/4 - 315L/4	2850	400	580	430	740	270	1155	1155	350	45	26
	315LA/4 - 315LB/4	3100	400	580	430	740	270	1280	1280	350	45	26
	355S/4 - 355M/4	3350	400	580	430	740	270	1405	1405	350	45	26
SK 11507	160M/4 - 180L/4	2350	400	580	430	740	270	905	905	350	45	26
	200L/4 - 280M/4	2600	400	580	430	740	270	1030	1030	350	45	26
SK 12407	225S/4 - 250M/4	2850	355	665	465	890	270	1155	1155	500	45	26
	280S/4 - 315L/4	3100	355	665	465	890	270	1280	1280	500	45	26
	315LA/4 - 315LB/4	3350	355	665	465	890	270	1405	1405	500	45	26
	355S/4 - 355M/4	3600	355	665	465	890	270	1530	1530	500	45	26
SK 12507	160M/4 - 225M/4	2600	355	665	465	890	270	1030	1030	500	45	26
	250M/4 - 280M/4	2850	355	665	465	890	270	1155	1155	500	45	26
SK 13407	250M/4 - 280S/4	3100	355	763	535	940	300	1250	1250	500	45	26
	280M/4 - 315L/4	3350	355	763	535	940	300	1375	1375	500	45	26
	315LA/4 - 355M/4	3600	355	763	535	940	300	1500	1500	500	45	26
SK 13507	180M/4 - 225M/4	2850	355	763	535	940	300	1125	1125	500	45	26
	250M/4 - 280M/4	3100	355	763	535	940	300	1250	1250	500	45	26
SK 15407	250M/4 - 250M/4	3350	400	805	605	1125	300	1375	1375	500	45	26
	280S/4 - 315M/4	3600	400	805	605	1125	300	1500	1500	500	45	26
	315MA/4 - 315LB/4	3850	400	805	605	1125	300	1625	1625	500	45	26
	355S/4 - 355M/4	4100	400	805	605	1125	300	1750	1750	500	45	26
SK 15507	225S/4 - 280M/4	3350	400	805	605	1125	300	1375	1375	500	45	26
	315S/4 - 315L/4	3600	400	805	605	1125	300	1500	1500	500	45	26
	315LA/4 - 315LB/4	3850	400	805	605	1125	300	1625	1625	500	45	26

** ⇨ 📖 65

SK ..407
SK ..507
MFTB

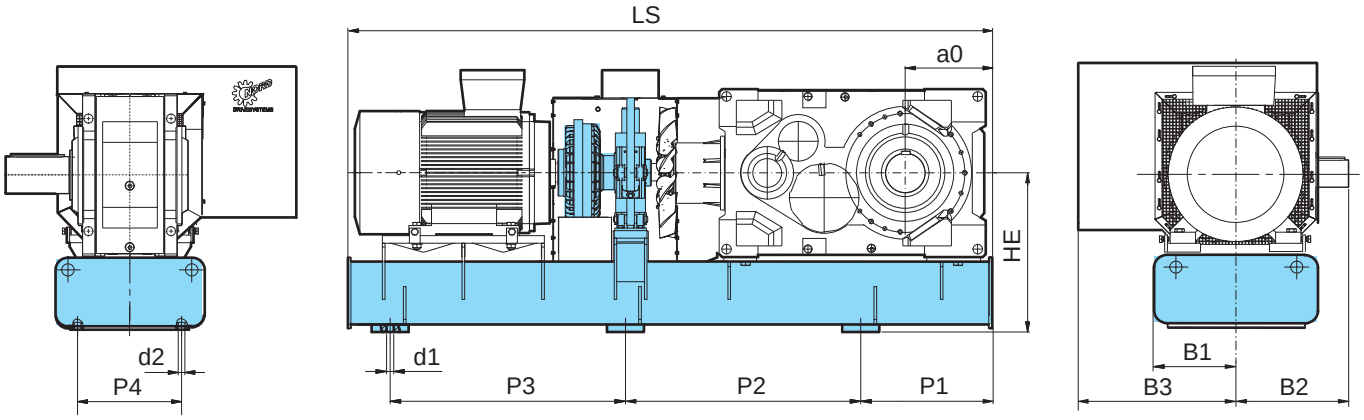

MFTB	Motor	LS	B1	B2	B3	a0	HE	P1	P2	P3	P4	d1	d2
SK 7407 SK 7507	132S/4 - 132M/4	1850	400	452	500	355	620	270	655	655	290	40	22
	160M/4 - 225M/4	2100	400	452	655	355	620	270	780	780	290	40	22
	250M/4 - 315M/4	2350	400	452	695	355	620	270	905	905	290	40	22
	315MA/4 - 315L/4	2600	400	452	860	355	620	270	1030	1030	290	40	22
SK 8407 SK 8507	132S/4 - 132S/4	1850	400	452	500	385	650	270	655	655	350	40	22
	132M/4 - 200L/4	2100	400	452	580	385	650	270	780	780	350	40	22
	225S/4 - 280M/4	2350	400	452	695	385	650	270	905	905	350	40	22
	315S/4 - 315L/4	2600	400	452	860	385	650	270	1030	1030	350	40	22
SK 9407 SK 9507	132S/4 - 160M/4	2100	400	557	500	390	680	270	780	780	350	40	22
	160L/4 - 250M/4	2350	400	557	695	390	680	270	905	905	350	40	22
	280S/4 - 315L/4	2600	400	557	860	390	680	270	1030	1030	350	40	22
SK 10407 SK 10507	132S/4 - 132M/4	2100	400	557	500	425	715	270	780	780	350	40	22
	160M/4 - 225M/4	2350	400	557	655	425	715	270	905	905	350	40	22
	250M/4 - 315M/4	2600	400	557	695	425	715	270	1030	1030	350	40	22
	315MA/4 - 315L/4	2850	400	557	860	425	715	270	1155	1155	350	40	22
SK 11407	225S/4 - 250M/4	2600	400	580	695	430	740	270	1030	1030	350	45	26
	280S/4 - 315L/4	2850	400	580	860	430	740	270	1155	1155	350	45	26
	315LA/4 - 315LB/4	3100	400	580	860	430	740	270	1280	1280	350	45	26
	355S/4 - 355M/4	3350	400	580	860	430	740	270	1405	1405	350	45	26
SK 11507	160M/4 - 180L/4	2350	400	580	500	430	740	270	905	905	350	45	26
	200L/4 - 280M/4	2600	400	580	695	430	740	270	1030	1030	350	45	26

** ⇨ 📖 65

MFTB	Motor	LS	B1	B2	B3	a0	HE	P1	P2	P3	P4	d1	d2
SK 12407	225S/4 - 250M/4	2850	355	665	695	465	890	270	1155	1155	500	45	26
	280S/4 - 315L/4	3100	355	665	860	465	890	270	1280	1280	500	45	26
	315LA/4 - 315LB/4	3350	355	665	860	465	890	270	1405	1405	500	45	26
	355S/4 - 355M/4	3600	355	665	860	465	890	270	1530	1530	500	45	26
SK 12507	160M/4 - 225M/4	2600	355	665	655	465	890	270	1030	1030	500	45	26
	250M/4 - 280M/4	2850	355	665	695	465	890	270	1155	1155	500	45	26
SK 13407	250M/4 - 280S/4	3100	355	763	695	535	940	300	1250	1250	500	45	26
	280M/4 - 315L/4	3350	355	763	860	535	940	300	1375	1375	500	45	26
	315LA/4 - 355M/4	3600	355	763	860	535	940	300	1500	1500	500	45	26
SK 13507	180M/4 - 225M/4	2850	355	763	655	535	940	300	1125	1125	500	45	26
	250M/4 - 280M/4	3100	355	763	695	535	940	300	1250	1250	500	45	26
SK 15407	250M/4 - 250M/4	3350	400	805	695	605	1125	300	1375	1375	500	45	26
	280S/4 - 315M/4	3600	400	805	695	605	1125	300	1500	1500	500	45	26
	315MA/4 - 315LB/4	3850	400	805	860	605	1125	300	1625	1625	500	45	26
	355S/4 - 355M/4	4100	400	805	860	605	1125	300	1750	1750	500	45	26
SK 15507	225S/4 - 280M/4	3350	400	805	695	605	1125	300	1375	1375	500	45	26
	315S/4 - 315L/4	3600	400	805	860	605	1125	300	1500	1500	500	45	26
	315LA/4 - 315LB/4	3850	400	805	860	605	1125	300	1625	1625	500	45	26

** ⇨ 📖 65

An overview of the NORD range

G1000 Fixed speeds
UNICASE housing 50 Hz, 60 Hz

- Helical geared motors
- Parallel geared motors
- Bevel geared motors
- Helical worm geared motors

G1012 NORDBLOC 50 Hz

- Helical geared motors

G1035 Worm gear units

- SI and SMI

G1001 Explosion protected drive units

- Category 2G, Zone 1, Gas

G1022 Explosion protected drive units

- Category 3D, Zone 22, Dust

F3020 frequency inverter SK200E
F3050 frequency inverter SK500E
F3070 frequency inverter NORD SK700E

NORD DRIVESYSTEMS GROUP

Headquarters:

Getriebebau NORD GmbH & Co. KG
Rudolf-Diesel-Straße 1
22941 Bargteheide, Germany
Fon +49 (0) 4532 / 289-0
Fax +49 (0) 4532 / 289-2253
info@nord.com, www.nord.com

Member of the NORD DRIVESYSTEMS Group

NORD DRIVESYSTEMS

G1050 Mat.Nr. 6001102 / 2513