M-Max

H-Max

CPX9000

2.1 NFX9000 Drives
- Product Description V6-T2-2
- Product Selection V6-T2-3

2.2 M-Max Series Adjustable Frequency AC Drives
- Product Description V6-T2-8
- Product Selection V6-T2-9

2.3 SVX9000 Drives
- Product Overview V6-T2-14
- SVX9000 Open Drives
  - Product Description V6-T2-17
  - Product Selection V6-T2-19
- SVX9000 Enclosed Drives
  - Product Description V6-T2-52
  - Product Selection V6-T2-55
- SVX9000 VFD Pump Panels
  - Product Description V6-T2-78
  - Product Selection V6-T2-80

2.4 SPX9000 Drives
- Product Description V6-T2-98
- Product Selection V6-T2-101

2.5 H-Max Series Drives
- Product Overview V6-T2-138
- H-Max Drives
  - Product Description V6-T2-139
  - Product Selection V6-T2-141
- H-Max IntelliPass and IntelliDisconnect Drives
  - Product Description V6-T2-149
  - Product Selection V6-T2-151

2.6 CFX9000 Drives
- Product Description V6-T2-159
- Product Selection V6-T2-168

2.7 CPX9000 Drives
- Product Description V6-T2-192
- Product Selection V6-T2-200

2.8 LCX9000 Drives
- Product Description V6-T2-222
- Product Selection V6-T2-224

2.9 SPA9000/SPN9000/SPI9000 Common DC Bus Drive Products
- Product Description V6-T2-239
- Product Selection V6-T2-243

Learn Online Drawings Online An Eaton Green Solution

NFX9000 Drives

Contents

Description	*Page*
NFX9000 Drives	
Catalog Number Selection	**V6-T2-3**
Product Selection	**V6-T2-3**
Technical Data and Specifications	**V6-T2-4**
Wiring Diagrams	**V6-T2-5**
Dimensions	**V6-T2-7**

Product Description

NFX9000 Adjustable Frequency AC Drives from Eaton's electrical sector are designed to provide adjustable speed control of three-phase motors. These microprocessor-based drives have standard features that can be programmed to tailor the drive's performance to suit a wide variety of application requirements.

The NFX9000 volts-per-hertz product line utilizes a 32-bit microprocessor and insulated gate bipolar transistors (IGBTs) which provide quiet motor operation, high motor efficiency and smooth low speed performance. The size and simplicity of the NFX9000 make it ideal for hassle free installation where size is a primary concern.

Models rated at 240 volts, single- or three-phase, 50/60 Hz are available in sizes ranging from 1/4 to 2 hp. Models rated at 115 volts, single-phase, 50/60 Hz are available in the 1/4 to 1/2 hp size range.

The standard drive includes a digital display, operating and programming keys on the keypad.

The display provides drive monitoring as well as adjustment and diagnostic information. The keys are utilized for digital adjustment and programming of the drive as well as for operator control. Separate terminal blocks for control and power wiring are provided for customer connections. The drives feature RS-485 serial communications.

Features and Benefits

NFX9000 Adjustable Frequency AC Drives

Feature	Customer Benefit
V/Hz control	Provides 150% starting torque and advanced low speed control
Clearly laid out and easy to understand keypad with four-character LED display, four status indicating LEDs, speed potentiometer, and five function keys	Most informative operator's interface in this class of VFD, provided as standard. All parameters, diagnostic information and metering values are displayed with a bright four-character LED display
One analog input, four programmable, intelligent digital inputs, one programmable relay	Provide enhanced application flexibility
Serial communication port (RS-485)	Direct connection to serial communications networks
Single-phase or three-phase input capability on 115/240 Vac rated units	Operate three-phase motor with single-phase supply

Standards and Certifications

- NEMA, IEEE, NEC: Design Standards
- UL Listed
- cUL Listed
- CE Marked

Listed Listed

Catalog Number Selection

NFX9000 Drives

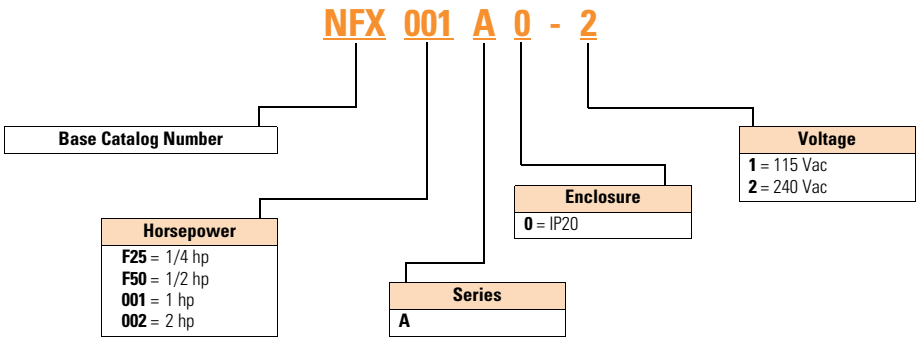

Product Selection

NFX9000

NFX9000 Basic Controller IP20

Description hp ①	Volts ②	Input Ampere Single-/Three-Phase Rating	Continuous Output Ampere Rating	Catalog Number
1/4	90–130	6.0/—	1.6	**NFXF25A0-1**
1/2		9.0/—	2.5	**NFXF50A0-1**
1/4	200–240	4.9/—	1.6	**NFXF25A0-2**
1/2		6.5/—	2.5	**NFXF50A0-2**
1		9.7/—	4.2	**NFX001A0-2**
2		—/9.0	7	**NFX002A0-2**

Notes

① Horsepower ratings are based on the use of a 240V or 480V NEMA B, four- or six-pole squirrel cage induction motor and are for reference only. Units are to be selected such that the motor current is less than or equal to the NFX9000 rated continuous output current.

② For 208V, 380V or 415V applications, select the unit such that the motor current is less than or equal to the NFX9000 rated continuous output current.

Technical Data and Specifications

General Specifications

NFX9000 Drives

Description	Specification
Output Ratings	
Horsepower	90V–132V: 1/4–1/2 hp 200–240V: 1/2–2 hp
Frequency range	0.1–400 Hz
Overload rating	150% for 60 seconds
Frequency resolution	Digital: 0.1 Hz
Frequency accuracy	Digital: ±0.01% of max. frequency Analog: ±0.2% of max. frequency
Undervoltage carryover limit	0.3 to 25 seconds
Motor Performance	
Motor control	V/Hz
Constant torque	Standard
Speed regulation	0.5% of base speed
Input Power	
Voltage at 50/60 Hz ±3 Hz	100V–120V: –10% +10%/single-phase 200V–240V: –10% +5%/single-phase 200V–240V: –10% +5%/three-phase
Displacement power factor	Better than 0.95
Efficiency	Typically greater than 95%
Design Type	
Microprocessor	32-bit
Converter type	Diode
Inverter type	Insulated gate bipolar transistor
Waveform	PWM Volts/Hertz
Environment	
Operating temperature	–10° to 40°C
Humidity	20 to 90% non-condensing
Maximum elevation	1000 meters (3300 ft)
Enclosure	
Standard	Protected chassis (IP20)
Protective Features	
Ground fault	Standard
Overload protection	Standard
Overcurrent	Standard
Overvoltage	Standard
Undervoltage	Standard
Overtemperature	Standard
Overload limit	Standard

Set Up Adjustments, Performance Features, Operator Control and External Interface

Keypad

Description	Specification
Alphanumeric display	Standard, 1 x 4 character
Digital indications	RUN/STOP and FORWARD/REVERSE
Diagnostics	Last three trips with cause
LED status indicators	Four (RUN/STOP and FORWARD/REVERSE)
Operator functions	RUN/STOP, speed control (digital or potentiometer), RESET, MODE keys and ENTER

I/O Terminal Block

Description	Specification
Analog inputs	One input: 0–10 Vdc, 4–20 mA Potentiometer: 1 kohm to 2 kohm Analog voltage: Nominal 10 Vdc (10 kohm input impedance) Analog current: Nominal 4–20 mA (250 ohm)
Digital inputs	Four programmable inputs
Digital outputs	One Form A relay contact

Programmable Parameters

Description	Specification
Out of the box	Factory settings loaded for quick start-up
Accel. and decel.	2 separately adjustable Linear or S Curve times: 0.1–600 seconds
DC injection braking	①
External fault	Terminal input
Jog	Terminal input
Fault reset	STOP/RESET or terminal input
I/O	NO-NC selectable
Jump frequencies	Three (with adjustable width)
Parameter security	Programmable software lock
Preset speeds	Two preset speeds
Reversing	Keypad or terminal
Speed setting	Keypad, terminal or pot
RUN/STOP control	Keypad or terminal
Stop modes	Decel, coast or DC injection

Reliability

Description	Specification
Pretested components	Standard
Surface mount technology	Standard (PCBs)
Computerized testing	Standard
Final test with full load	Standard
Eaton's Engineering Systems and Service	National network of AF drive specialists

Note

① The motor can be electronically stopped in the shortest possible time, without using an optical external braking resistor.

Watts Loss

Catalog Number	Horsepower	Volts	Watts Loss 9 kHz
NFXF25A0-1	1/4	115 Vac	20W
NFXF50A0-1	1/2		20W
NFXF25A0-2	1/4	230 Vac	20W
NFXF50A0-2	1/2		20W
NFX001A0-2	1		38W
NFX002A0-2	2		75W

Wiring Diagrams

Control Terminal Wiring (Factory Settings)

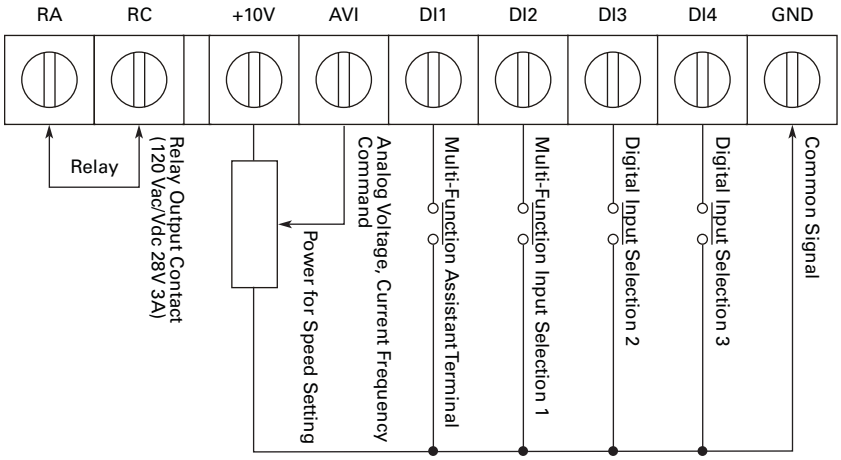

Wire Gauge: 22 – 24 AWG
Torque: 4 Kgf-cm

Basic Wiring Diagram

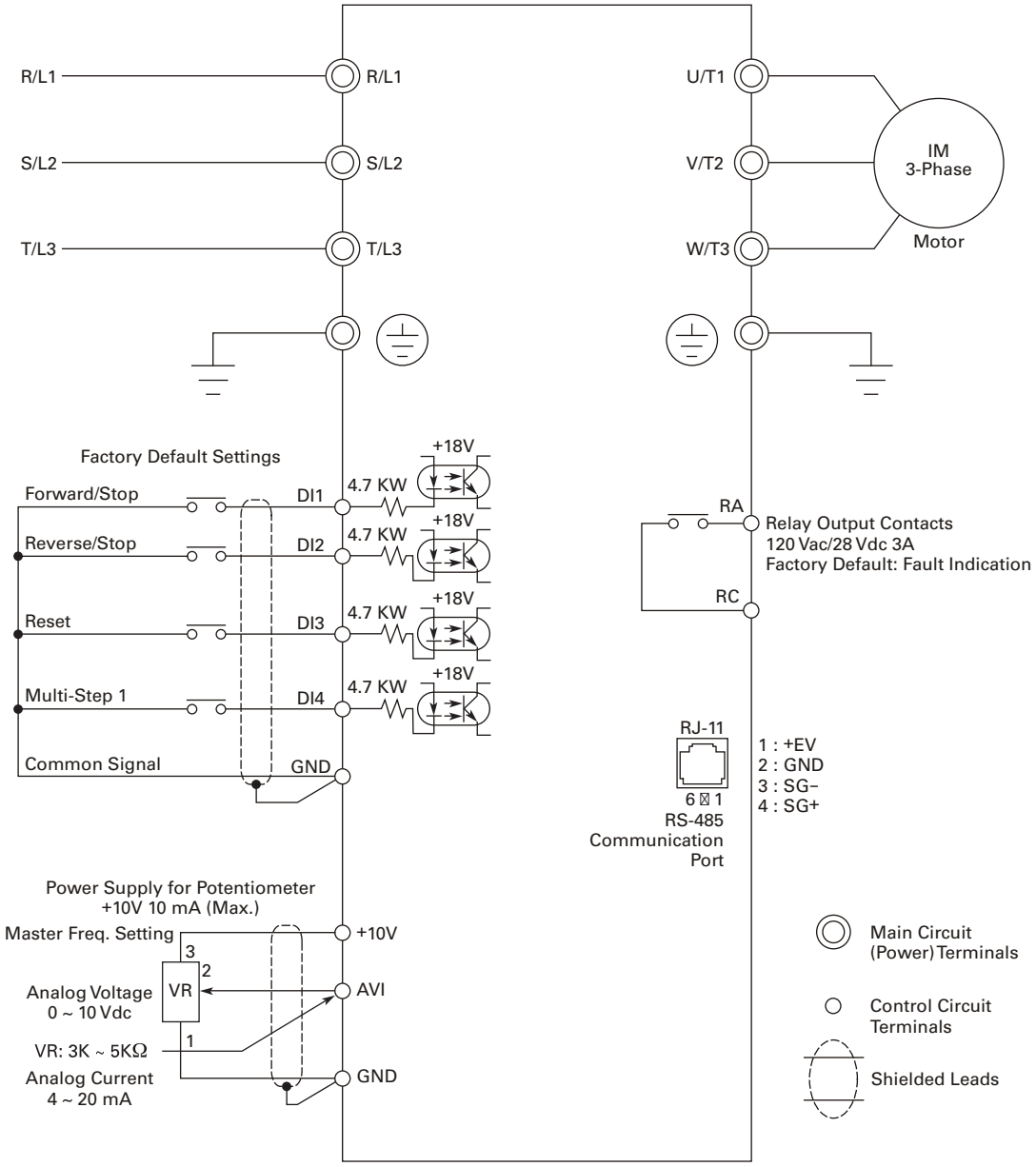

Note: Do not plug a modem or telephone line to the RS-485 communication port, permanent damage may result. Terminals 1 and 2 are the power sources for the optional copy keypad and should not be used while using RS-485 communication.

- Use power terminals R/L1 and S/L2 for single-phase connection to models NFXF25A0-1, NFXF50A0-1, NFXF25A0-2, NFXF50A0-2 or NFX001A0-2.
- Use power terminals R/L1, S/L2 and T/L3 for three-phase connection to models NFXF25A0-2, NFXF50A0-2, NFX001A0-2 or NFX002A0-2.
- Single-phase power must not be used for model NFX002A0-2.

Dimensions

Approximate Dimensions in Inches (mm)

1/4 to 2 hp Drive

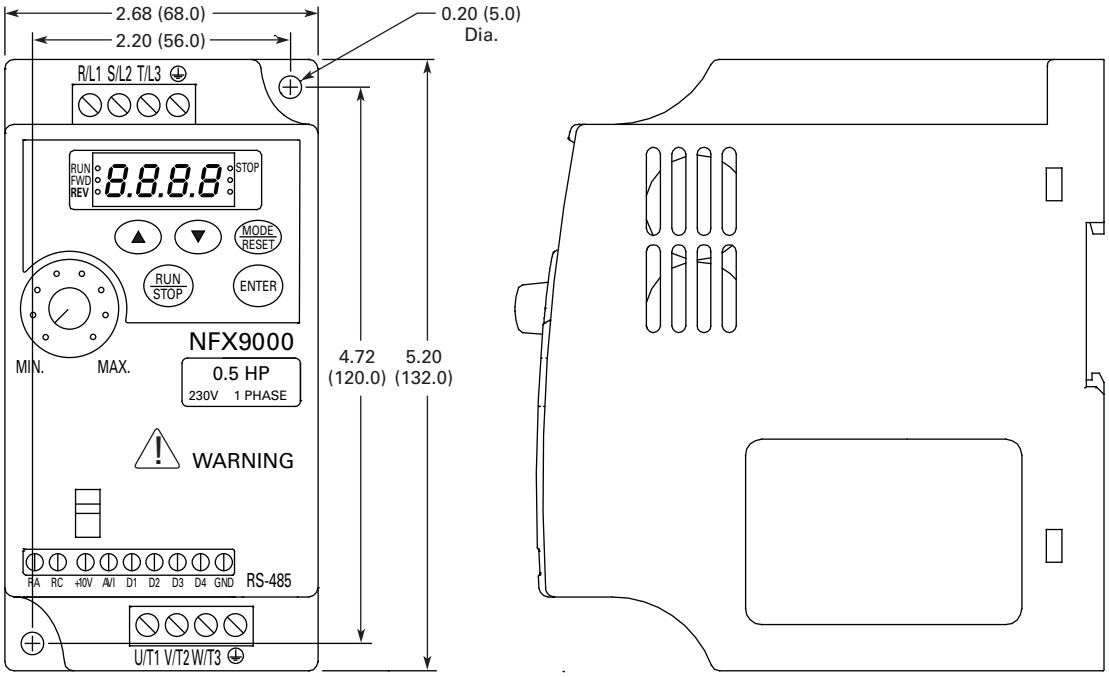

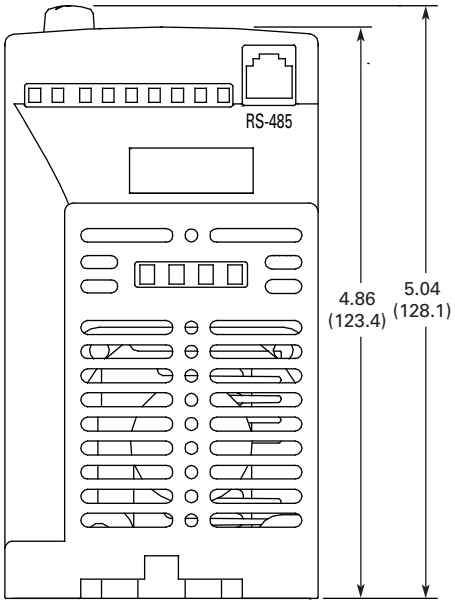

M-Max Series Drives for Machinery Applications

Contents

Description	*Page*
M-Max Series Adjustable Frequency AC Drive	
Catalog Number Selection	**V6-T2-9**
Product Selection	**V6-T2-9**
Accessories	**V6-T2-10**
Technical Data and Specifications	**V6-T2-11**
Dimensions	**V6-T2-13**

Product Description

Eaton's M-Max™ Series Sensorless Vector Adjustable Frequency AC Drives are the next generation of drives specifically engineered for today's machinery applications. These micro-processor-based drives have standard features that can be programmed to tailor the drive's performance to suit a wide variety of application requirements. The M-Max product line uses a 32-bit microprocessor and insulated gate bipolar transistors (IGBTs) that provide quiet motor operation, high motor efficiency, and smooth low-speed performance. The size and simplicity of the M-Max make it ideal for hassle-free installation. Models rated at 575 volts, three-phase, 50/60 Hz are available in sizes ranging from 1 to 7-1/2 hp. Models rated at 480 volts, three-phase, 50/60 Hz are available in sizes ranging from 1/2 to 10 hp. Models rated at 240 volts, single- or three-phase, 50/60 Hz are available in sizes ranging from 1/4 to 3 hp. Models rated at 115 volts, single-phase, 50/60 Hz are available in the 1/4 to 1-1/2 hp size range.

The standard drive includes a digital display, and operating and programming keys on a visually appealing, efficient application programming interface. The display provides drive monitoring, as well as adjustment and diagnostic information. The keys are used for digital adjustment and programming of the drive, as well as for operator control. Separate terminal blocks for control and power wiring are provided for customer connections.

Features

- Ease of use—preset application macros, startup wizard, diagnostic capabilities
- Compact, space-saving design
- Rugged and reliable—150% for one minute, 50C rated, conformal coated boards
- DIN rail and screw mountable
- Side-by-side installation
- Industry leading efficiency delivers energy savings to the customer
- Integrated EMC filters make the unit suitable for commercial and industrial networks
- Available in the enclosure class IP20 as standard, options for IP21 and NEMA® 1
- Brake chopper as standard in three-phase, applications of frames 2 (FS2) and larger
- Temperature-controlled fan
- RS-485/Modbus® as standard
- PID controller as standard
- Several fieldbus options

Standards and Certifications

Product

- Complies with EN61800-3 (2004)

Safety ①

- 61800-5-1
- EN60204-1
- CE
- UL
- cUL
- IEC
- RoHS compliant

EMC (At Default Settings)

- EMC Category C2, C3, and C4 (Level H): With an internal RFI filter option

Note

① See unit nameplate for more detailed approvals.

Catalog Number Selection

MMX 1 1 AA 1D1 F 0 – 0

Description	Phase	Voltage	Software Designation Series	Output Current	EMC Filter	Enclosure Class	Option
MMX = Base catalog number	**1** = Single-phase **3** = Three-phase	**1** = 120V, **4** = 480V **2** = 230V, **5** = 575V	**AA**	**1D6** = 1.6A **010** = 10A	**F** = Filter **N** = No filter	**0** = NEMA 0 or IP20	**0** = Full version

Product Selection

M-Max

M-Max Basic Controller

hp ①	Volts ②	100% Continuous Current I_N (A)	Nominal Input Current (A)	Frame Size	Catalog Number
1/4	100–120V single-phase in 230V three-phase out	1.7	9.2	FS2	**MMX11AA1D7N0-0** ③
1/2		2.4	11.6		**MMX11AA2D4N0-0** ③
3/4		2.8	12.4		**MMX11AA2D8N0-0** ③
1		3.7	15		**MMX11AA3D7N0-0** ③
1-1/2		4.8	16.5	FS3	**MMX11AA4D8N0-0** ③
1/4	200–240V single-phase in 230V three-phase out	1.7	4.2	FS1	**MMX12AA1D7F0-0**
1/2		2.4	5.7		**MMX12AA2D4F0-0**
3/4		2.8	6.6		**MMX12AA2D8F0-0**
1		3.7	8.3	FS2	**MMX12AA3D7F0-0**
1-1/2		4.8	11.2		**MMX12AA4D8F0-0**
2		7	14.1		**MMX12AA7D0F0-0**
3		9.6	15.8	FS3	**MMX12AA9D6F0-0**
1/4	200–240V three-phase in 230V three-phase out	1.7	2.7	FS1	**MMX32AA1D7N0-0** ③
1/2		2.4	3.5		**MMX32AA2D4N0-0** ③
3/4		2.8	3.8		**MMX32AA2D8N0-0** ③
1		3.7	4.3	FS2	**MMX32AA3D7N0-0** ③
1-1/2		4.8	6.8		**MMX32AA4D8N0-0** ③
2		7	8.4		**MMX32AA7D0N0-0** ③
3		11	13.4	FS3	**MMX32AA011N0-0** ③
1/2	380–480V three-phase in 460V three-phase out	1.3	2.2	FS1	**MMX34AA1D3F0-0**
3/4		1.9	2.8		**MMX34AA1D9F0-0**
1		2.4	3.2		**MMX34AA2D4F0-0**
1-1/2		3.3	4	FS2	**MMX34AA3D3F0-0**
2		4.3	5.6		**MMX34AA4D3F0-0**
3		5.6	7.3		**MMX34AA5D6F0-0**
4		7.6	9.6	FS3	**MMX34AA7D6F0-0**
5		9	11.5		**MMX34AA9D0F0-0**
7-1/2		12	14.9		**MMX34AA012F0-0**
10		14	18.7		**MMX34AA014F0-0**
1	575V three-phase in 575V three-phase out	1.7	2.0	FS3	**MMX35AA1D7N0-0** ③
2		2.7	3.6		**MMX35AA2D7N0-0** ③
3		3.9	5.0		**MMX35AA3D9N0-0** ③
5		6.1	7.6		**MMX35AA6D1N0-0** ③
7-1/2		9.0	10.4		**MMX35AA9D0N0-0** ③

Notes

① Horsepower ratings are based on the use of a 240V, 460V, and 575V NEMA B, four- or six-pole squirrel cage induction motor and are for reference only. Units are to be selected such that the motor current is less than or equal to the MMX rated continuous output current.

② For 208V, 380V, or 415V applications, select the unit such that the motor current is less than or equal to the MMX rated continuous output current.

③ For MMX11_, MMX32_, and MMX35_, there are no options for units with filters.

Accessories

M-Max Copy/Paste Module

Description	Catalog Number
Module is plugged onto the front of the drive to provide: upload/download of all parameters, direct link to a PC via USB interface for parameter assignment via MaxConnect software, and copying of parameters for a series of devices or when exchanging devices. No PC required	**MMX-COM-PC**

Kits ①

Description	Catalog Number
Type 1 and IP21 kit for frame 1	**MMX-IP21-FS1**
Type 1 and IP21 kit for frame 2	**MMX-IP21-FS2**
Type 1 and IP21 kit for frame 3	**MMX-IP21-FS3**

Optional Communication Modules

Description	Catalog Number
Communication adapter kit	**MMX-NET-XA**
CANopen network card	**XMX-NET-CO-A**
PROFIBUS DP network card with serial connection	**XMX-NET-PS-A**
PROFIBUS DP network card with Sub-D connection	**XMX-NET-PD-A**
DeviceNet network card	**XMX-NET-DN-A**

Line Reactors ②

Description	Catalog Number
3% Line Reactor, Single-Phase	
1/2 hp, 240V	**K64-000988-8091**
1 hp, 240V	**K64-000988-0120**
2 hp, 240V	**K64-000988-0180**
3 hp, 240V	**K64-000988-0250**
3% Line Reactor, Three-Phase	
1/2 hp, 240V	**K64-000989-2091**
1 hp, 240V	**K64-000989-4091**
2 hp, 240V	**K64-000989-8091**
3 hp, 240V	**K64-000989-0120**
1 hp, 480V	**K64-000989-2091**
2 hp, 480V	**K64-000989-4091**
3 hp, 480V	**K64-000989-4091**
5 hp, 480V	**K64-000989-8091**
7-1/2 hp, 480V	**K64-000989-0180**
10 hp, 480V	**K64-000989-0250**
1 hp, 575V	**K64-000989-2091**
2 hp, 575V	**K64-000989-8091**
3 hp, 575V	**K64-000989-8091**
5 hp, 575V	**K64-000989-4091**
7-1/2 hp, 575V	**K64-000989-0180**
10 hp, 575V	**K64-000989-0180**

Notes

① Type 1 kit provides conduit entry plate.

② Additional input and output reactors are available. Consult Eaton representative for a complete listing.

Technical Data and Specifications

Ratings

M-Max Basic Controller IP20 Standard Ratings

Description	Specification
Protections	
Overcurrent protection	Trip limit 4.0 x I_H instantaneously
Overvoltage protection	115/230V series: 437 Vdc; 400V series: 874 Vdc; 575V series: 1048 Vdc trip level
Undervoltage protection	115/230V series: 183 Vdc; 400V series: 333 Vdc; 575V series: 460 Vdc trip level
Ground fault protection	Ground fault is tested before every start. In case of ground fault in motor or motor cable, only the frequency converter is protected
Overtemperature protection	Yes
Motor overload protection	Yes
Motor stall protection	Yes
Motor underload protection	Yes

Programmable Parameters

Description
Application macros: basic, pump, fan and high load (hoist)
Programmable start/stop and reverse signal logic (sinking or sourcing)
Reference scaling
Programmable start and stop functions
DC-brake at start and stop
Programmable V/Hz curve
Adjustable switching frequency
Autorestart function after fault
Protections and supervisions (all fully programmable; off, warning, fault)
Current signal input fault
External fault
Fieldbus communication
Eight preset speeds
Analog input range selection, signal scaling and filtering
PID controller
Skip frequencies

Specifications

M-Max Series Drives

Description	Specification
Input Ratings	
Input voltage (V_{in})	+10%/–15% (575V units: +15%/–15%)
Input frequency (f_{in})	50/60 Hz (variation up to 45–66 Hz)
Connection to power	Once per minute or less (typical operation)
Output Ratings	
Output voltage	0 to V_{in} ①
Continuous output current	Continuous rated current I_N at ambient temperature max. 122°F (50°C), overload 1.5 x I_N max. 1 min/10 min
Output frequency	0 to 320 Hz
Frequency resolution	0.01 Hz
Initial output current (I_H)	Current 2 x I_N for 2 seconds in every 20-second period Torque depends on motor
Control Characteristics	
Control method	Frequency control (V/Hz) open loop or sensorless vector control
Switching frequency	1.5 to 16 kHz; default 6 kHz
Frequency reference	Analog input: resolution 0.1% (10-bit), accuracy ± 1% V/Hz Panel reference: resolution 0.01 Hz
Field weakening point	30 to 320 Hz
Acceleration time	0 to 3000 sec
Deceleration time	0 to 3000 sec
Braking torque	DC brake: 30% x T_n (without brake option)
Brake Resistor (Minimum Values) ②	
230V Series	FS2 35 ohms and FS3 26 ohms
400V Series	FS2 75 ohms and FS3 54 ohms
575V Series	FS3 103 ohms
Ambient Conditions	
Ambient operating temperature	14°F (–10°C), no frost to 122°F (+50°C): Rated loadability I_N
Storage temperature	–40°F (–40°C) to 158°F (70°C)
Relative humidity	0 to 95% RH, noncondensing, non-corrosive, no dripping water
Air quality	Chemical vapors: IEC 721-3-3, unit in operation, Class 3C2; Mechanical particles: IEC 721-3-3, unit in operation, Class 3S2
Altitude	100% load capacity (no derating) up to 3280 ft (1000m); 1% derating for each 328 ft (100m) above 3280 ft (1000m); max. 6560 ft (2000m)
Vibration	EN 60068-2-6; 3 to 150 Hz, displacement amplitude 1 mm (peak) at 3 to 15.8 Hz, max. acceleration amplitude 1G at 15.8 to 150 Hz
Shock	EN 50178, IEC 68-2-27 UPS Drop test (for applicable UPS weights); storage and shipping: max. 15G, 11 ms (in package)
Enclosure class	IP20

Notes

① Exception: 115V single-phase in, 230V three-phase out.

② Only three-phase FS2 and FS3 drives are equipped with brake chopper circuit.

Standards

I/O Specifications

- Digital inputs DI1–DI6 are freely programmable. The user can assign multiple functions to a single input
- Digital, relay, and analog outputs are freely programmable

Includes:

- Six digital inputs
- Two analog inputs
  - 4–20 mA
  - 0–10V
- One analog output
- One digital output
- Two relay outputs
- RS-485 interface

Reliability

- Pretested components: standard
- Computerized testing: standard
- Final test with full load: standard
- Conformal-coated boards
- 50°C rated
- 150% for one minute/ 10 mm
- 200% for two seconds/ 20 sec.
- Eaton Electrical Services and Systems: national network of AF drive specialists

M-Max I/O Interface

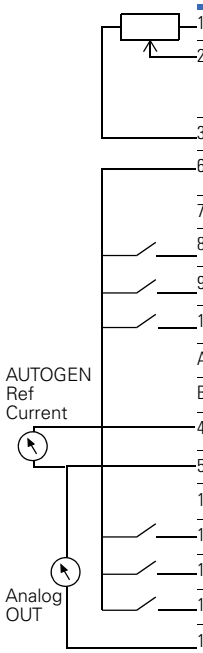

Terminal		Signal	Factory Preset	Description
1	+10V	Ref. output voltage	—	Maximum load 10 mA
2	AI1	Analog signal in 1	Freq. reference P)	0–+10V Ri = 200k ohms [min.]
3	GND	I/O signal ground	—	—
6	24V	24V output for DIs	—	±20%, max. load 50 mA
7	GND	I/O signal ground	—	—
8	DI1	Digital input 1	Start forward P)	0–+30V Ri = 12k ohms min.
9	DI2	Digital input 2	Start reverse P)	—
10	DI3	Digital input 3	Preset speed P)	—
A	A	RS-485 signal A	FB communication	—
B	B	RS-485 signal B	FB communication	—
4	AI2	Analog signal in 2	PI actual value P)	0[4]–20 mA, Ri = 200k ohms
5	GND	I/O signal ground	—	—
13	GND	I/O signal ground	—	—
14	DI4	Digital input 4	Preset speed B1 P)	0–+30V Ri = 12k ohms min.
15	DI5	Digital input 5	Fault reset P)	0–+30V Ri = 12k ohms min.
16	DI6	Digital input 6	Disable PI contr. P)	0–+30V Ri = 12k ohms min.
18	AO	Analog output	Output frequency P)	0(2)–10V, RL = 500 ohms
20	DO	Digital signal out	Active = READY P)	Open collector, max. load 48V/50 mA
22	RO11	Relay out 1	Active = RUN P)	Max. switching load: 250 Vac/2A or 250 Vdc/0.4A
23	RO12			
24	RO21	Relay out 2	Active = FAULT P)	Max. switching load: 250 Vac/2A or 250 Vdc/0.4A
25	RO22			
26	RO23			

Note

P) Parameter-selectable function.

Dimensions

Approximate Dimensions in Inches (mm)

M-Max Drives

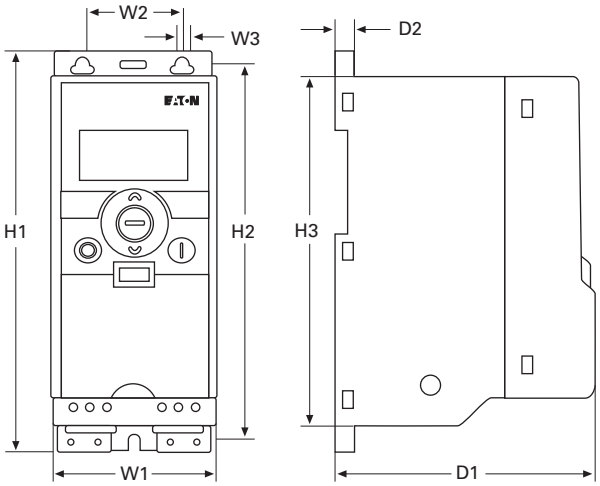

Frame Type	H1	H2	H3	W1	W2	W3	D1	D2	Weight Lbs (kg)
FS1	6.16 (156.5)	5.79 (147.0)	5.40 (137.3)	2.58 (65.5)	1.49 (37.8)	0.17 (4.5)	3.88 (98.5)	0.27 (7.0)	1.213 (0.550)
FS2	7.68 (195.0)	7.20 (183.0)	6.69 (170.0)	3.54 (90.0)	2.46 (62.5)	0.22 (5.5)	4.00 (101.5)	0.27 (7.0)	1.543 (0.699)
FS3	10.33 (262.5)	9.93 (252.3)	9.50 (241.3)	3.94 (100.0)	2.95 (75.0)	0.22 (5.5)	4.27 (108.5)	0.27 (7.0)	2.183 (0.990)

NEMA 1/IP21 M-Max Drives and Communication Adapter Kit

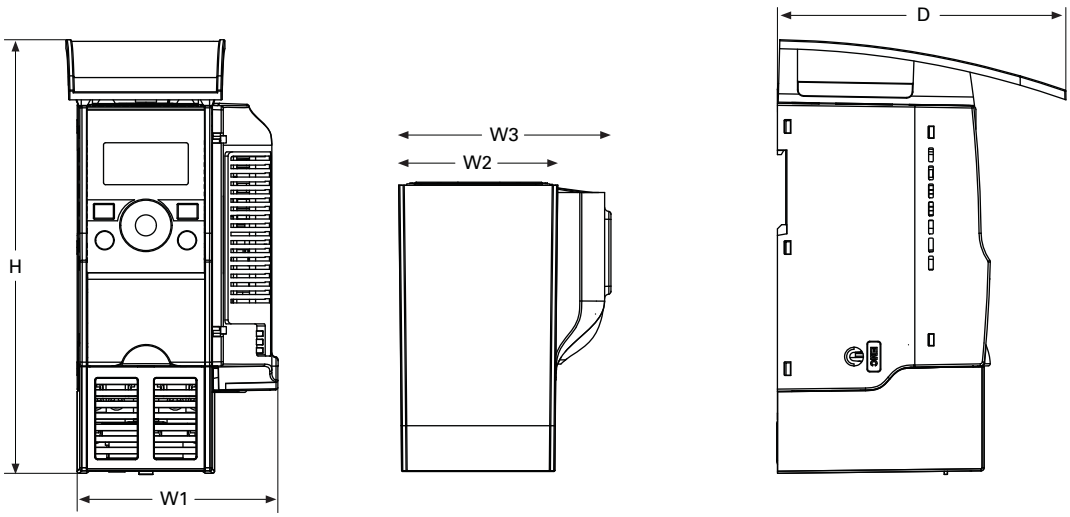

Frame Type	H	W1	W2	W3	D
FS1	8.14 (206.7)	3.77 (95.7)	2.99 (75.9)	3.98 (101.2)	5.41 (137.5)
FS2	9.90 (251.5)	4.72 (120.0)	3.97 (100.8)	4.94 (125.5)	5.68 (144.2)
FS3	12.26 (311.5)	5.12 (130.1)	4.36 (110.8)	5.33 (135.3)	6.32 (160.5)

SVX9000 Drives

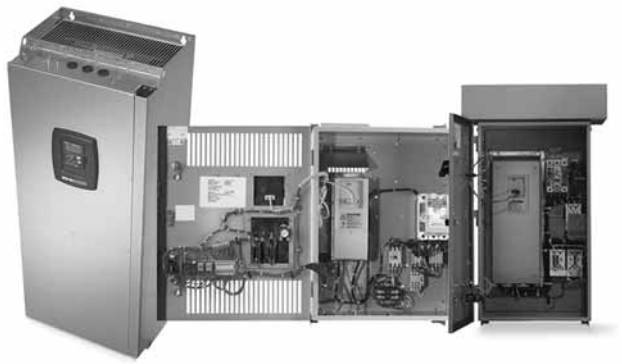

Contents

Description	*Page*
SVX9000 Drives	
SVX9000 Open Drives	**V6-T2-17**
SVX9000 Enclosed Drives	**V6-T2-52**
SVX9000 VFD Pump Panels	**V6-T2-78**

Product Overview

With the SVX9000 Series Sensorless Vector Control, Eaton's expanded Eaton drive offering now covers a complete line of PWM adjustable frequency (speed) drives in ratings from:

- 208V—3/4 to 100 hp I_H; 1 to 100 hp I_L
- 230V—3/4 to 100 hp I_H; 1 to 125 hp I_L
- 480V—1 to 1900 hp I_H; 1-1/2 to 2200 hp I_L
- 575V—2 to 2000 hp I_H; 3 to 2300 hp I_L

The Eaton family of drives includes HVX9000, H-Max, M-Max, SVX9000, SLX9000 and SPX9000. 9000X Series drive ratings are rated for either high overload (I_H) or low overload (I_L). I_L indicates 110% overload capacity for 1 minute out of 10 minutes. I_H indicates 150% overload capacity for 1 minute out of 10 minutes.

A full range of enclosure types and options are available to meet a wide array of applications—from simple variable torque to more complex industrial applications such as conveyors, mixers and machine controls.

Application Description

Application Engineering

Proper selection and application of all drive system components is essential to assure that an adjustable frequency drive system will safely and reliably provide the performance required for any given application. The party responsible for the overall design and operation of the facility must make sure that qualified personnel are employed to select all components of the drive system, including appropriate safety devices. Eaton's AF Drives Application Engineering Department is prepared to provide assistance to answer any questions about the technical capabilities of Eaton drives.

Motor Selection

The basic requirement of motor selection is to match the torque vs. speed capability of the motor to the torque vs. speed requirement of the driven load.

Motor Torque vs. Speed Capability

As the speed of a motor is reduced below its 60 Hz base speed, motor cooling becomes less effective because of the reduced speed of the self-cooling fan. This limitation determines the maximum torque for continuous operation at any operating speed. The maximum intermittent operating torque is determined by the motor's torque vs. current characteristics and the output current capability of the adjustable frequency controller.

Multiple Motor Operation

A number of motors can be connected in parallel to a single controller. Since the frequency of the power supplied by the controller is the same for each motor, the motors will always operate at the same speed. Application Engineering assistance must be requested for all multiple motor applications to assure compliance with all controller design limitations.

Special Types of Motors

Standard NEMA Designs A and B three-phase motors are the only motors recommended for use in the majority of applications, but other types of motors are occasionally used. If the existing motor used in the application or the motor proposed for use with the drive system is a type other than NEMA Design A or B, Application Engineering assistance must be requested to make certain that the drive is properly applied.

Product Selection Guide

Controller Selection

The basic requirement of controller selection is to match the output current, voltage and frequency capabilities of the controller with the requirements of the connected motor.

Output Current

The controller must be selected and applied such that the average operating motor current and horsepower do not exceed the continuous current and horsepower ratings of the controller. The intermittent operating current must not exceed the intermittent current rating of the controller.

Motor Protection

Eaton adjustable frequency drives include electronic motor overload protection circuits that are designed to meet the requirements of NEC article 430-2 provided that only one motor is connected to the output of the controller.

Output Voltage and Frequency

When they are shipped, AF controllers are adjusted to provide a maximum output voltage and frequency equivalent to the input line voltage and frequency. The controllers can be adjusted to operate above line frequency, but a hazard of personal injury or equipment damage may exist when the motor is operated above base speed. Before adjusting the drive to operate above line frequency, make sure that the motor and the driven machinery can safely be operated at the resulting speed.

Features

Controller Features

Operator Control and Interface Requirements

Since there are many possible configurations and many ways of achieving a specific end result, it pays to consider the operator control and interface requirements carefully. A simplified and more economical drive package can often be achieved by selecting from standard product offerings rather than specifying a custom designed configuration.

Installation Compatibility

The successful application of an AC drive requires the assurance that the drive will be compatible with the environment in which it will be installed. In planning the installation, be sure to carefully consider the heat produced by the drive, the altitude and temperature limits and the need for clean cooling air. Other important considerations include acoustical noise, vibration, electromagnetic compatibility, power quality, controller input harmonic current and power distribution equipment requirements.

Auxiliary Equipment and Accessories

Adjustable drives are generally designed to have a motor directly connected to the controller output terminals with no other equipment connected in series or parallel. Motor starters, disconnect switches, surge absorbers, DV/DT suppression circuits, output chokes, output transformers and any other equipment under consideration for installation on the output of the controller should not be installed without first requesting Application Engineering assistance. Power factor correction capacitors must never, under any circumstances, be connected at the output of the controller. They would serve no useful purpose, and they may damage the controller.

Enclosure Definitions

- **NEMA Type 1/IP21**—Enclosures are intended for indoor use primarily to provide a degree of protection against contact with enclosed equipment and provide a degree of protection against a limited amount of falling dirt in locations where unusual service conditions do not exist. Top or side openings in the NEMA Type 1/IP21 enclosure allow for the free exchange of inside and outside air while meeting the UL rod entry and rust resistance design tests.
- **NEMA Type 12/IP54**—Enclosures are intended for indoor use primarily to provide a degree of protection against circulating dust, falling dirt and dripping noncorrosive liquids. To meet UL drip, dust and rust resistance tests, NEMA Type 12/IP54 enclosures have no openings to allow for the exchange of inside and outside air.
- **Chassis IP00**—Similar to Protected Chassis IP20 except power terminals are protected by plastic shielding only. Primarily intended to be mounted inside a surrounding protective enclosure.
- **NEMA Type 3R**—Similar in design to NEMA Type 12/IP54 except with more stringent design and test requirements.

Motor Protection

DV/DT and Peak Motor Voltage Solutions

Today's AFD products offer significantly improved performance, but at the potential cost of motor insulation stress. The fast switching time of the IGBT devices used in newer AFDs can cause a transmission line effect in the output power leads to the motor, leading to possibly damaging voltage levels. To meet this need, NEMA has introduced a motor in MG1, Part 31, which provides an insulation system designed to maintain normal motor life in AFD applications. For existing motors, a motor protection scheme is required for longer cable runs. Eaton offers three standard solutions for existing systems.

- **MotoRx** This solution provides an energy recovery system which clamps the peak motor voltage to a safe level for standard motors. This option is used when the distance between a single motor and the drive is 600 ft or less.
- **Output Line Reactor** This option provides an output line reactor, reducing the DV/DT of the AFD output voltage and lessening the transmission line effect, to lower the peak voltage at the motor terminals.

Product Availability Codes

The product availability codes indicate the type of facility (warehouse, Mod Center or factory) that the product will ship from and, if it is not in stock, the number of working days needed to assemble the product from receipt of the order to shipment from the designated facility. Please note that this lead-time does not include any in-transit time from our facility to your facility.

Product Availability Codes

Code	Description
W	Warehouse stocked item. Shipped on customer request date. If item is backordered, please check Vista/VISTALINE or contact your Customer Support Center for product availability.
F1	Factory assemble-to-order. Shipped from factory within 1 working day after receipt of order on Vista.
FA	Factory assemble-to-order. Shipped from factory within 2–3 working days after receipt of order on Vista.
FB	Factory assemble-to-order. Shipped from factory within 4–10 working days after receipt of order on Vista.
FC	Factory assemble-to-order. Shipped from factory within 11–15 working days after receipt of order on Vista.
FD	Factory assemble-to-order. Shipped from factory within 16–20 working days after receipt of order on Vista.
FP	Factory assemble-to-order. Shipped from factory on negotiated promise date.
MA	Mod Center assemble-to-order. Shipped from Mod Center within 1–3 working days after receipt of order on Vista.
MB	Mod Center assemble-to-order. Shipped from Mod Center within 4–10 working days after receipt of order on Vista.
MP	Mod Center assemble-to-order. Shipped from Mod Center on negotiated promise date.

Product availability codes contained herein for a given product may be quantity sensitive and are subject to change without notice. For the most current information, refer to the Product Identification Inquiry (PIN) screen on Vista.

SVX9000 Open Drives

Contents

Description	*Page*
SVX9000 Open Drives	
Standards and Certifications	**V6-T2-18**
Catalog Number Selection	**V6-T2-18**
Product Selection	**V6-T2-19**
Accessories	**V6-T2-23**
Options	**V6-T2-24**
Replacement Parts	**V6-T2-27**
Technical Data and Specifications	**V6-T2-34**
Dimensions	**V6-T2-35**
SVX9000 Enclosed Drives	**V6-T2-52**
SVX9000 VFD Pump Panels	**V6-T2-78**

SVX9000 Open Drives

Product Description

SVX9000 Series Adjustable Frequency Drives from Eaton's electrical sector are the next generation of drives specifically engineered for today's commercial and industrial applications. The power unit makes use of the most sophisticated semiconductor technology and a highly modular construction that can be flexibly adapted to the customer's needs.

The input and output configuration (I/O) is designed with modularity in mind. The I/O is compromised of option cards, each with its own input and output configuration. The control module is designed to accept a total of five of these cards. The cards contain not only normal analog and digital inputs but also fieldbus cards.

These drives continue the tradition of robust performance, and raise the bar on features and functionality, ensuring the best solution at the right price.

Features

- Robust design—proven 500,000 hours MTBF
- Integrated 3% line reactors standard on drives from FR4 through FR9
- EMI/RFI Filters H standard up to 200 hp I_H 480V, 100 hp I_H 230V
- Simplified operating menu allows for typical programming changes, while programming mode provides control of everything
- Quick Start Wizard built into the programming of the drive ensures a smooth start-up
- Keypad can display up to three monitored parameters simultaneously
- LOCAL/REMOTE operation from keypad
- Copy/paste function allows transfer of parameter settings from one drive to the next
- Standard NEMA Type 12/ IP54 keypad on all drives
- The SVX can be flexibly adapted to a variety of needs using our pre-installed "Seven in One" precision application programs consisting of:
  - Basic
  - Standard
  - Local/remote
  - Multi step speed control
  - PID control
  - Multi-purpose control
  - Pump and fan control with auto change
- Additional I/O and communication cards provide plug and play functionality
- I/O connections with simple quick connection terminals
- Hand-held auxiliary 24V power supply allows programming/monitoring of control module without applying full power to the drive
- Control logic can be powered from an external auxiliary control panel, internal drive functions and fieldbus if necessary
- Brake chopper standard from: 1–30 hp/380–500V 3/4–15 hp/208–230V
- NEMA Type 1/IP21 and NEMA Type 12/IP54 enclosures available, Frame Sizes FR4–FR9
- Open chassis FR10 and greater
- Standard option board configuration includes an A9 I/O board and an A2 relay output board installed in slots A and B

Standards and Certifications

Product
- IEC 61800-2

EMC (At Default Settings)
- Immunity: Fulfills all EMC immunity requirements; Emissions: EN 61800-3, LEVEL H

Safety
- UL 508C

Catalog Number Selection

SVX9000 Adjustable Frequency Drives

SVX 010 A 1 – 4 A 1 B 1 _ _ _ _ _ _

Product Family
SVX = Open drives
SVX = Open drives FR10 and greater

Horsepower Rating

F07 = 3/4 hp	**800** = 800 hp
F15 = 1-1/2 hp	**900** = 900 hp
007 = 7-1/2 hp	**H10** = 1000 hp
010 = 10 hp	**H12** = 1200 hp
050 = 50 hp	**H13** = 1350 hp
125 = 125 hp	**H15** = 1500 hp
350 = 350 hp	**H16** = 1600 hp
700 = 700 hp	**H20** = 2000 hp

AFD Software Series
A = Standard software

Enclosure ③
0 = Chassis
1 = NEMA Type 1/IP21
2 = NEMA Type 12/IP54

Voltage Rating
2 = 230 (208–240) V
4 = 480 (380–500) V
5 = 575 (525–690) V

Keypad
A = Alphanumeric

Input Options ①
1 = Three-phase, EMC H
2 = Three-phase, EMC N
4 = Three-phase, EMC L

Brake Chopper Options ②
N = No brake chopper circuit
B = Internal brake chopper circuit

Board Modifications
1 = Standard boards
2 = Conformal (varnished) coating ④

Options
Options appear in alphabetical order.

Extended I/O Card Options
B1 = 6 DI, 1 ext +24 Vdc/EXT +24 Vdc
B2 = 1 RO (NC-NO), 1 RO (NO), 1 therm
B4 = 1 AI (mA isolated), 2 AO (mA isolated), 1 ext +24 Vdc/EXT + 24 Vdc
B5 = 3 RO (NO)
B8 = 1 ext +24 Vdc/EXT +24 Vdc, 3 Pt100
B9 = 1 RO (NO), 5 DI 42–240 Vac input

Communication Cards
CA = Johnson Controls N2
CI = Modbus TCP
CJ = BACnet
CK = Ethernet IP
C2 = Modbus
C3 = Profibus DP
C4 = LonWorks
C5 = Profibus DP (D9 connector)
C6 = CanOpen (slave)
C7 = DeviceNet
C8 = Modbus (D9 Type connector)
D3 = RS-232 with D9 connection

Power Module

FR10 – 000 – 4 – A N S

Frame Code

Horsepower
Example: **150** = 150 hp
(See chart above)

Voltage
4 = 380–500V
5 = 525–690V

Cooling Type
A = Air

Brake Option
N = No brake chopper
B = Brake chopper

Varnishing
S = Standard **V** = Varnished

Notes

① All 230V drives and 480V drives up to 200 hp (IH) are only available with input option **1** (EMC Level H). 480V drives 250 hp (IH) or larger are available with input option **2** (EMC Level N). 480V drives are available with input option **4** (EMC Level L). 575V drives 200 hp (IH) or larger are only available with input option **2**. 575V drives up to 150 hp (IH) are only available with input option **4** (EMC Level L).

② 480V drives up to 30 hp (IH) are only available with brake chopper option **B**. 480V drives 40 hp (IH) or larger come standard with brake chopper option **N**. 230V drives up to 15 hp (IH) are only available with brake chopper option **B**. 230V drives 20 hp or larger come standard with brake chopper option **N**. All 575V drives come standard without brake chopper option (N). **N** = **No** brake chopper.

③ 480V drives 250 hp (I_H) and larger are available with enclosure style **0** (chassis); 690V drives 200 hp (I_H) and larger are available with enclosure style **0** (chassis).

④ Factory promise delivery. Consult sales office for availability.

Product Selection

230V SVX9000 Drives

SVX9000 Open Drives

208–240V, NEMA Type 1/IP21 Drives

Frame Size	Delivery Code	hp (I_H)	Current (I_H)	hp (I_L)	Current (I_L)	Catalog Number
FR4	W	3/4	3.7	1	4.8	**SVXF07A1-2A1B1**
		1	4.8	1-1/2	6.6	**SVX001A1-2A1B1**
		1-1/2	6.6	2	7.8	**SVXF15A1-2A1B1**
		2	7.8	3	11	**SVX002A1-2A1B1**
		3	11	—	12.5	**SVX003A1-2A1B1**
FR5	W	—	12.5	5	17.5	**SVX004A1-2A1B1**
		5	17.5	7-1/2	25	**SVX005A1-2A1B1**
		7-1/2	25	10	31	**SVX007A1-2A1B1**
FR6	W	10	31	15	48	**SVX010A1-2A1B1**
		15	48	20	61	**SVX015A1-2A1B1**
FR7	W	20	61	25	75	**SVX020A1-2A1N1**
		25	75	30	88	**SVX025A1-2A1N1**
		30	88	40	114	**SVX030A1-2A1N1**
FR8	W	40	114	50	140	**SVX040A1-2A1N1**
		50	140	60	170	**SVX050A1-2A1N1**
		60	170	75	205	**SVX060A1-2A1N1**
FR9	W	75	205	100	261	**SVX075A1-2A1N1**
		100	261	125	300	**SVX100A1-2A1N1**

208–240V, NEMA Type 12/IP54 Drives

Frame Size	Delivery Code	hp (I_H)	Current (I_H)	hp (I_L)	Current (I_L)	Catalog Number
FR4	F1	3/4	3.7	1	4.8	**SVXF07A2-2A1B1**
		1	4.8	1-1/2	6.6	**SVX001A2-2A1B1**
		1-1/2	6.6	2	7.8	**SVXF15A2-2A1B1**
		2	7.8	3	11	**SVX002A2-2A1B1**
		3	11	—	12.5	**SVX003A2-2A1B1**
FR5	F1	—	12.5	5	17.5	**SVX004A2-2A1B1**
		5	17.5	7-1/2	25	**SVX005A2-2A1B1**
		7-1/2	25	10	31	**SVX007A2-2A1B1**
FR6	F1	10	31	15	48	**SVX010A2-2A1B1**
		15	48	20	61	**SVX015A2-2A1B1**
FR7	W	20	61	25	75	**SVX020A2-2A1N1**
		25	75	30	88	**SVX025A2-2A1N1**
		30	88	40	114	**SVX030A2-2A1N1**
FR8	FP	40	114	50	140	**SVX040A2-2A1N1**
		50	140	60	170	**SVX050A2-2A1N1**
		60	170	75	205	**SVX060A2-2A1N1**
FR9	FP	75	205	100	261	**SVX075A2-2A1N1**
		100	261	125	300	**SVX100A2-2A1N1**

480V SVX9000 Drives

SVX9000 Open Drives

380–500V, NEMA Type 1/IP21 Drives

Frame Size	Delivery Code	hp (I_H)	Current (I_H)	hp (I_L)	Current (I_L)	Catalog Number
FR4	W	1	2.2	1-1/2	3.3	**SVX001A1-4A1B1**
		1-1/2	3.3	2	4.3	**SVXF15A1-4A1B1**
		2	4.3	3	5.6	**SVX002A1-4A1B1**
		3	5.6	5	7.6	**SVX003A1-4A1B1**
		5	7.6	—	9	**SVX005A1-4A1B1**
		—	9	7-1/2	12	**SVX006A1-4A1B1**
FR5	W	7-1/2	12	10	16	**SVX007A1-4A1B1**
		10	16	15	23	**SVX010A1-4A1B1**
		15	23	20	31	**SVX015A1-4A1B1**
FR6	W	20	31	25	38	**SVX020A1-4A1B1**
		25	38	30	46	**SVX025A1-4A1B1**
		30	46	40	61	**SVX030A1-4A1B1**
FR7	W	40	61	50	72	**SVX040A1-4A1N1**
		50	72	60	87	**SVX050A1-4A1N1**
		60	87	75	105	**SVX060A1-4A1N1**
FR8	W	75	105	100	140	**SVX075A1-4A1N1**
		100	140	125	170	**SVX100A1-4A1N1**
		125	170	150	205	**SVX125A1-4A1N1**
FR9	W	150	205	200	261	**SVX150A1-4A1N1**
		200	245	250	300	**SVX200A1-4A1N1**

380–500V, NEMA Type 12/IP54 Drives

Frame Size	Delivery Code	hp (I_H)	Current (I_H)	hp (I_L)	Current (I_L)	Catalog Number
FR4	F1	1	2.2	1-1/2	3.3	**SVX001A2-4A1B1**
		1-1/2	3.3	2	4.3	**SVXF15A2-4A1B1**
		2	4.3	3	5.6	**SVX002A2-4A1B1**
		3	5.6	5	7.6	**SVX003A2-4A1B1**
		5	7.6	—	9	**SVX005A2-4A1B1**
		—	9	7-1/2	12	**SVX006A2-4A1B1**
FR5	F1	7-1/2	12	10	16	**SVX007A2-4A1B1**
		10	16	15	23	**SVX010A2-4A1B1**
		15	23	20	31	**SVX015A2-4A1B1**
FR6	F1	20	31	25	38	**SVX020A2-4A1B1**
		25	38	30	46	**SVX025A2-4A1B1**
		30	46	40	61	**SVX030A2-4A1B1**
FR7	W	40	61	50	72	**SVX040A2-4A1N1**
		50	72	60	87	**SVX050A2-4A1N1**
		60	87	75	105	**SVX060A2-4A1N1**
FR8	W	75	105	100	140	**SVX075A2-4A1N1**
		100	140	125	170	**SVX100A2-4A1N1**
		125	170	150	205	**SVX125A2-4A1N1**
FR9	W	150	205	200	261	**SVX150A2-4A1N1**
		200	245	250	300	**SVX200A2-4A1N1**

SVX9000 Open Drives

380–500V, Open Chassis Drives

Frame Size	Delivery Code	hp (I_H)	Current (I_H)	hp (I_L)	Current (I_L)	Catalog Number
FR10 ①	W	250	330	300	385	**SPX250A0-4A2N1**
		300	385	350	460	**SPX300A0-4A2N1**
		350	460	400	520	**SPX350A0-4A2N1**
FR11	W	400	520	500	590	**SPX400A0-4A2N1**
		500	590	—	650	**SPX500A0-4A2N1**
		—	650	600	730	**SPX550A0-4A2N1**
FR12	FP	600	730	—	820	**SPX600A0-4A2N1**
	W	—	820	700	920	**SPX650A0-4A2N1**
	FP	700	920	800	1030	**SPX700A0-4A2N1**
FR13	FP	800	1030	900	1150	**SPX800A0-4A2N1**
		900	1150	1000	1300	**SPX900A0-4A2N1**
		1000	1300	1200	1450	**SPXH10A0-4A2N1**
FR14	FP	1200	1600	1500	1770	**SPXH12A0-4A2N1**
		1600	1940	1800	2150	**SPXH16A0-4A2N1**
		1900	2300	2200	2700	**SPXH19A0-4A2N1**

575V SVX9000 Drives

525–690V, NEMA Type 1/IP21 Drives

Frame Size	Delivery Code	hp (I_H)	Current (I_H)	hp (I_L)	Current (I_L)	Catalog Number
FR6	W	2	3.3	3	4.5	**SVX002A1-5A4N1**
		3	4.5	—	5.5	**SVX003A1-5A4N1**
		—	5.5	5	7.5	**SVX004A1-5A4N1**
		5	7.5	7-1/2	10	**SVX005A1-5A4N1**
		7-1/2	10	10	13.5	**SVX007A1-5A4N1**
		10	13.5	15	18	**SVX010A1-5A4N1**
		15	18	20	22	**SVX015A1-5A4N1**
		20	22	25	27	**SVX020A1-5A4N1**
		25	27	30	34	**SVX025A1-5A4N1**
FR7	W	30	34	40	41	**SVX030A1-5A4N1**
		40	41	50	52	**SVX040A1-5A4N1**
FR8	W	50	52	60	62	**SVX050A1-5A4N1**
		60	62	75	80	**SVX060A1-5A4N1**
		75	80	100	100	**SVX075A1-5A4N1**
FR9	W	100	100	125	125	**SVX100A1-5A4N1**
		125	125	150	144	**SVX125A1-5A4N1**
		150	144	—	170	**SVX150A1-5A4N1**
		—	170	200	208	**SVX175A1-5A4N1**

Note

① FR10–FR14 includes 3% line reactor, but it is not integral to chassis.

SVX9000 Open Drives

525–690V, NEMA Type 12/IP54 Drives

Frame Size	Delivery Code	hp (I_H)	Current (I_H)	hp (I_L)	Current (I_L)	Catalog Number
FR6	F1	2	3.3	3	4.5	**SVX002A2-5A4N1**
		3	4.5	—	5.5	**SVX003A2-5A4N1**
		—	5.5	5	7.5	**SVX004A2-5A4N1**
		5	7.5	7-1/2	10	**SVX005A2-5A4N1**
		7-1/2	10	10	13.5	**SVX007A2-5A4N1**
		10	13.5	15	18	**SVX010A2-5A4N1**
		15	18	20	22	**SVX015A2-5A4N1**
		20	22	25	27	**SVX020A2-5A4N1**
		25	27	30	34	**SVX025A2-5A4N1**
FR7	FP	30	34	40	41	**SVX030A2-5A4N1**
		40	41	50	52	**SVX040A2-5A4N1**
FR8	FP	50	52	60	62	**SVX050A2-5A4N1**
		60	62	75	80	**SVX060A2-5A4N1**
		75	80	100	100	**SVX075A2-5A4N1**
FR9	FP	100	100	125	125	**SVX100A2-5A4N1**
		125	125	150	144	**SVX125A2-5A4N1**
		150	144	—	170	**SVX150A2-5A4N1**
		—	170	200	208	**SVX175A2-5A4N1**

525–690V, Open Chassis Drives

Frame Size	Delivery Code	hp (I_H)	Current (I_H)	hp (I_L)	Current (I_L)	Catalog Number
FR10	FP	200	208	250	261	**SPX200A0-5A2N1**
		250	261	300	325	**SPX250A0-5A2N1**
		300	325	400	385	**SPX300A0-5A2N1**
FR11	FP	400	385	450	460	**SPX400A0-5A2N1**
		450	460	500	502	**SPX450A0-5A2N1**
		500	502	—	590	**SPX500A0-5A2N1**
FR12	FP	—	590	600	650	**SPX550A0-5A2N1**
		600	650	700	750	**SPX600A0-5A2N1**
		700	750	800	820	**SPX700A0-5A2N1**
FR13	FP	800	820	900	920	**SPX800A0-5A2N1**
		900	920	1000	1030	**SPX900A0-5A2N1**
		1000	1030	1250	1180	**SPXH10A0-5A2N1**
FR14	FP	1350	1300	1500	1500	**SPXH13A0-5A2N1**
		1500	1500	2000	1900	**SPXH15A0-5A2N1**
		2000	1900	2300	2250	**SPXH20A0-5A2N1**

Accessories

Demo Drive and Power Supply

Demo Drive and Power Supply

Description	Catalog Number
9000X demo drive	**9000XDEMO**
Hand-held 24V auxiliary power supply—Used to supply power to the control module in order to perform keypad programming before the drive is connected to line voltage	**9000XAUX24V**

NEMA Type 12/IP54 Conversion Kit

The NEMA Type 12/IP54 kit option is used to convert a NEMA Type 1/IP21 to a NEMA Type 12/IP54 drive. The NEMA Type 12/IP54 kit consists of a metal drive shroud, fan kit for some frames, adaptor plate and plugs.

NEMA Type 12/IP54 Conversion Kit

Frame Size	Delivery Code	Approximate Dimensions in Inches (mm) Length	Width	Height	Approximate Weight Lb (kg)	Catalog Number
FR4	W	13 (330)	7 (178)	4 (102)	4 (1.8)	**OPTN12FR4**
FR5		16 (406)	8 (203)	7 (178)	5 (2.3)	**OPTN12FR5**
FR6		21 (533)	10 (254)	5 (127)	7 (3.2)	**OPTN12FR6**

Flange Kits

Flange Kit NEMA Type 12/IP54

The flange kit is utilized when the power section is mounted through the back panel of an enclosure. Includes flange mount brackets and NEMA Type 12/IP54 fan components. Metal shroud not included.

Flange kits for NEMA Type 12/IP54 enclosure drive rating are determined by rating of drive.

Flange Kit NEMA Type 12/IP54— Frames 4, 5 and 6 ①

Frame Size	Delivery Code	Catalog Number
FR4	W	**OPTTHRFR4**
FR5		**OPTTHRFR5**
FR6		**OPTTHRFR6**

Flange Kit NEMA Type 12/IP54—Frames 4–9 ①

Frame Size	Delivery Code	Catalog Number
FR4	FP	**OPTTHR4**
FR5		**OPTTHR5**
FR6		**OPTTHR6**
FR7		**OPTTHR7**
FR8		**OPTTHR8**
FR9		**OPTTHR9**

Flange Kit NEMA Type 1/IP21

Flange kits for NEMA Type 1/IP21 enclosure drive rating are determined by rating of drive.

Flange Kit NEMA Type 1/IP21—Frames 4–9 ①

Frame Size	Delivery Code	Catalog Number
FR4	FP	**OPTTHR4**
FR5		**OPTTHR5**
FR6		**OPTTHR6**
FR7		**OPTTHR7**
FR8		**OPTTHR8**
FR9		**OPTTHR9**

Note

① For installation of an SVX9000 NEMA Type 1/IP21 drive into a NEMA Type 12/IP54 oversized enclosure.

Options

9000X Series Option Board Kits

The 9000X Series drives can accommodate a wide selection of expander and adapter option boards to customize the drive for your application needs. The drive's control unit is designed to accept a total of five option boards.

The 9000X Series factory installed standard board configuration includes an A9 I/O board and an A2 relay output board, which are installed in slots A and B.

Option Boards

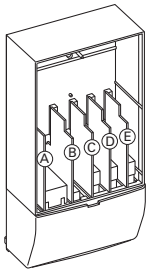

Option Board Kits

Option Kit Description ①	Allowed Slot Locations ②	Field Installed Catalog Number	Factory Installed Option Designator	SVX Ready Programs Basic	Local/ Remote	Standard	MSS	PID	Multi-P.	PFC
Standard I/O Cards										
2 RO (NC-NO)	B	**OPTA2**	—	■	■	■	■	■	■	■
6 DI, 1 DO, 2 AI, 1AO, 1 +10 Vdc ref, 2 ext +24 Vdc/EXT +24 Vdc	A	**OPTA9**	—	■	■	■	■	■	■	■
Extended I/O Cards										
2 RO, therm—SPX only	B	**OPTA3**	**A3**	—	■	■	■	■	■	■
Encoder low volt +5V/15V/24V—SPX only	C	**OPTA4**	**A4**	—	■	■	■	■	■	■
Encoder high volt +15V/24V—SPX only	C	**OPTA5**	**A5**	—	■	■	■	■	■	■
Double encoder—SPX only	C	**OPTA7**	**A7**	■	■	■	■	■	■	■
6 DI, 1 DO, 2 AI, 1 AO—SPX only	A	**OPTA8**	**A8**	—	■	■	■	■	■	■
3 DI (encoder 10–24V), out +15V/+24V, 2 DO (pulse+direction)—SPX only	C	**OPTAE**	**AE**	■	■	■	■	■	■	■
6 DI, 1 ext +24 Vdc/EXT +24 Vdc	B, C, **D**, E	**OPTB1**	**B1**	—	—	—	—	—	■	■
1 RO (NC-NO), 1 RO (NO), 1 therm	B, C, **D**, E	**OPTB2**	**B2**	—	—	—	—	—	■	■
1 AI (mA isolated), 2 AO (mA isolated), 1 ext +24 Vdc/EXT +24 Vdc	B, C, **D**, E	**OPTB4**	**B4**	■	■	■	■	■	■	■
3 RO (NO)	B, C, **D**, E	**OPTB5**	**B5**	—	—	—	—	—	■	■
1 ext +24 Vdc/EXT +24 Vdc, 3 Pt100	B, C, **D**, E	**OPTB8**	**B8**	—	—	—	—	—	—	—
1 RO (NO), 5 DI 42–240 Vac input	B, C, **D**, E	**OPTB9**	**B9**	—	—	—	—	—	■	■
Communication Cards										
Modbus ③	D, **E**	**OPTC2**	**C2**	■	■	■	■	■	■	■
Johnson Controls N2 ③	D, **E**	**OPTC2**	**CA**	—	—	—	—	—	—	—
Modbus TCP	D, **E**	**OPTCI**	**CI**	■	■	■	■	■	■	■
BACnet	D, **E**	**OPTCJ**	**CJ**	■	■	■	■	■	■	■
Ethernet IP	D, **E**	**OPTCK**	**CK**	■	■	■	■	■	■	■
Profibus DP	D, **E**	**OPTC3**	**C3**	■	■	■	■	■	■	■
LonWorks	D, **E**	**OPTC4**	**C4**	■	■	■	■	■	■	■
Profibus DP (D9 connector)	D, **E**	**OPTC5**	**C5**	■	■	■	■	■	■	■
CanOpen (slave) ④	D, **E**	**OPTC6**	**C6**	■	■	■	■	■	■	■
DeviceNet	D, **E**	**OPTC7**	**C7**	■	■	■	■	■	■	■
Modbus (D9 type connector)	D, **E**	**OPTC8**	**C8**	■	■	■	■	■	■	■
Adapter—SPX only	D, **E**	**OPTD1**	**D1**	■	■	■	■	■	■	■
Adapter—SPX only	D, **E**	**OPTD2**	**D2**	■	■	■	■	■	■	■
RS-232 with D9 connection	D, **E**	**OPTD3**	**D3**	■	■	■	■	■	■	■
Keypad										
9000X Series local/remote keypad (replacement keypad)	—	**KEYPAD-LOC/REM**	—	—	—	—	—	—	—	—
9000X Series remote mount keypad unit (keypad not included, includes 10 ft cable, keypad holder, mounting hardware)	—	**OPTRMT-KIT-9000X**	—	—	—	—	—	—	—	—
9000X Series RS-232 cable, 13 ft	—	**PP00104**	—	—	—	—	—	—	—	—

Notes

① AI = Analog Input; AO = Analog Output, DI = Digital Input, DO = Digital Output, RO = Relay Output

② Option card must be installed in one of the slots listed for that card. Slot indicated in bold is the preferred location.

③ OPTC2 is a multi-protocol option card.

④ SPX9000 drives only (FR10 and larger).

Modbus RTU Network Communications

The Modbus Network Card OPTC2 is used for connecting the 9000X Drive as a slave on a Modbus network. The interface is connected by a 9-pin DSUB connector (female) and the baud rate ranges from 300 to 19200 baud. Other communication parameters include an address range from 1 to 247; a parity of None, Odd or Even; and the stop bit is 1.

Profibus Network Communications

The Profibus Network Card OPTC3 is used for connecting the 9000X Drive as a slave on a Profibus-DP network. The interface is connected by a 9-pin DSUB connector (female). The baud rates range from 9.6K baud to 12M baud, and the addresses range from 1 to 127.

LonWorks Network Communications

The LonWorks Network Card OPTC4 is used for connecting the 9000X Drive on a LonWorks network. This interface uses Standard Network Variable Types (SNVT) as data types. The channel connection is achieved using a FTT-10A Free Topology transceiver via a single twisted transfer cable. The communication speed with LonWorks is 78 kBits/s.

CanOpen (Slave) Communications

The CanOpen (Slave) Network Card OPTC6 is used for connecting the 9000X Drive to a host system. According to ISO11898 standard cables to be chosen for CAN bus should have a nominal impedance of 120 ohms, and specific line delay of nominal 5 nS/m. 120 ohms line termination resistors required for installation.

DeviceNet Network Communications

The DeviceNet Network Card OPTC7 is used for connecting the 9000X Drive on a DeviceNet Network. It includes a 5.08 mm pluggable connector. Transfer method is via CAN using a two-wire twisted shielded cable with two-wire bus power cable and drain. The baud rates used for communication include 125K baud, 250K baud and 500K baud.

Johnson Controls Metasys N2 Network Communications

The OPTC2 fieldbus board provides communication between the 9000X Drive and a Johnson Controls Metasys™ N2 network. With this connection, the drive can be controlled, monitored and programmed from the Metasys system. The N2 fieldbus is available as a factory installed option and as a field installable kit.

Modbus/TCP Network Communications

The Modbus/TCP Network Card OPTCI is used for connecting the 9000X Drive to Ethernet networks utilizing Modbus protocol. It includes an RJ-45 pluggable connector. This interface provides a selection of standard and custom register values to communicate drive parameters. The board supports 10 Mbps and 100 Mbps communication speeds. The IP address of the board is configurable over Ethernet using a supplied software tool.

BACnet Network Communications

The BACnet Network Card OPTCJ is used for connecting the 9000X Drive to BACnet networks. It includes a 5.08 mm pluggable connector. Data transfer is Master-Slave/Token Passing (MS/TP) RS-485. This interface uses a collection of 30 Binary Value Objects (BVOs) and 35 Analog Value Objects (AVOs) to communicate drive parameters. The card supports 9.6, 19.2 and 38.4 Kbaud communication speeds and supports network addresses 1–127.

Ethernet/IP Network Communications

The Ethernet/IP Network Card OPTCK is used for connecting the 9000X Drive to Ethernet/Industrial Protocol networks. It includes an RJ-45 pluggable connector. The interface uses CIP objects to communicate drive parameters (CIP is "Common Industrial Protocol", the same protocol used by DeviceNet). The board supports 10 Mbps and 100 Mbps communication speeds. The IP address of the board is configurable by Static, BOOTP and DHCP methods.

Control Panel Options

Factory Options

Description	Factory Installed Option Code	Field Installed NEMA Type 1/IP21 Catalog Number
Local/Remote Keypad SVX9000 Control Panel—This option is standard on all drives and consists of an RS-232 connection, backlit alphanumeric LCD display with nine indicators for the RUN status and two indicators for the control source. The nine pushbuttons on the panel are used for panel programming and monitoring of all SVX9000 parameters. The panel is detachable and isolated from the input line potential. Include LOC/REM key to choose control location.	**A**	**KEYPAD-LOC/REM**
Keypad Remote Mounting Kit—This option is used to remote mount the SVX9000 keypad. The footprint is compatible to the SV9000 remote mount kit. Includes 10 ft cable, keypad holder and mounting hardware.	—	**OPTRMT-KIT-9000X**

Miscellaneous Options

Description	Catalog Number
9000XDrive—A PC-based tool for controlling and monitoring of the SVX9000. Features include: loading parameters that can be saved to a file or printed, setting references, starting and stopping the motor, monitoring signals in graphical or text form, and real-time display. To avoid damage to the drive or computer, SVDrivecable must be used.	**9000XDRIVE**
SVDrivecable—6 ft (1.8m) RS-232 cable (22 gauge) with a 7-pin connector on each end. Should be used in conjunction with the 9000XDrive option to avoid damage to the SVX9000 or computer. The same cable can be used for downloading specialized applications to the drive.	**SVDRIVECABLE**
External Dynamic Braking Resistors—Used with the dynamic braking chopper circuit to absorb motor regenerative energy for stopping the load and to dissipate the energy flowing back into the drive. Resistors are separated into standard duty and heavy-duty. Standard duty is defined as 20% duty or less with 100% braking torque, while heavy-duty is defined as 50% duty or less with 150% braking torque.	①

Open Drive Options

Brake Chopper Options

The brake chopper circuit option is used for applications that require dynamic braking. Dynamic braking resistors are not included with drive purchase. Consult the factory for dynamic braking resistors which are supplied separately. Resistors are not UL Listed.

For brake chopper circuit selection and adder—NEMA Type 1/IP21, NEMA Type 12/IP54, Chassis, consult the factory. Delivery code is FP.

Conformal (Varnished) Coating ②

Chassis Frame	Delivery Code
FR4	FP
FR5	FP
FR6	FP
FR7	FP
FR8	FP
FR9	FP
FR10	FP
FR11	FP
FR12	FP
FR13	FP
FR14	FP

Conformal Coated Board Kits ③

Field Installed Catalog Number	Factory Installed Option Designator
OPT_V ④	⑤

Notes

① Consult factory.
② See Product Selection on **Pages V6-T2-19** to **V6-T2-22**, 208–240V, 380–500V, 525–690V. Consult the factory for adder.
③ See option catalog numbers on **Page V6-T2-24**.
④ Replace "__" with the correct catalog number from **Page V6-T2-24**. Example: OPT**C2**V.
⑤ Construct catalog numbers for factory installed per Catalog Number Selection on **Page V6-T2-18**.

Replacement Parts

SVX9000 Drives Spare Units

208–690V, Frames 4–12

Description	Catalog Number
Control unit–Includes the control board, blue base housing, installed SVX9000 software program and blue flip cover. Does not include any OPT boards or keypad. See **Page V6-T2-24** for standard and option boards and keypad.	**CSBS0000000000**

SVX9000 Drives Replacement Parts

208–240V, Frames FR4–FR8

Frame	4					5			6		7			8			Delivery	
hp (I_H):	3/4	1	1-1/2	2	3	5 ①	5	7-1/2	10	15	20	25	30	40	50	60	Code	Catalog Number
Control Board																		
	1	1	1	1	1	1	1	1	1	1	1	1	1	1	1	1	W	**VB00252**
Power Boards																		
	1																FB	**VB00308-0004-2**
		1															FB	**VB00308-0007-2**
			1														FB	**VB00308-0008-2**
				1													FB	**VB00310-0011-2**
					1												FB	**VB00310-0012-2**
						1											FB	**VB00313-0017-2**
							1										FB	**VB00313-0025-2**
								1									FB	**VB00313-0031-2**
									1								FB	**VB00316-0048-2**
										1							FB	**VB00316-0061-2**
											1						FB	**VB00319-0075-2**
												1					FB	**VB00319-0088-2**
													1				FB	**VB00319-0114-2**
														1			FB	**VB00322-0140-2**
															1		FB	**VB00322-0170-2**
																1	FB	**VB00322-0205-2**
Electrolytic Capacitors																		
	2	2	2														W	**PP01000**
				2	2												W	**PP01001**
						2	2										W	**PP01002**
								2									W	**PP01003**
									2	2							W	**PP01004**
											2	2	2	4	4		W	**PP01005**
																4	W	**PP01099**
Cooling Fans																		
	1	1	1	1	1												W	**PP01060**
						1	1	1									W	**PP01061**
									1	1							W	**PP01062**
											1	1	1				W	**PP01063**
														1	1	1	FC	**PP01123** ②
	1	1	1	1	1												W	**PP01086**
						1	1	1	1	1							FC	**PP01088**
											1	1	1				W	**PP01049**
														1	2	2	FC	**CP01180**
														1	1	1	FC	**PP08037**

Notes

① I_L only; has no corresponding I_H rated hp rating.

② PP00061 capacitor not included in main fan; please order separately.

208–240V, Frames FR4–FR8, continued

Frame	4					5			6		7			8				
hp (I_H):	3/4	1	1-1/2	2	3	5 ①	5	7-1/2	10	15	20	25	30	40	50	60	Delivery Code	Catalog Number
IGBT Modules																		
	1	1															W	CP01304
			1														W	CP01305
				1	1	1											W	CP01306
							1										W	CP01307
								1									W	CP01308
									1								W	PP01022
										1							W	PP01023
											1						W	PP01024
												1					W	PP01025
													1				W	PP01029
														1			W	PP01026
															1	1	W	PP01027
Choppers/Rectifiers																		
									1								W	CP01367
										1							W	CP01368
Diode/Thyristor Modules																		
											3	3	3				W	PP01035
														3	3	3	W	CP01268
Rectifying Boards																		
											1	1	1				W	VB00242
														1	1	1	W	VB00227

380–500V, Frames FR4–FR9

Frame	4						5			6			7			8			9			
hp (I_H):	1	1-1/2	2	3	5	7-1/2 ①	7-1/2	10	15	20	25	30	40	50	60	75	100	125	150	200	Delivery Code	Catalog Number
Control Board																						
	1	1	1	1	1	1	1	1	1	1	1	1	1	1	1	1	1	1	1	1	W	VB00252
Power Boards																						
	1																				FB	VB00208-0003-5
		1																			FB	VB00208-0004-5
			1																		FB	VB00208-0005-5
				1																	FB	VB00208-0007-5
					1																FB	VB00208-0009-5
						1															FB	VB00210-0012-5
							1														FB	VB00213-0016-5
								1													FB	VB00213-0022-5
									1												FB	VB00213-0031-5
										1											FB	VB00216-0038-5
											1										FB	VB00216-0045-5
												1									FB	VB00216-0061-5
													1								FB	VB00219-0072-5
														1							FB	VB00219-0087-5
															1						FB	VB00219-0105-5
																1					FB	VB00236-0140-5
																	1				FB	VB00236-0168-5
																		1			FB	VB00236-0205-5

Note

① I_L only; has no corresponding I_H rated hp rating.

380–500V, Frames FR4–FR9, continued

Frame	4						5			6			7			8			9		Delivery	
hp (I_H):	1	1-1/2	2	3	5	7-1/2 ①	7-1/2	10	15	20	25	30	40	50	60	75	100	125	150	200	Code	Catalog Number
Electrolytic Capacitors																						
	2	2	2	2																	W	**PP01000**
					2	2															W	**PP01001**
							2	2													W	**PP01002**
									2												W	**PP01003**
										2	2	2									W	**PP01004**
													2	2	2	4	4	4	8	8	W	**PP01005**
Cooling Fans																						
	1	1	1	1	1	1															W	**PP01060**
							1	1	1												W	**PP01061**
										1	1	1									W	**PP01062**
													1	1	1						W	**PP01063**
																1	1	1			FC	**PP01123** ②
																			1	1	FC	**PP01080** ③
	1	1	1	1	1	1															W	**PP01086**
							1	1	1												FC	**PP01088**
										1	1	1	1	1	1						W	**PP01049**
																1	1	1			FC	**CP01180**
																			1 ④	2	W	**PP01068**
																			1	1	FC	**PP09051**
IGBT Modules																						
	1	1	1																		W	**CP01304**
				1	1																W	**CP01305**
						1	1														W	**CP01306**
								1													W	**CP01307**
									1												W	**CP01308**
										1											W	**PP01020**
											1										W	**PP01022**
												1									W	**PP01023**
													1								W	**PP01024**
														1							W	**PP01025**
															1						W	**PP01029**
																1					W	**PP01026**
																	1	1			W	**PP01027**
Chopper/Rectifiers																						
										1	1										W	**CP01367**
												1									W	**CP01368**
Diode/Thyristor Modules																						
													3	3	3						W	**PP01035**
																3	3	3			W	**CP01268**
																			3	3	W	**PP01037**

Notes

① I_L only; has no corresponding I_H rated hp rating.
② PP00061 capacitor not included in main fan; please order separately.
③ PP00011 capacitor not included in main fan; please order separately.
④ For FR9 NEMA Type 12/IP54 you need two PP01068 internal fans.

380–500V, Frames FR4–FR9, continued

Frame	4						5			6			7			8			9			
hp (I_H):	1	1-1/2	2	3	5	7-1/2 ①	7-1/2	10	15	20	25	30	40	50	60	75	100	125	150	200	Delivery Code	Catalog Number
Rectifying Boards																						
													1	1	1						W	**VB00242**
																1	1	1			W	**VB00227**
																			1	1	W	**VB00459**
Rectifying Module Sub-Assembly																						
																			1	1	W	**FR09810**
Power Module Sub-Assemblies																						
																			1		W	**FR09-150-4-ANS** ②
																				1	W	**FR09-200-4-ANS** ②

380–500V, Frames FR10–FR12

Frame	10			11			12				
hp (I_H):	250	300	350	400	500	550	600	650	700	Delivery Code	Catalog Number
Control Board											
1	1	1	1	1	1	1	1	1	W	**VB00561** ③
Shunt Boards											
6									FC	**VB00537**
	6								FC	**VB00497**
		6				12	12	12	FC	**VB00498**
			9						FC	**VB00538**
				9					FC	**VB00513**
					9				FC	**VB00514**
Driver Boards										
			3	3	3				FC	**VB00489**
1	1	1				2	2	2	FC	**VB00487**
Driver Adapter Board										
1	1	1				2	2	2	FC	**VB00330**
ASIC Board										
1	1	1	1	1	1	2	2	2	FC	**VB00451**
Feedback Interface Board										
						2	2	2	FC	**VB00448**
Star Coupler Board										
						1	1	1	FC	**VB00336**
Power Modules										
1	1	1	2	2	2	2	2	2	FC	**FR10820** ④
2	2	2							FC	**FR10828**
1									FC	**FR10-250-4-ANS** ②
	1								FC	**FR10-300-4-ANS** ②
		1				2	2	2	FC	**FR10-350-4-ANS** ②
			3						FC	**FR11–400-4-ANS** ②
				3					FC	**FR11-500-4-ANS** ②
					3				FC	**FR11-550-4-ANS** ②

Notes

① I_L only; has no corresponding I_H rated hp rating.
② See **Page V6-T2-18** for details.
③ SPX9000 drives only (FR10 and larger).
④ Rectifying board not included.

380–500V, Frames FR10–FR12, continued

Frame	10			11			12			Delivery	
hp (I_H):	250	300	350	400	500	550	600	650	700	Code	Catalog Number
Electrolytic Capacitors											
2	2	2	3	3	3	4	4	4	FC	**PP00060**
12	12	12	18	18	18	24	24	24	FC	**PP01005**
Fuses											
1	1	1	1	1	1	2	2	2	FC	**PP01094**
2	2	2	2	2	2	4	4	4	FC	**PP01095**
Cooling Fans and Isolation Transformers											
2	2	2	3	3	3	4	4	4	FC	**VB00299**
2	2	2	3	3	3	4	4	4	FC	**PP01080** ①
2	2	2				4	4	4	FC	**PP01068**
1	1	1	1	1	1	2	2	2	FC	**PP01096**
1	1	1				2	2	2	FC	**FR10844**
1	1	1	3	3	3	2	2	2	FC	**FR10845**
1	1	1				2	2	2	FC	**FR10846**
1	1	1	3	3	3	2	2	2	FC	**FR10847**
Rectifying Board											
1	1	1	2	2	2	2	2	2	FC	**VB00459**

525–690V, Frames FR6–FR9

Frame	6									7		8			9				Delivery	
hp (I_H):	2	3	5 ②	5	7-1/2	10	15	20	25	30	40	50	60	75	100	125	150	200 ②	Code	Catalog Number
Control Board																				
1	1	1	1	1	1	1	1	1	1	1					1	1	1	W	**VB00252**
Driver Boards																				
1																			FB	**VB00404-0004-6**
	1																		FB	**VB00404-0005-6**
		1																	FB	**VB00404-0007-6**
			1																FB	**VB00404-0010-6**
				1															FB	**VB00404-0013-6**
					1														FB	**VB00404-0018-6**
						1													FB	**VB00404-0022-6**
							1												FB	**VB00404-0027-6**
								1											FB	**VB00404-0034-6**
Power Boards																				
									1										FB	**VB00419-0041-6**
										1									FB	**VB00419-0052-6**
											1								FB	**VB00422-0062-6**
												1							FB	**VB00422-0080-6**
													1						FB	**VB00422-0100-6**
Power Modules																				
															1				FC	**FR09-100-5-ANS** ③
																1			FC	**FR09-125-5-ANS** ③
																	1		FC	**FR09-150-5-ANS** ③
																		1	FC	**FR09-175-5-ANS** ③

Notes

① PP00060 capacitor not included in main fan; please order separately.
② I_L only; has no corresponding I_H rated hp rating.
③ See **Page V6-T2-18** for details.

525–690V, Frames FR6–FR9, continued

Frame	6									7		8			9					
hp (I_H):	2	3	5 ①	5	7-1/2	10	15	20	25	30	40	50	60	75	100	125	150	200 ①	Delivery Code	Catalog Number
Electrolytic Capacitors																				
2	2	2	2	2	2	2	2	2											FC	**PP01093**
										2	2	4	4		8	8	8	8	FC	**PP01041**
														4					FC	**PP01040**
Fuses																				
												1	1	1	1	1	1	1	W	**PP01094**
												2	2	2	2	2	2	2	W	**PP01095**
Cooling Fans																				
1	1	1	1	1															W	**PP01061**
						1	1	1	1										W	**PP01062**
										1	1								W	**PP01063**
												1	1	1					FC	**PP01123**
1	1	1	1	1	1	1	1	1	1	1	1								W	**PP01049**
												1	1	1					FC	**CP01180**
															1	1	1	1 ②	W	**PP01068**
															1	1	1	1	FC	**PP01080**
Fan Power Supply																				
																1	1	1	FC	**VB00299**
IGBT Modules																				
3	3	3	3	3	3	3	3	3											FC	**PP01091**
										1	1								FC	**PP01089**
												1	1	1					FC	**PP01127**
IGBT/Diode (Brake)																				
1	1	1	1	1	1	1	1	1	1	1	2	2	2	2	2	2	2	FC	**PP01040**
Diode Module																				
1	1	1	1	1	1	1	1	1											FC	**PP01092**
Diode/Thyristor Modules																				
										3	3								FC	**PP01071**
															3	3	3	3	FC	**PP01072**
Rectifying Boards																				
										1	1								FC	**VB00442**
															1	1	1	1	FC	**VB00460**
Rectifying Module Sub-Assemblies																				
																1	1	1	W	**FR09810**
																1	1	1	FC	**FR09811**

Notes

① I_L only; has no corresponding I_H rated hp rating.

② For NEMA Type 12/IP54, two PP01068 internal fans are needed.

525–690V, Frames FR10–FR12

Frame	10			11			12			Delivery Code	Catalog Number
hp (I_H):	200	250	300	400	450	500	550	600	700		
Component Boards											
1	1	1	1	1	1	1	1	1	1	W	**VB00561** ①
1	1	1	1	1	1	2	2	2	FC	**VB00451**
6									FC	**VB00545**
	6								FC	**VB00510**
		6				12	12	12	FC	**VB00511**
1	1	1				2	2	2	FC	**VB00330**
1	1	1				2	2	2	FC	**VB00487**
			3	3	3				FC	**VB00489**
			9						FC	**VB00546**
				9					FC	**VB00547**
					9				FC	**VB00512**
						2	2	2	FC	**VB00448**
						1	1	1	FC	**VB00336**
Power Modules											
1	1	1	2	2	2	2	2	2	FC	**FR10821** ②
2	2	2							FC	**FR10829**
1									FC	**FR10-200-5-ANS** ③
	1								FC	**FR10-250-5-ANS** ③
		1				2	2	2	FC	**FR10-300-5-ANS** ③
			3						FC	**FR11–400-5-ANS** ③
				3					FC	**FR11-450-5-ANS** ③
					3				FC	**FR11-500-5-ANS** ③
Electrolytic Capacitors											
2	2	2	3	3	3	4	4	4	FC	**PP00060**
12	12	12	18	18	18	24	24	24	FC	**PP01099**
Fuses											
1	1	1	1	1	1	2	2	2	FC	**PP01094**
2	2	2	2	2	2	4	4	4	FC	**PP01095**
Cooling Fans and Isolation Transformers											
2	2	2	3	3	3	4	4	4	FC	**VB00299**
2	2	2	3	3	3	4	4	4	FC	**PP01080** ④
2	2	2				4	4	4	FC	**PP01068**
1	1	1	1	1	1	2	2	2	FC	**PP01096**
1	1	1				2	2	2	FC	**FR10844**
1	1	1	3	3	3	2	2	2	FC	**FR10845**
1	1	1				2	2	2	FC	**FR10846**
1	1	1	3	3	3	2	2	2	FC	**FR10847**
Fan Power Supply											
						1	1	1	FC	**VB00299**
Rectifying Boards											
1	1	1	2	2	2	2	2	2	FC	**VB00460**

Notes

① SPX9000 drives only (FR10 and larger).
② Rectifying board not included.
③ See **Page V6-T2-18** for details.
④ PP00060 capacitor not included in main fan; please order separately.

Technical Data and Specifications

SVX9000 Drives

Description	Specification
Input Ratings	
Input voltage (V_{in})	+10%/–15%
Input frequency (f_{in})	50/60 Hz (variation up to 45–66 Hz)
Connection to power	Once per minute or less (typical operation)
High withstand rating	100 kAIC
Output Ratings	
Output voltage	0 to V_{in}
Continuous output current	I_H rated 100% at 122°F (50°C), FR9 and below I_L rated 100% at 104°F (40°C), FR9 and below I_H/I_L 100% at 104°F (40°C), FR10 and above
Overload current (I_H/I_L)	150% I_H, 110% I_L for 1 min.
Output frequency	0 to 320 Hz
Frequency resolution	0.01 Hz
Initial output current (I_H)	250% for 2 seconds
Control Characteristics	
Control method	Frequency control (V/f) Open loop: Sensorless vector control Closed loop: SPX9000 drives only
Switching frequency Frame 4–6 Frame 7–12	Adjustable with parameter 2.6.9 1–16 kHz; default 10 kHz 1–10 kHz; default 3.6 kHz
Frequency reference	Analog input: Resolution 0.1% (10-bit), accuracy ±1% V/Hz Panel reference: Resolution 0.01 Hz
Field weakening point	30–320 Hz
Acceleration time	0–3000 sec.
Deceleration time	0–3000 sec.
Braking torque	DC brake: 30% x T_n (without brake option)
Ambient Conditions	
Ambient operating temperature	14°F (–10°C), no frost to 122°F (50°C) I_H (FR4–FR9) 14°F (–10°C), no frost to 104°F (40°C) I_H (FR10 and up) 14°F (–10°C), no frost to 104°F (40°C) I_L (all frames)
Storage temperature	–40° to 158°F (–40° to 70°C)
Relative humidity	0 to 95% RH, noncondensing, non-corrosive, no dripping water
Air quality	Chemical vapors: IEC 721-3-3, unit in operation, class 3C2; Mechanical particles: IEC 721-3-3, unit in operation, class 3S2
Altitude	100% load capacity (no derating) up to 3280 ft (1000m); 1% derating for each 328 ft (100m) above 3280 ft (1000m); max. 9842 ft (3000m)
Vibration	EN 50178, EN 60068-2-6; 5 to 50 Hz, displacement amplitude 1 mm (peak) at 3 to 15.8 Hz, max. acceleration amplitude 1G at 15.8 to 150 Hz
Shock	EN 50178, EN 60068-2-27 UPS Drop test (for applicable UPS weights) Storage and shipping: max. 15G, 11 ms (in package)
Enclosure class	NEMA 1/IP21 or NEMA 12/IP54, open chassis/IP20

Description	Specification
Control Connections	
Analog input voltage	0 to 10V, R = 200 kohms (–10 to 10V joystick control) resolution 0.1%; accuracy ±1%
Analog input current	0(4) to 20 mA; R_i—250 ohms differential
Digital inputs (6)	Positive or negative logic; 18 to 30 Vdc
Auxiliary voltage	+24V ±15%, max. 250 mA
Output reference voltage	+10V +3%, max. load 10 mA
Analog output	0(4) to 20 mA; R_L max. 500 ohms; resolution 10 bit; accuracy ±2%
Digital outputs	Open collector output, 50 mA/48V
Relay outputs	Two programmable Form C relay outputs switching capacity: 24 Vdc/8A, 250 Vac/8A, 125 Vdc/0.4A
Protections	
Overcurrent protection	Trip limit 4.0 x I_H instantaneously
Overvoltage protection	Yes
Undervoltage protection	Yes
Earth fault protection	In case of earth fault in motor or motor cable, only the frequency converter is protected
Input phase supervision	Trips if any of the input phases are missing
Motor phase supervision	Trips if any of the output phases are missing
Overtemperature protection	Yes
Motor overload protection	Yes
Motor stall protection	Yes
Motor underload protection	Yes
Short circuit protection	Yes (+24V and +10V reference voltages)

Standard I/O Specifications

Description	Specification
Six–digital input programmable	24V: "0" ≤10V, "1" ≥18V,R_i >5 kohms
Two–analog input configurable w/jumpers	Voltage: 0–±10V, R_i >200 kohms Current: 0 (4)–20 mA, R_i = 250 ohms
Two–digital output programmable	Form C relays 250 Vac 30 Vdc 2 amp resistive
One–analog output programmable configurable w/jumper	0–20 mA, R_L max. 500 ohms 10 bits ±2%
One digital output programmable	Open collector 48 Vdc 50 mA

Dimensions

Approximate Dimensions in Inches (mm)

9000X Open Drives

NEMA Type 1/IP21 and NEMA Type 12/IP54, FR4, FR5 and FR6

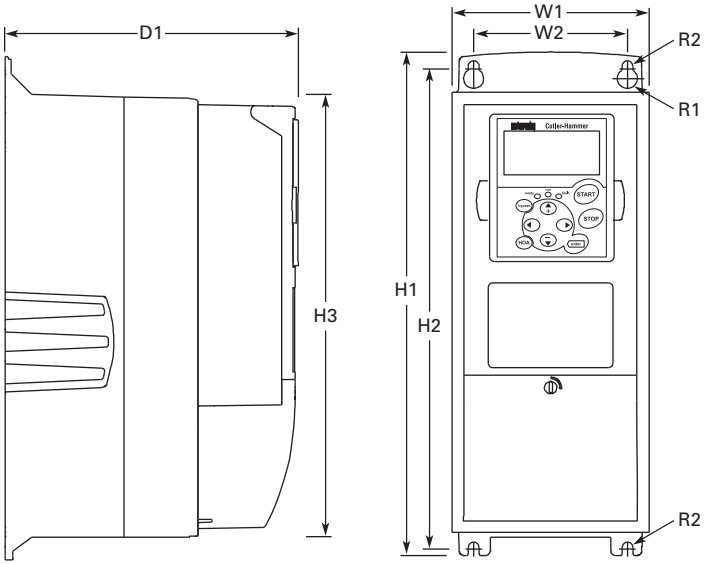

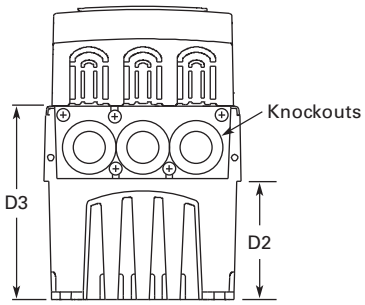

Voltage	hp (I_H)	H1	H2	H3	D1	D2	D3	W1	W2	R1 Dia.	R2 Dia.	Weight Lbs (kg)	Knockouts at Inches (mm) N1 (O.D.)
FR4													
230V	3/4–3	12.9 (327)	12.3 (313)	11.5 (292)	7.5 (190)	3.0 (77)	4.9 (126)	5.0 (128)	3.9 (100)	0.5 (13)	0.3 (7)	11.0 (5)	3 @ 1.1 (28)
480V	1–5												
FR5													
230V	5–7-1/2	16.5 (419)	16.0 (406)	15.3 (389)	8.4 (214)	3.9 (100)	5.8 (148)	5.6 (143)	3.9 (100)	0.5 (13)	0.3 (7)	17.9 (8)	2 @ 1.5 (37) 1 @ 1.1 (28)
480V	7-1/2–15												
FR6													
230V	10–15	22.0 (558)	21.3 (541)	20.4 (519)	9.3 (237)	4.2 (105)	6.5 (165)	7.6 (195)	5.8 (148)	0.6 (15.5)	0.4 (9)	40.8 (19)	3 @ 1.5 (37)
480V	20–30												
575V	2–25												

Approximate Dimensions in Inches (mm)

NEMA Type 1/IP21 and NEMA Type 12/IP54 with Flange Kit, FR4, FR5 and FR6

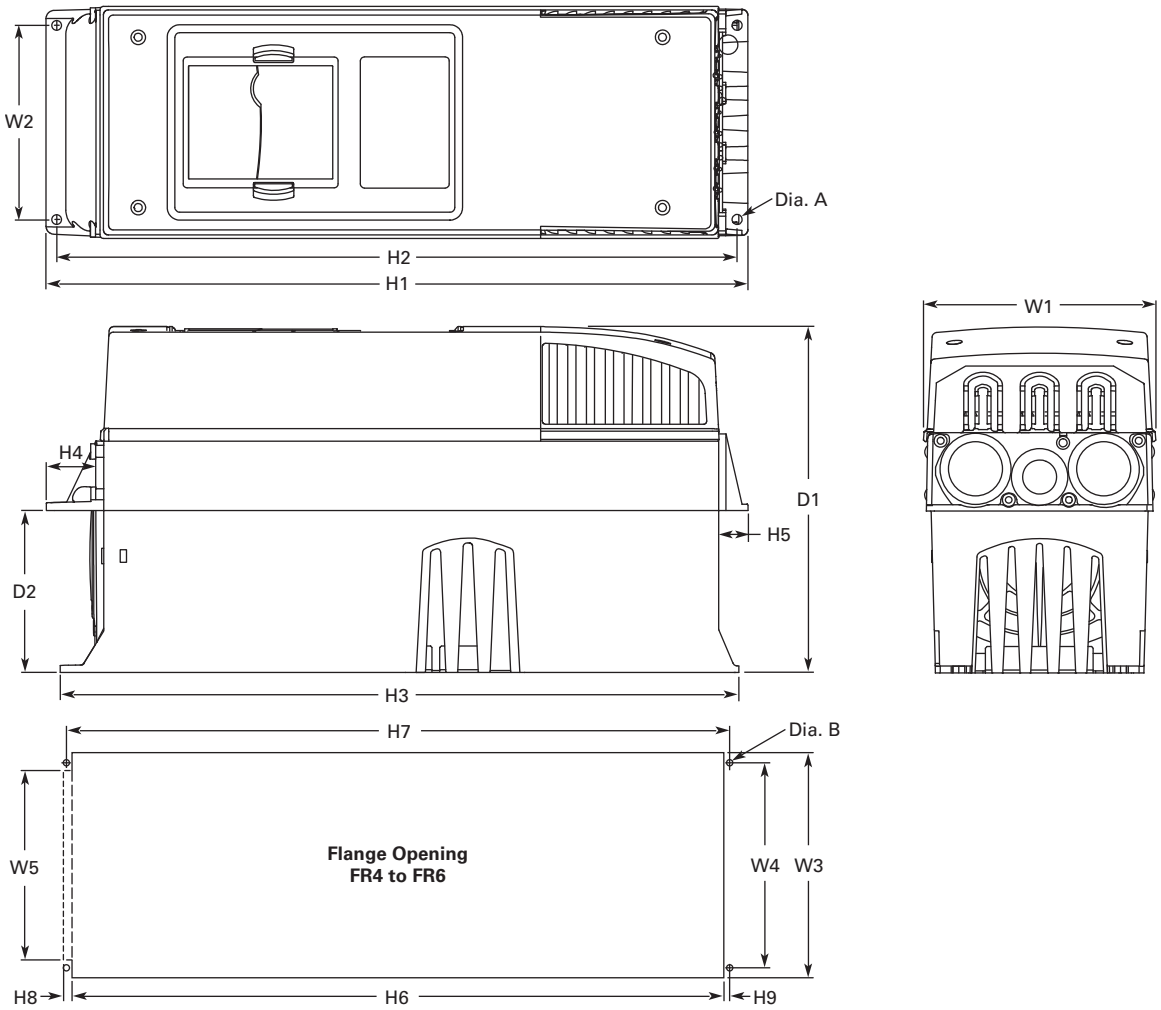

FR4, FR5 and FR6 with Flange Kit

W1	W2	H1	H2	H3	H4	H5	D1	D2	Dia. A
FR4									
5.0 (128)	4.5 (113)	13.3 (337)	12.8 (325)	12.9 (327)	1.2 (30)	0.9 (22)	7.5 (190)	3.0 (77)	0.3 (7)
FR5									
5.6 (143)	4.7 (120)	17.0 (434)	16.5 (420)	16.5 (419)	1.4 (36)	0.7 (18)	8.4 (214)	3.9 (100)	0.3 (7)
FR6									
7.7 (195)	6.7 (170)	22.0 (560)	21.6 (549)	22.0 (558)	1.2 (30)	0.8 (20)	9.3 (237)	4.2 (106)	0.3 (7)

Flange Opening, FR4 to FR6

W3	W4	W5	H6	H7	H8	H9	Dia. B
FR4							
4.8 (123)	4.5 (113)	—	12.4 (315)	12.8 (325)	—	0.2 (5)	0.3 (7)
FR5							
5.3 (135)	4.7 (120)	—	16.2 (410)	16.5 (420)	—	0.2 (5)	0.3 (7)
FR6							
7.3 (185)	6.7 (170)	6.2 (157)	21.2 (539)	21.6 (549)	0.3 (7)	0.2 (5)	0.3 (7)

Approximate Dimensions in Inches (mm)

NEMA Type 1/IP21 and NEMA Type 12/IP54, FR7

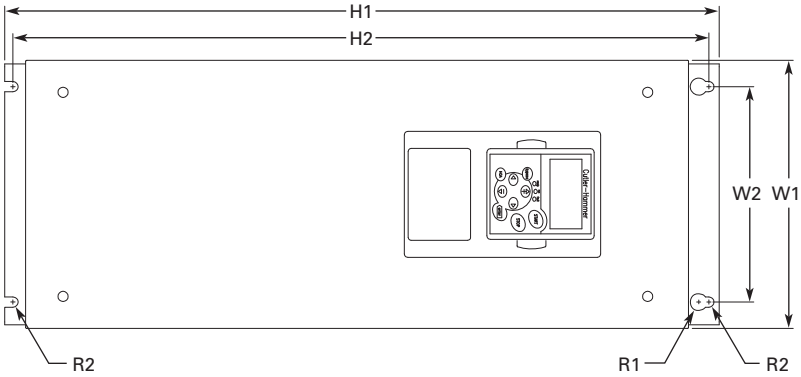

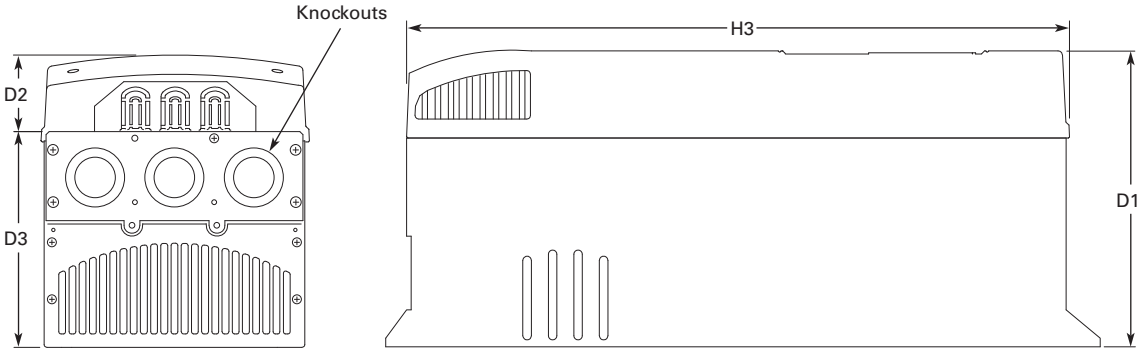

Voltage	hp (I_H)	H1	H2	H3	D1	D2	D3	W1	W2	R1 Dia.	R2 Dia.	Weight Lbs (kg)	Knockouts at Inches (mm) N1 (O.D.)
230V	20–30	24.8 (630)	24.2 (614)	23.2 (590)	10.1 (257)	3.0 (77)	7.3 (184)	9.3 (237)	7.5 (190)	0.7 (18)	0.4 (9)	77.2 (35)	3 at 1.5 (37)
480V	40–60												
575V	30–40												

Approximate Dimensions in Inches (mm)

NEMA Type 1/IP21 and NEMA Type 12/IP54, FR8

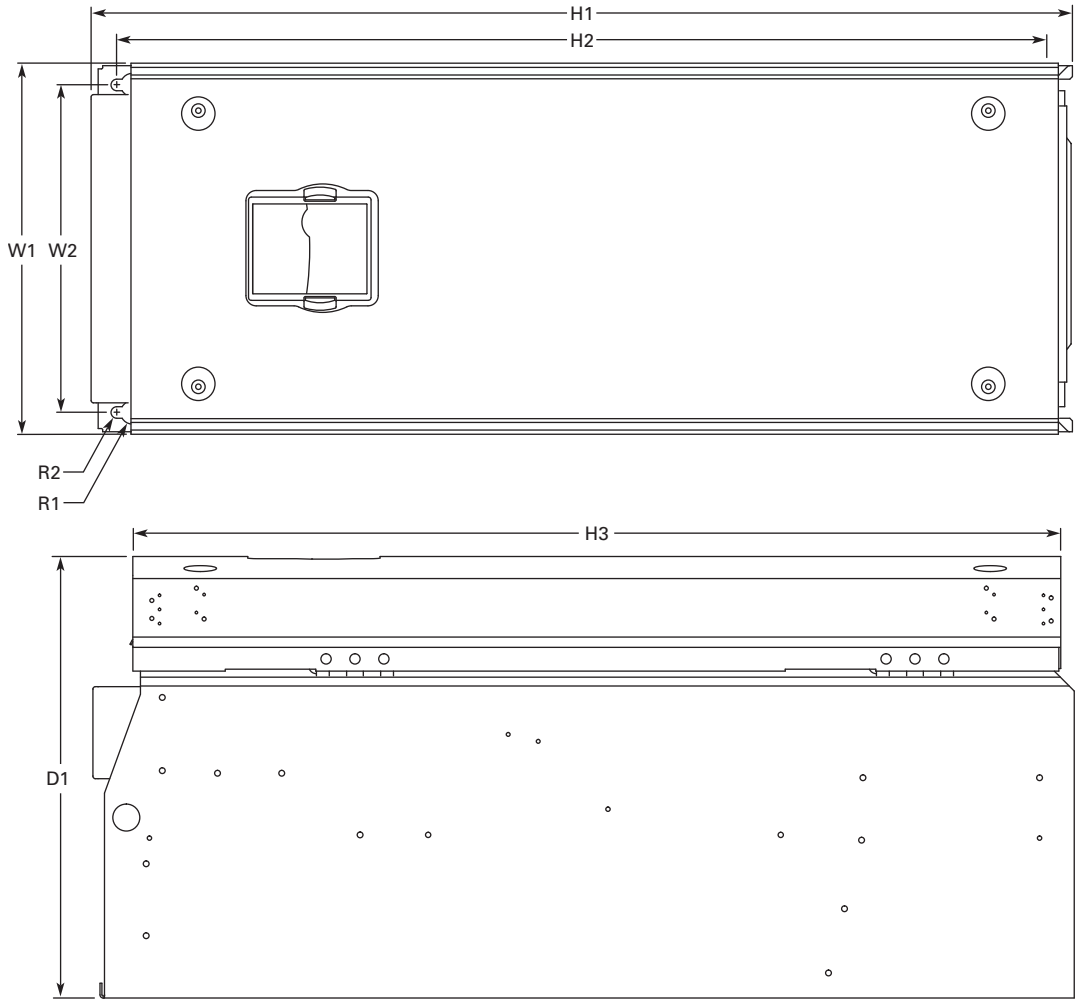

Voltage	hp (I_H)	D1	H1	H2	H3	W1	W2	R1 Dia.	R2 Dia.	Weight Lbs (kg)
230V	40–60	13.5 (344)	30.1 (764)	28.8 (732)	28.4 (721)	11.5 (291)	10 (255)	0.7 (18)	0.4 (9)	127 (58)
480V	75–125									
575V	50–75									

Approximate Dimensions in Inches (mm)

NEMA Type 1/IP21 and NEMA Type 12/IP54, with Flange Kit, FR7 and FR8

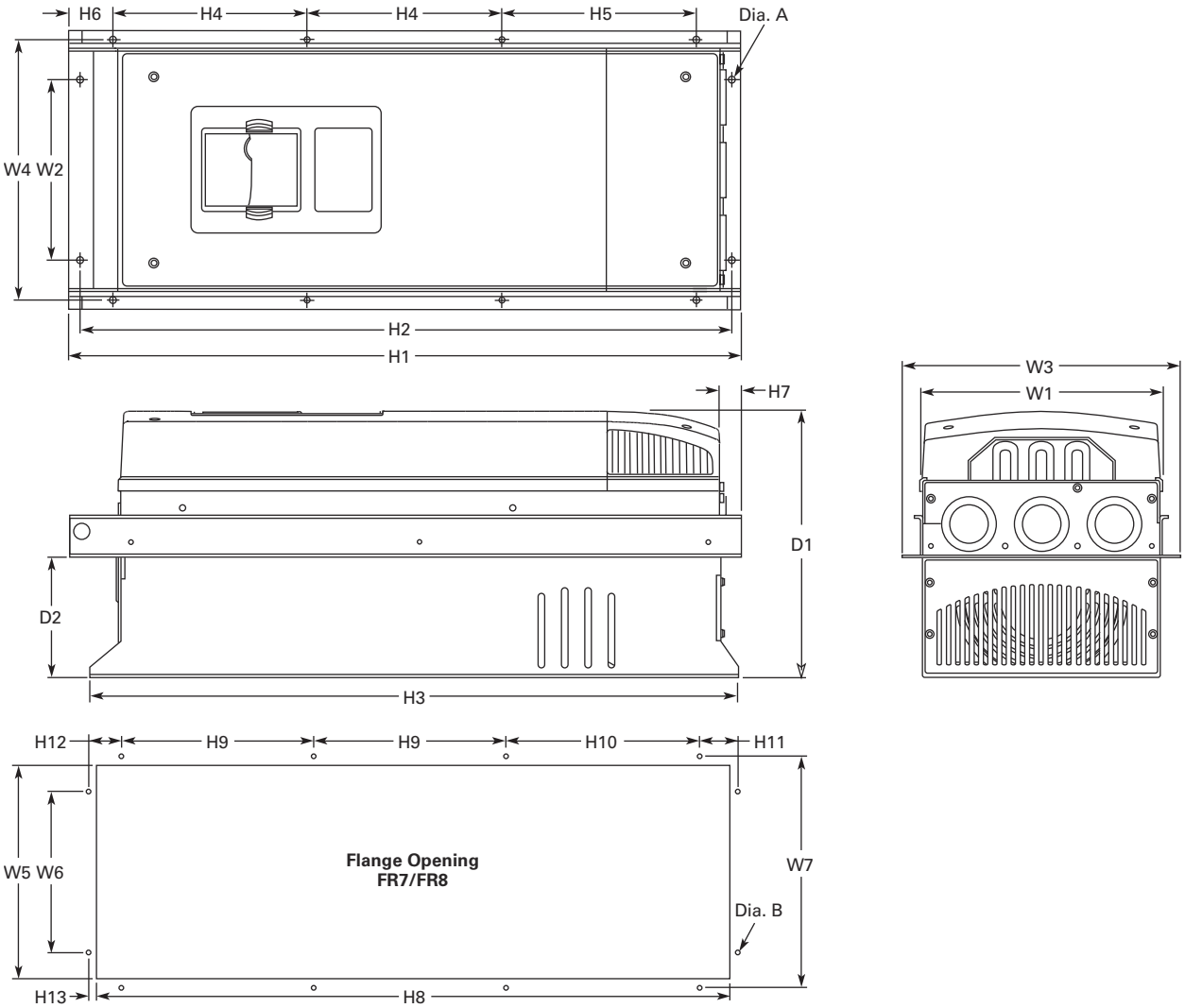

W1	W2	W3	W4	H1	H2	H3	H4	H5	H6	H7	D1	D2	Dia. A
FR7													
9.3 (237)	6.8 (175)	10.6 (270)	10.0 (253)	24.9 (652)	24.8 (632)	24.8 (630)	7.4 (189)	7.4 (189)	0.9 (23)	0.8 (20)	10.1 (257)	4.6 (117)	0.3 (6)
FR8													
11.2 (285)	—	14.0 (355)	13.0 (330)	32.8 (832)	—	29.3 (745)	10.2 (258)	10.4 (265)	1.7 (43)	2.2 (57)	13.5 (344)	4.3 (110)	0.4 (9)

Flange Opening, FR7 and FR8

W5	W6	W7	H8	H9	H10	H11	H12	H13	Dia. B
FR7									
9.2 (233)	6.9 (175)	10.0 (253)	24.4 (619)	7.4 (189)	7.4 (189)	1.4 (35)	1.3 (32)	1.0 (25)	0.3 (6)
FR8									
11.9 (301)	—	13.0 (330)	31.9 (810)	10.2 (258)	10.4 (265)	—	—	1.3 (33)	0.4 (9)

Approximate Dimensions in Inches (mm)

NEMA Type 1/IP21 and NEMA Type 12/IP54, FR9

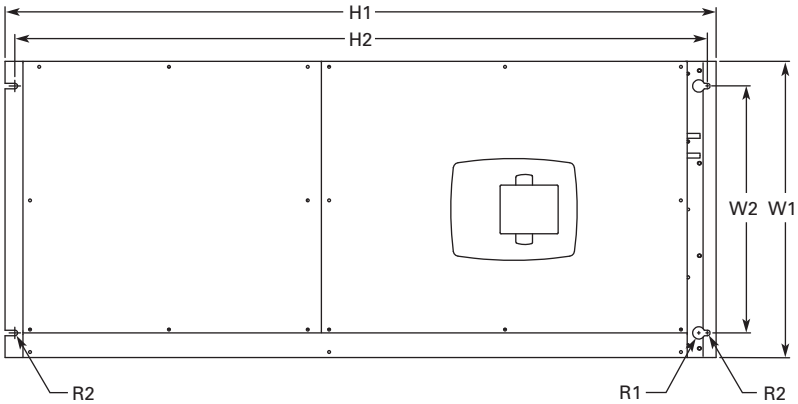

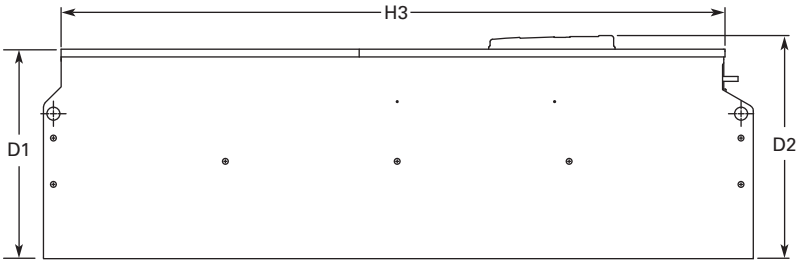

Voltage	hp (I_H)	H1	H2	H3	D1	D2	W1	W2	R1 Dia.	R2 Dia.	Weight Lbs (kg)
230V	75–100	45.3 (1150)	44.1 (1120)	42.4 (1076)	13.4 (340)	14.3 (362)	18.9 (480)	15.7 (400)	0.8 (20)	0.4 (9)	321.9 (146)
480V	150–200										
575V	100–175										

Approximate Dimensions in Inches (mm)

NEMA Type 1/IP21 and NEMA Type 12/IP54 FR9, continued

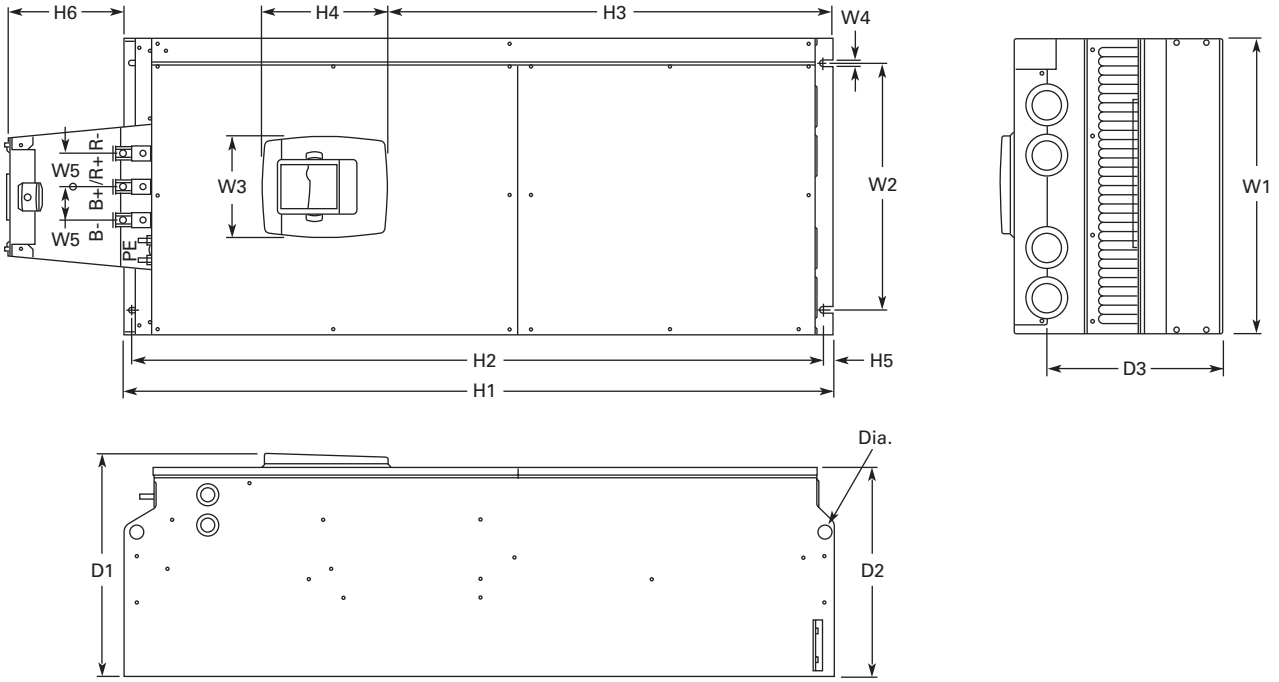

W1	W2	W3	W4	W5	H1	H2	H3	H4	H5	H6 ①	D1	D2	D3	Dia.
18.9 (480)	15.7 (400)	6.5 (165)	0.4 (9)	2.1 (54)	45.3 (1150)	44.1 (1120)	28.3 (721)	8.0 (205)	0.6 (16)	7.4 (188)	14.2 (361.5)	13.4 (340)	11.2 (285)	0.8 (21)

Note

① Brake resistor terminal box (H6) included when brake chopper ordered.

Approximate Dimensions in Inches (mm)

NEMA Type 1/IP21 and NEMA Type 12/IP54, FR9 with Flange Kit

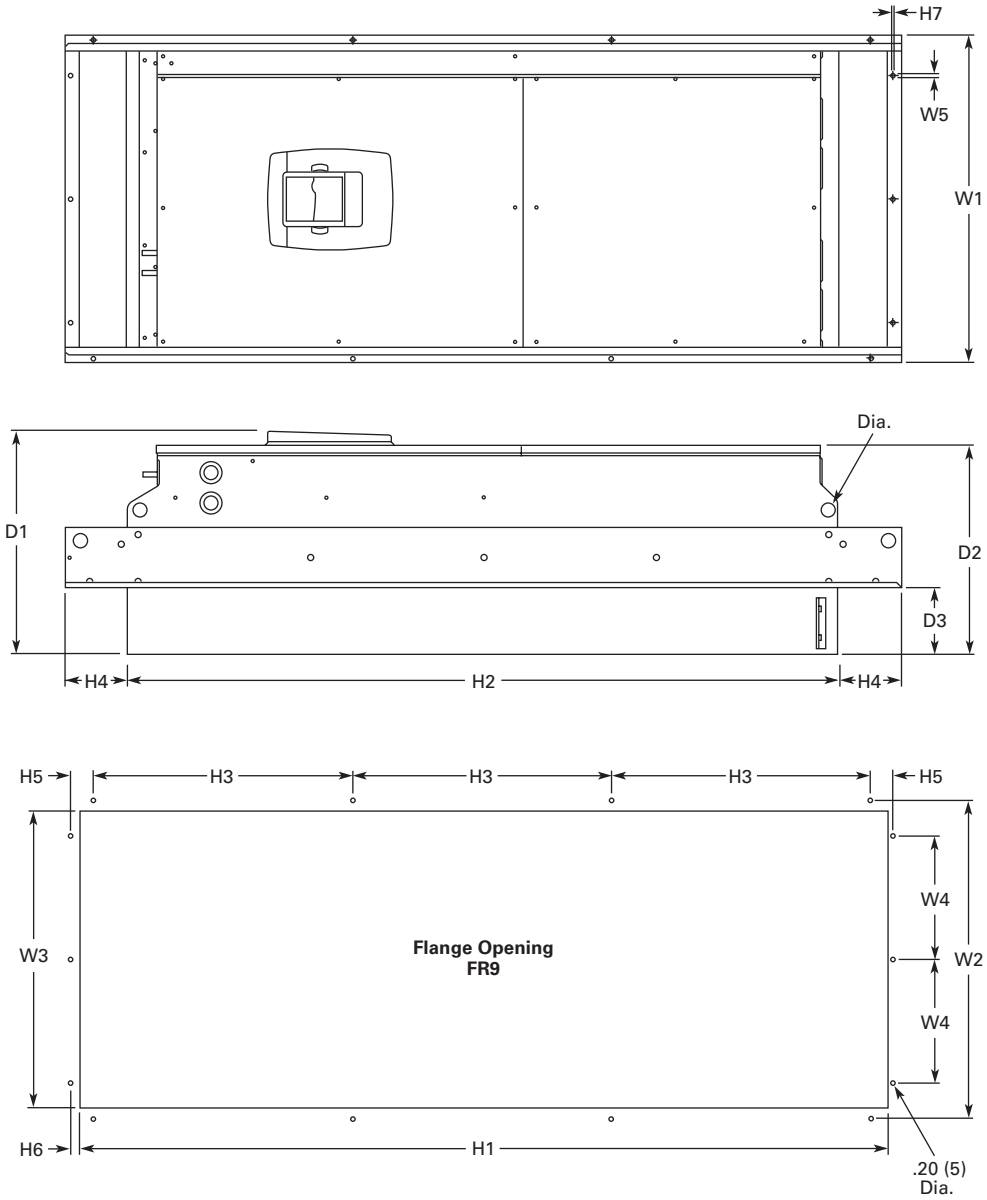

W1	W2	W3	W4	W5	H1	H2	H3	H4	H5	H6	H7	D1	D2	D3	Dia.
20.9 (530)	20.0 (510)	19.1 (485)	7.9 (200)	0.2 (5.5)	51.7 (1312)	45.3 (1150)	16.5 (420)	3.9 (100)	1.4 (35)	0.4 (9)	0.1 (2)	24.9 (362)	13.4 (340)	4.3 (109)	0.8 (21)

Approximate Dimensions in Inches (mm)

NEMA Type 1/IP21 and NEMA Type 12/IP54, FR10 Freestanding

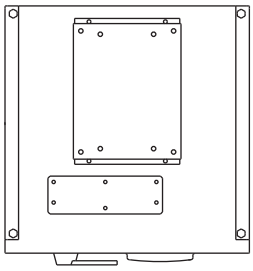

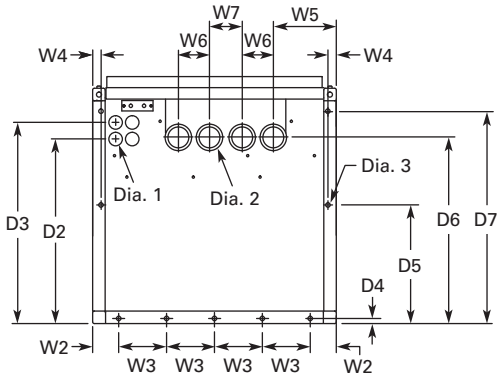

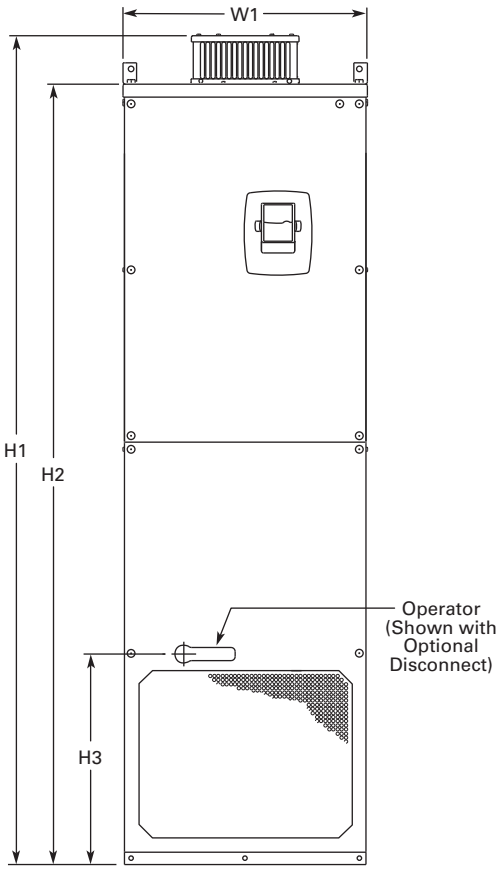

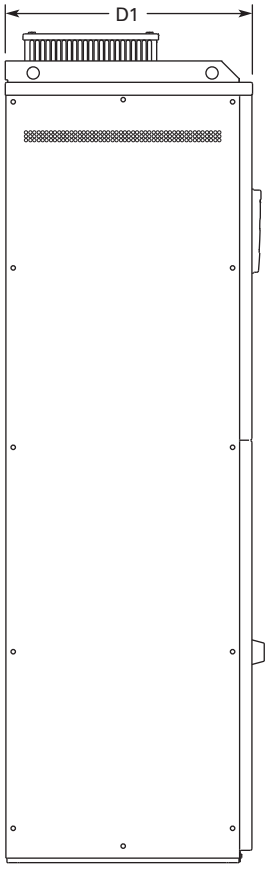

W1	W2	W3	W4	W5	W6	W7	H1	H2	H3	D1	D2	D3	D4	D5	D6	D7	Dia. 1	Dia. 2	Dia. 3	Weight Lbs (kg)
23.43 (595)	2.46 (62.5)	4.53 (115)	0.79 (20)	5.95 (151)	2.95 (75)	30.11 (79)	79.45 (2018)	74.80 (1900)	20.18 (512.5)	23.70 (602)	17.44 (443)	19.02 (483)	0.47 (12)	11.22 (285)	17.60 (447)	20.08 (510)	0.83 (21)	1.89 (48)	0.43 (11)	857 (389)

Approximate Dimensions in Inches (mm)

FR10 Open Chassis ①

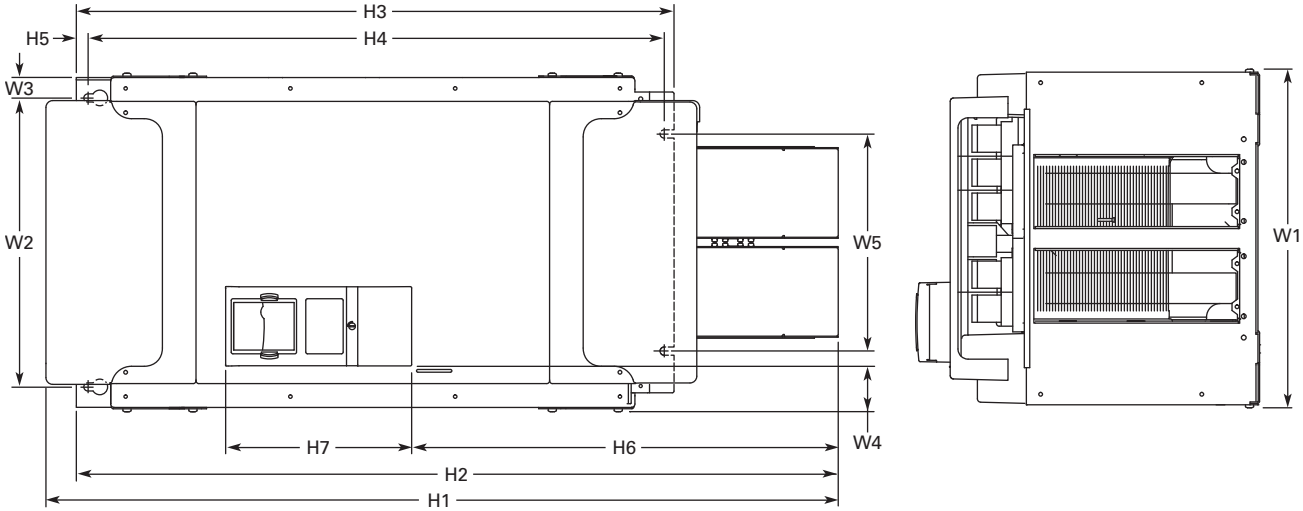

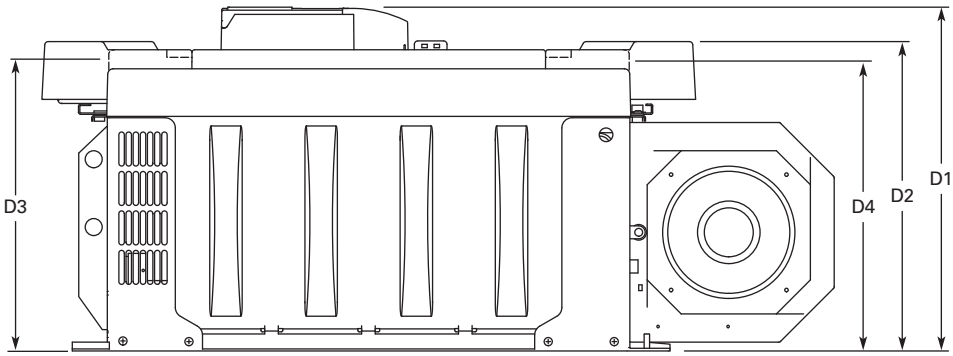

Voltage	hp (I_H)	W1	W2	W3	W4	W5	H1	H2	H3	H4	H5	H6	H7	D1	D2	D3	D4	Weight Lbs (kg)
480V	250–350	19.7 (500)	16.7 (425)	1.2 (30)	2.6 (67)	12.8 (325)	45.9 (1165)	44.1 (1121)	34.6 (879)	33.5 (850)	0.7 (17)	24.7 (627)	10.8 (275)	19.9 (506)	17.9 (455)	16.7 (423)	16.6 (421)	518 (235)
575V	200–300																	

Note

① 9000X FR12 is built of two FR10 modules. Please refer to SPX9000 installation manual for mounting instructions.

Approximate Dimensions in Inches (mm)

NEMA Type 1/IP21, FR11 Freestanding Drive

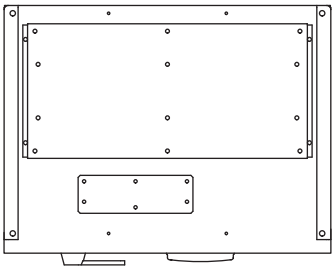

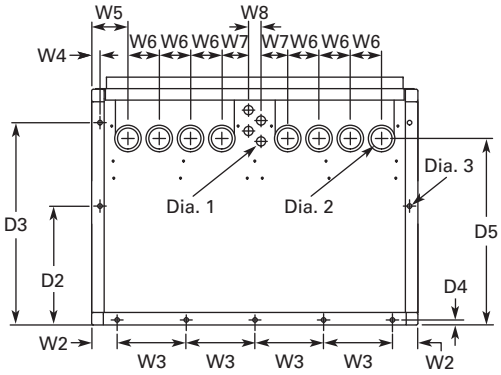

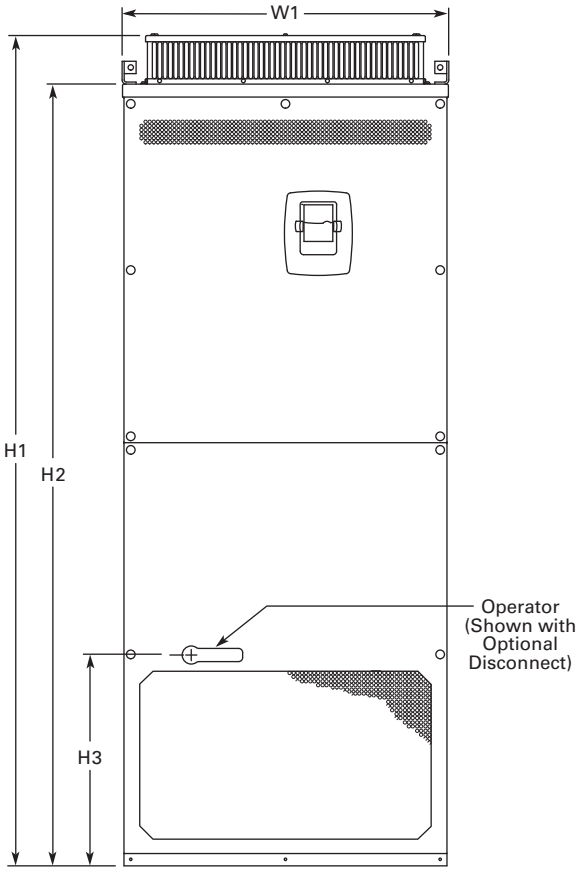

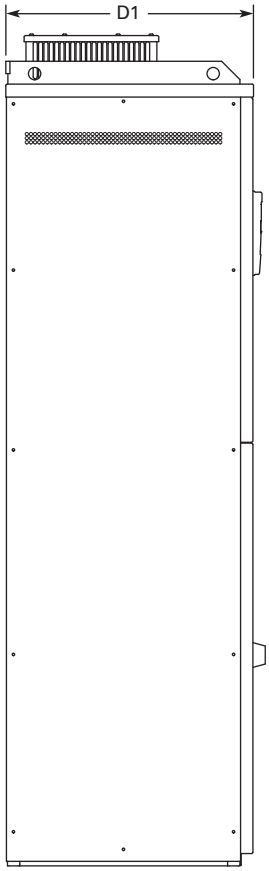

Voltage	hp (I_H)	W1	W2	W3	W4	W5	W6	W7	W8	H1	H2	H3	D1	D2	D3	D4	D5	Dia. 1	Dia. 2	Dia. 3	Weight Lbs (kg)
480	400–550	31.26 (794)	2.40 (61)	6.50 (165)	0.79 (20)	3.43 (87)	2.95 (75)	2.52 (64)	1.18 (30)	79.45 (2018)	74.80 (1900)	20.18 (512.5)	23.70 (602)	11.22 (285)	19.09 (485)	0.47 (12)	17.60 (447)	0.83 (21)	1.89 (48)	0.35 x 0.43 (9 x 11)	526 (239)

Approximate Dimensions in Inches (mm)

FR11 Open Chassis

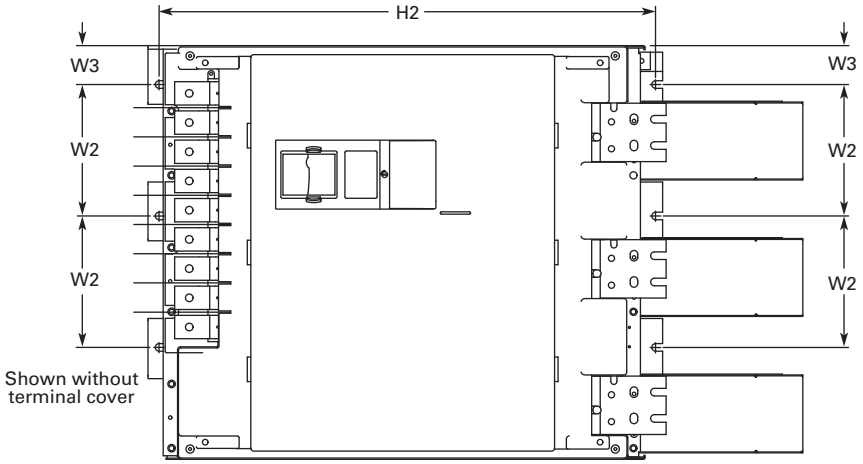

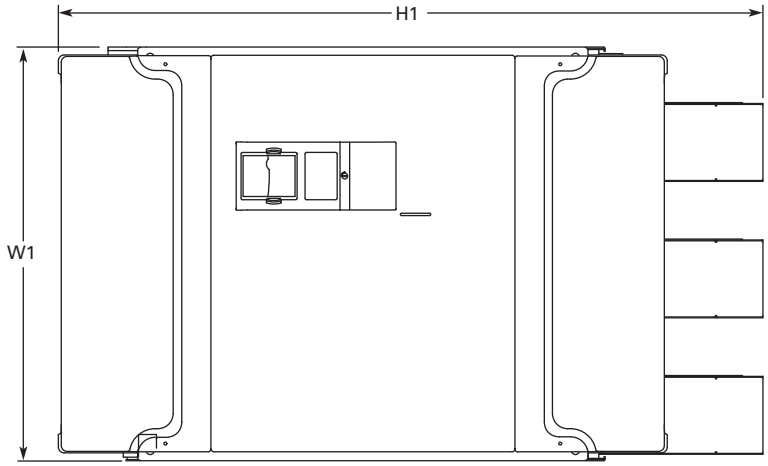

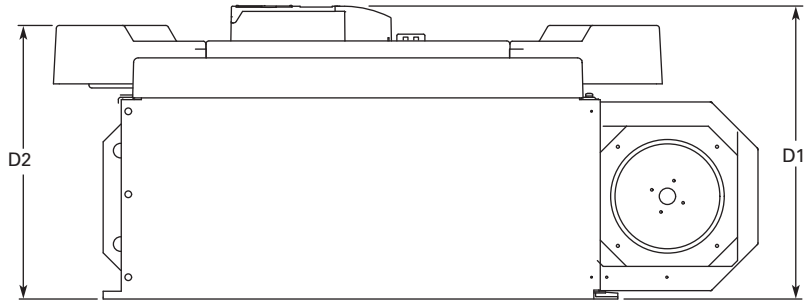

Voltage	hp (I_H)	W1	W2	W3	H1	H2	D1	D2	Weight Lbs (kg)
480V	400–550	27.9 (709)	8.86 (225)	2.6 (67)	45.5 (1155)	33.5 (850)	19.8 (503)	18.4 (468)	833 (378)
575V	400–500								

Approximate Dimensions in Inches (mm)

FR13, Open Chassis Inverter

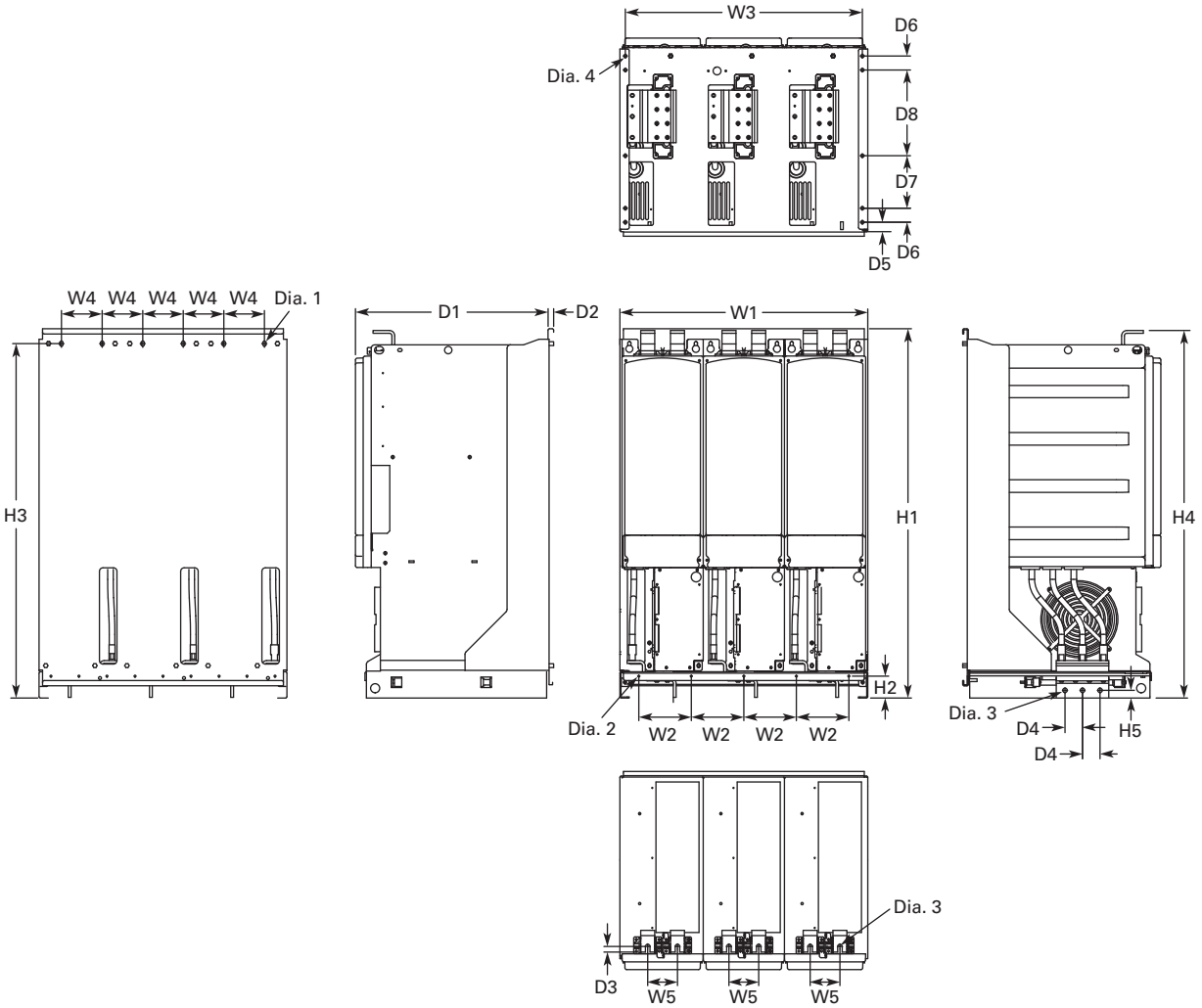

W1	W2	W3	W4	W5	H1	H2	H3	H4	H5	D1	D2	D3	D4	D5	D6	D7	D8	Dia. 1	Dia. 2	Dia. 3	Dia. 4	Weight Lbs (kg)
27.87 (708)	5.91 (150)	26.65 (677)	4.57 (116)	3.35 (85)	41.54 (1055)	2.46 (62.5)	39.86 (1012.5)	41.34 (1050)	0.79 (20)	21.77 (553)	0.51 (13)	0.63 (16)	1.97 (50)	1.06 (27)	1.57 (40)	5.91 (150)	9.64 (244.8)	0.35x0.59 (9x15)	0.18 (4.6)	0.51 (13)	0.37 (9.5)	683 (310)

Notes

9000X FR14 is built of two FR13 modules. Please refer to SPX9000 installation manual for mounting instructions.

FR13 is built from an inverter module and a converter module. Please refer to SPX9000 installation manual for mounting instructions.

Approximate Dimensions in Inches (mm)

FR13, Open Chassis Converter

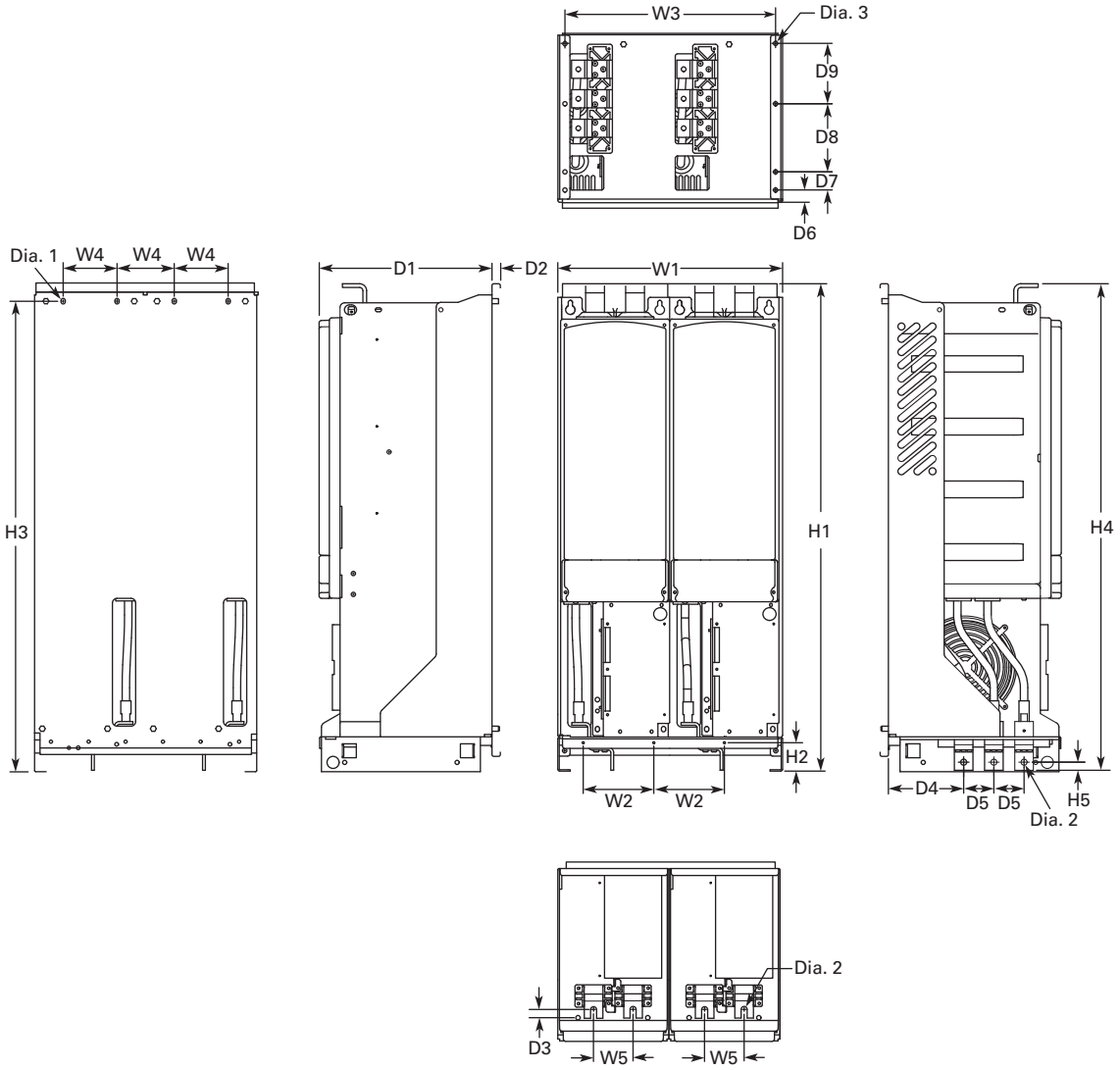

W1	W2	W3	W4	W5	H1	H2	H3	H4	H5	D1	D2	D3	D4	D5	D6	D7	D8	D9	Dia. 1	Dia. 2	Dia. 3	Weight Lbs (kg)
18.74 (476)	5.91 (150)	17.52 (445)	4.57 (116)	3.35 (85)	41.54 (1055)	2.46 (62.5)	39.86 (1012.5)	41.34 (1050)	0.69 (17.5)	14.69 (373)	0.51 (13)	0.73 (18.5)	6.42 (163)	2.56 (65)	1.06 (27)	1.57 (40)	5.91 (150)	5.24 (133)	0.35x0.59 (9x15)	0.51 (13)	0.37 (9.5)	295 (134)

Number of Input Units

480V Catalog Number	hp	Input Modules
SPX800A0-4A2N1	800	2

690V Catalog Number	hp	Input Modules
SPX800A0-5A2N1	800	2
SPX900A0-5A2N1	900	2
SPXH10A0-5A2N1	1000	2

Approximate Dimensions in Inches (mm)

FR13, Open Chassis Converter—900/1000 hp 480V

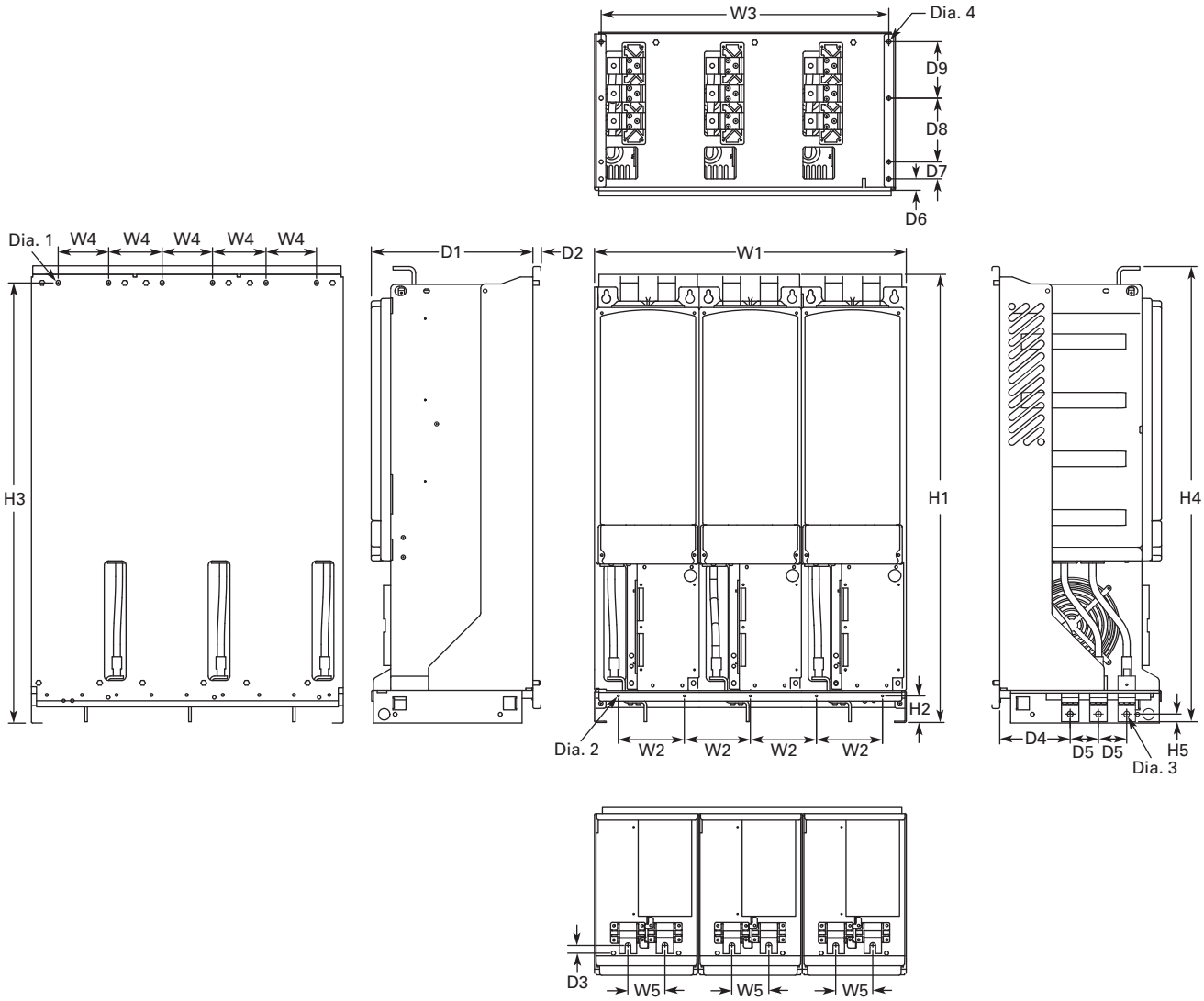

W1	W2	W3	W4	W5	H1	H2	H3	H4	H5	D1	D2	D3	D4	D5	D6	D7	D8	D9	Dia. 1	Dia. 2	Dia. 3	Dia. 4	Weight Lbs (kg)
27.87 (708)	5.91 (150)	26.65 (677)	4.57 (116)	3.35 (85)	41.54 (1055)	2.46 (62.5)	39.86 (1012.5)	41.34 (1050)	0.69 (17.5)	14.69 (373)	0.51 (13)	0.73 (18.5)	6.42 (163)	2.56 (65)	1.06 (27)	1.57 (40)	5.91 (150)	5.24 (133)	0.35x0.59 (9x15)	0.18 (4.6)	0.51 (13)	0.37 (9.5)	443 (201)

Number of Input Units

480V Catalog Number	hp	Input Modules
SPX900A0-4A2N1	900	3
SPXH10A0-4A2N1	1000	3

Approximate Dimensions in Inches (mm)

AC Choke Dimensions

Choke Types

Catalog Number	Frame Size	Choke Type ①
Voltage Range 380–500V		
SPX 250 4	FR10	CHK0400
SPX 300 4		CHK0520
SPX 350 4		CHK0520
SPX 400 4	FR11	2 x CHK0400
SPX 500 4		2 x CHK0400
SPX 550 4		2 x CHK0400
SPX 600 4	FR12	2 x CHK0520
SPX 650 4		2 x CHK0520
SPX 700 4		2 x CHK0520
SPX 800 4	FR13	2 x CHK0400
SPX 900 4		3 x CHK0520
SPX H10 4		3 x CHK0520
SPX H12 4	FR14	4 x CHK0520
SPX H16 4		6 x CHK0400

Catalog Number	Frame Size	Choke Type ①
Voltage Range 525–690V		
SPX 200 5	FR10	CHK0261
SPX 250 5		CHK0400
SPX 300 5		CHK0400
SPX 400 5	FR11	CHK0520
SPX 450 5		CHK0520
SPX 500 5		2 x CHK0400
SPX 550 5	FR12	2 x CHK0400
SPX 600 5		2 x CHK0400
SPX 700 5		2 x CHK0400
SPX 800 5	FR13	2 x CHK0400
SPX 900 5		2 x CHK0400
SPX H10 5		2 x CHK0400
SPX H13 5	FR14	4 x CHK0400
SPX H15 5		6 x CHK0400

CHK0520

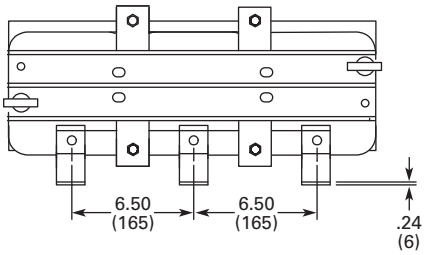

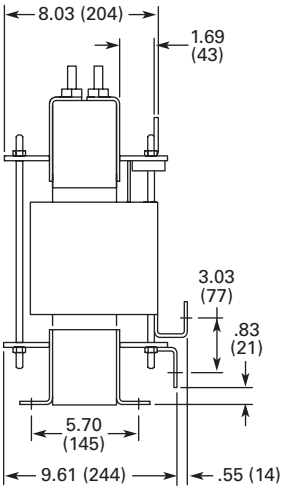

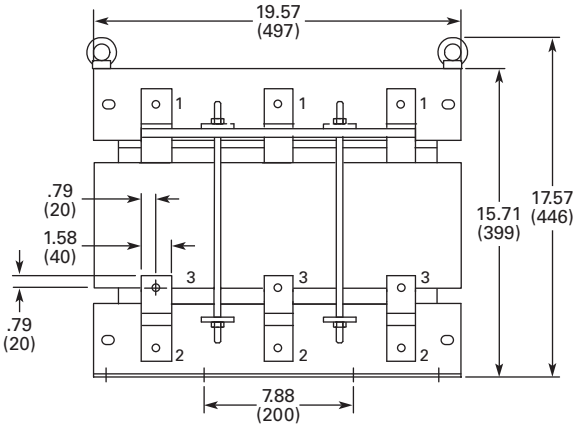

Note

① Chokes are provided with all FR10–FR14 drives.

Approximate Dimensions in Inches (mm)

CHK0400

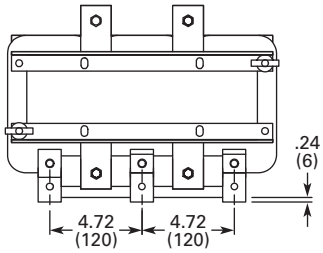

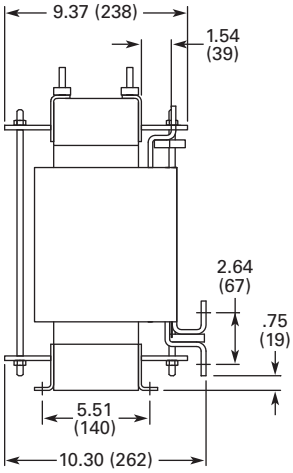

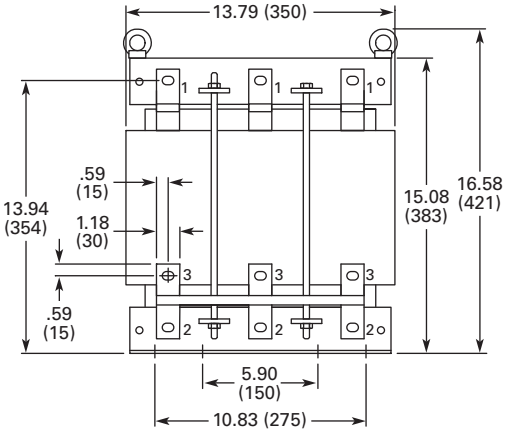

CHK0261

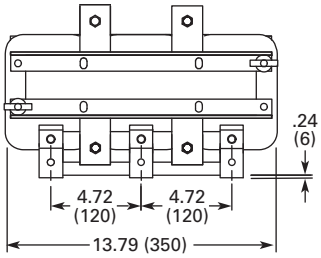

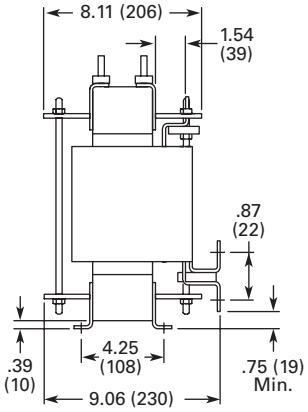

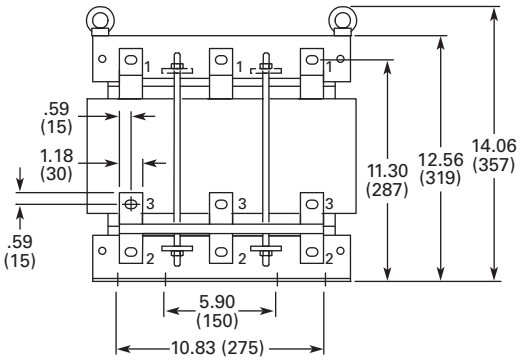

SVX9000 Enclosed Drives

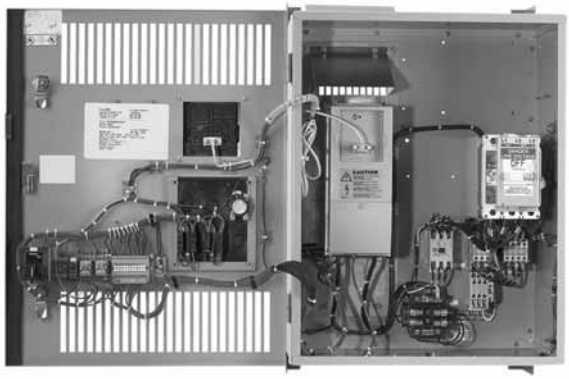

Contents

Description	*Page*
SVX9000 Open Drives	**V6-T2-17**
SVX9000 Enclosed Drives	
Product Identification	**V6-T2-53**
Catalog Number Selection	**V6-T2-54**
Product Selection	**V6-T2-55**
Options	**V6-T2-59**
Technical Data and Specifications	**V6-T2-65**
Wiring Diagram	**V6-T2-66**
Dimensions	**V6-T2-67**
SVX9000 VFD Pump Panels	**V6-T2-78**

SVX9000 Enclosed Drives

Product Description

- **Standard Enclosed—** covers a wide range of the most commonly ordered options. Pre-engineering eliminates the lead time normally associated with customer specific options.
- **Modified Standard Enclosed**—applies to specific customer requirements that vary from the standard enclosed offering, such as the need for an additional indicating light or minor modifications to drawings. *Consult your Eaton representative for assistance in pricing and lead time.*
- **Custom Engineered**—for those applications with more unique or complex requirements, these are individually engineered to the customer's needs. *Consult your Eaton representative for assistance in pricing and lead time.*

Features

- NEMA Type 1/IP21 or NEMA Type 12/IP54 enclosures
- Input voltage: 208V, 230V, 480V and 575V (consult factory)
- Complete range of control, network and power options
- Horsepower range:
  - 208V—3/4 to 100 hp I_H; 1 to 100 hp I_L
  - 230V—3/4 to 100 hp I_H; 1 to 100 hp I_L
  - 480V—1 to 700 hp I_H; 1-1/2 to 800 hp I_L
- HMCP padlockable

Standards and Certifications

- UL Listed
- cUL Listed

Listed Listed

Product Identification

Enclosed 9000X Series Drive

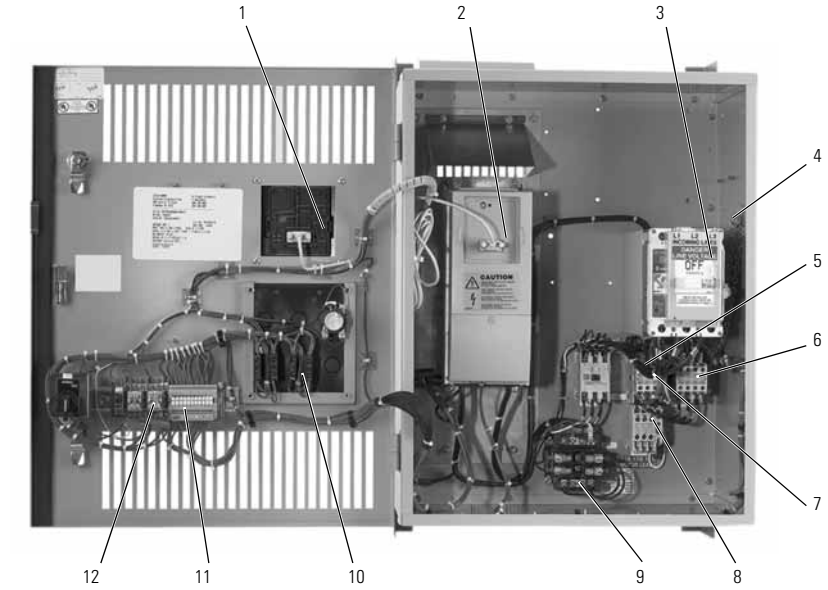

1 Door mounted keypad (included as standard with bypass option)

2 SVX9000 variable frequency drive

3 Input disconnect (HMCP)
- Option P1

4 Input line fuses
- Option P3

5 Input contactor (included as standard with bypass option)

6 Output contactor
- Option PE (included as standard with bypass option)

7 Bypass contactor
- Option RB
- Option RA

8 Overload relay
- Option PH
- Option PI

9 115V control transformer
- Option KB

10 Bypass pilot lights and selector switches
- Option RB
- Option RA
- Option L2
- Option KF

11 Customer control and signal connection terminal block

12 Control relay

Catalog Number Selection

SVX9000 Enclosed NEMA Type 1/IP21 and NEMA Type 12/IP54 Drives

SVX F07 1 4 A A

Product Family
SVX = Enclosed drives

Horsepower Rating		
F07 = 3/4 hp	**025** = 25 hp	**250** = 250 hp
001 = 1 hp	**030** = 30 hp	**300** = 300 hp
F15 = 1-1/2 hp	**040** = 40 hp	**350** = 350 hp
002 = 2 hp	**050** = 50 hp	**400** = 400 hp
003 = 3 hp	**060** = 60 hp	**500** = 500 hp
005 = 5 hp	**075** = 75 hp	**550** = 550 hp
007 = 7-1/2 hp	**100** = 100 hp	**600** = 600 hp
010 = 10 hp	**125** = 125 hp	**650** = 650 hp
015 = 15 hp	**150** = 150 hp	**700** = 700 hp
020 = 20 hp	**200** = 200 hp	**800** = 800 hp

Enclosure Rating
1 = NEMA Type 1/IP21
2 = NEMA Type 12/IP54
6 = NEMA Type 12/IP54 filtered

Voltage Rating
1 = 208V
2 = 230V
4 = 480V

Application—Torque/Braking ②
A = I_L/no brake chopper
B = I_L/internal brake chopper
D = I_H/no brake chopper
E = I_H/internal brake chopper

Enclosed Style
A = Enclosed drive

Build Alphabetically and Numerically

_ _ _ _ _ _ _ _ _ _

Enclosed Options ①④⑤		Type
K1	Door-mounted speed potentiometer ③	Control
K2	Door-mounted speed potentiometer with HOA selector switch ③	Control
K3	3–15 psig follower	Control
K4	HAND/OFF/AUTO switch (22 mm)	Control
K5	MANUAL/AUTO ref switch (22 mm)	Control
K6	START/STOP pushbuttons (22 mm)	Control
KB	115V control transformer (550 VA)	Control
KF	Bypass test switch for RA and RB	Addl. bypass
KO	Standard elapsed time meter	Control
L1	Power on and fault pilot lights	Light
L2	Bypass pilot lights for RA, RB bypass options	Addl. bypass
LA	Green RUN light (22 mm)	Light
LD	Green STOP light (22 mm)	Light
LE	Red RUN light	Light
LF	Red STOP light (22 mm)	Light
LJ	White power on light (22 mm)	Light
LU	Misc. light (22 mm)	Light
P1	Input disconnect (HMCP) 100 kAIC	Input
P2	Disconnect switch ⑦	Input
P3	Input line fuses (200 kAIC)	Input
P7	Input power surge protection	Input
PE	Output contactor	Output
PF	Output filter	Output
PG	MotoRx (up to 600 ft) 1000 V/µS DV/DT filter	Output
PH	Single overload relay	Output
PI	Dual overload relays	Output
PN	Dual overloads for bypass	Addl. bypass
RA	Manual HOA bypass controller	Bypass
RB	Manual IOB bypass controller	Bypass
RC	Auto transfer HOA bypass controller	Bypass
RD	Auto transfer IOB bypass controller	Bypass
S5	Floor stand 22 in	Enclosure
S6	Floor stand 12 in	Enclosure
S7	10 in expansion	Enclosure
S8	20 in expansion	Enclosure
S9	Space heater	Enclosure

Communication Options ⑥		
C2 = Modbus	**C6** = CanOpen (slave)	**CA** = Johnson Controls N2
C3 = Profibus DP	**C7** = DeviceNet	**CI** = Modbus TCP
C4 = LonWorks	**C8** = Modbus (D9 type connector)	**CJ** = BACnet
C5 = Profibus DP (D9 connector)		**CK** = Ethernet IP
		C3 = RS-232 with D9 connection

Control Options	
B1 = 6 DI, 1 ext +24 Vdc/EXT +24 Vdc	**B5** = 3 RO (NO)
B2 = 1 RO (NC-NO), 1 RO (NO), 1 therm	**B8** = 1 ext +24 Vdc/EXT +24 Vdc, 3 Pt100
B4 = 1 AI (mA isolated), 2 AO (mA isolated), 1 ext +24 Vdc/EXT +24 Vdc	**B9** = 1 RO (NO), 5 DI 42–240 Vac input

Engineered Options	
HT	High temperature rating for 50°C (FR10 and above) ⑧
VB	Varnished boards

Notes

① Local/remote keypad is included as the standard control panel.
② Brake chopper is a factory installed option only, see drive options on **Page V6-T2-18**. External dynamic braking resistors not included. Consult factory.
③ Includes local/remote speed reference switch.
④ Some options are voltage and/or horsepower specific. Consult your Eaton representative for details.
⑤ See **Pages V6-T2-61** and **V6-T2-62** for descriptions.
⑥ See **Pages V6-T2-59** and **V6-T2-60** for complete descriptions.
⑦ Applicable only with FR10 and FR11 freestanding designs.
⑧ Consult Eaton for availability.

Product Selection

When Ordering

- Select a base catalog number that meets the application requirements—nominal horsepower, voltage and enclosure rating (the enclosed drive's continuous output amp rating should be equal to or greater than the motor's full load amp rating). The base enclosed package includes a standard drive, door mounted local/remote keypad and enclosure.
- If dynamic brake chopper or control/communication option is desired, change the appropriate code in the base catalog number.
- Select enclosed options. Add the codes as suffixes to the base catalog number in alphabetical and numeric order.
- **Read all footnotes**.

208V Drives

SVX9000 Enclosed Drives

Input Base Drives

			NEMA Type 1/IP21		NEMA Type 12/IP54	
Enclosure Size ①	hp	Current (A)	Frame Size	Base Catalog Number ②	Frame Size	Base Catalog Number ②
High Overload Drive and Enclosure						
0	3/4	3.7	4	**SVXF0711EA**	4	**SVXF0721EA**
	1	4.8		**SVX00111EA**		**SVX00121EA**
	1-1/2	6.6		**SVXF1511EA**		**SVXF1521EA**
	2	7.8		**SVX00211EA**		**SVX00221EA**
	3	11		**SVX00311EA**		**SVX00321EA**
0	5	17.5	5	**SVX00511EA**	5	**SVX00521EA**
	7-1/2	25		**SVX00711EA**		**SVX00721EA**
1	10	31	6	**SVX01011EA**	6	**SVX01021EA**
	15	48		**SVX01511EA**		**SVX01521EA**
2	20	61	7	**SVX02011DA**	7	**SVX02021DA**
	25	75		**SVX02511DA**		**SVX02521DA**
	30	88		**SVX03011DA**		**SVX03021DA**
3	40	114	8	**SVX04011DA**	8	**SVX04021DA**
4	50	143	8	**SVX05011DA**	8	**SVX05021DA**
5	60	170	8	**SVX06011DA**	8	**SVX06021DA**
	75	211	9	**SVX07511DA**	9	**SVX07521DA**
	100	273		**SVX10011DA**		**SVX10021DA**
Low Overload Drive and Enclosure						
0	1	4.8	4	**SVX00111BA**	4	**SVX00121BA**
	1-1/2	6.6		**SVXF1511BA**		**SVXF1521BA**
	2	7.8		**SVX00211BA**		**SVX00221BA**
	3	11		**SVX00311BA**		**SVX00321BA**
	5	17.5	5	**SVX00511BA**	5	**SVX00521BA**
	7-1/2	25		**SVX00711BA**		**SVX00721BA**
	10	31		**SVX01011BA**		**SVX01021BA**
1	15	48	6	**SVX01511BA**	6	**SVX01521BA**
	20	61		**SVX02011BA**		**SVX02021BA**
2	25	75	7	**SVX02511AA**	7	**SVX02521AA**
	30	88		**SVX03011AA**		**SVX03021AA**
	40	114		**SVX04011AA**		**SVX04021AA**
3	50	—	8	**SVX05011AA**	8	**SVX05021AA**
4	60	170	8	**SVX06011AA**	8	**SVX06021AA**
5	③	205 ③	8	**SVX07511AA**	8	**SVX07521AA**
	③	261 ③	9	**SVX10011AA**	9	**SVX10021AA**

Notes

For brake chopper options, see **Page V6-T2-63**.

① See enclosure dimensions starting on **Page V6-T2-67**.

② Includes drive, local/remote keypad and enclosure.

③ These units are current rated (75 I_L hp 205 amps, 100 I_L hp 261 amps). They are not hp rated.

230V Drives

SVX9000 Enclosed Drives

Input Base Drives

Enclosure Size ①	hp	Current (A)	NEMA Type 1/IP21 Frame Size	NEMA Type 1/IP21 Base Catalog Number ②	NEMA Type 12/IP54 Frame Size	NEMA Type 12/IP54 Base Catalog Number ②
High Overload Drive and Enclosure						
0	3/4	3.7	4	**SVXF0712EA**	4	**SVXF0722EA**
	1	4.8		**SVX00112EA**		**SVX00122EA**
	1-1/2	6.6		**SVXF1512EA**		**SVXF1522EA**
	2	7.8		**SVX00212EA**		**SVX00222EA**
	3	11		**SVX00312EA**		**SVX00322EA**
	5	17.5	5	**SVX00512EA**	5	**SVX00522EA**
	7-1/2	25		**SVX00712EA**		**SVX00722EA**
1	10	31	6	**SVX01012EA**	6	**SVX01022EA**
	15	48		**SVX01512EA**		**SVX01522EA**
2	20	61	7	**SVX02012DA**	7	**SVX02022DA**
	25	75		**SVX02512DA**		**SVX02522DA**
	30	88		**SVX03012DA**		**SVX03022DA**
3	40	114	8	**SVX04012DA**	8	**SVX04022DA**
4	50	140	8	**SVX05012DA**	8	**SVX05022DA**
5	60	170	8	**SVX06012DA**	8	**SVX06022DA**
	75	205	9	**SVX07512DA**	9	**SVX07522DA**
	100	261		**SVX10012DA**		**SVX10022DA**
Low Overload Drive and Enclosure						
0	1	4.8	4	**SVX00112BA**	4	**SVX00122BA**
	1-1/2	6.6		**SVXF1512BA**		**SVXF1522BA**
	2	7.8		**SVX00212BA**		**SVX00222BA**
	3	11		**SVX00312BA**		**SVX00322BA**
	5	17.5	5	**SVX00512BA**	5	**SVX00522BA**
	7-1/2	25		**SVX00712BA**		**SVX00722BA**
	10	31		**SVX01012BA**		**SVX01022BA**
1	15	48	6	**SVX01512BA**	6	**SVX01522BA**
	20	61		**SVX02012BA**		**SVX02022BA**
2	25	75	7	**SVX02512AA**	7	**SVX02522AA**
	30	88		**SVX03012AA**		**SVX03022AA**
	40	114		**SVX04012AA**		**SVX04022AA**
3	50	140	8	**SVX05012AA**	8	**SVX05022AA**
4	60	170	8	**SVX06012AA**	8	**SVX06022AA**
5	75	205	8	**SVX07512AA**	8	**SVX07522AA**
	③	261 ③	9	**SVX10012AA**	9	**SVX10022AA**

Notes

For brake chopper options, see **Page V6-T2-63**.

① See enclosure dimensions starting on **Page V6-T2-67**.

② Includes drive, local/remote keypad and enclosure.

③ This unit is current rated (100 I_L hp 100 amps, 261 I_L hp). It is not hp rated.

480V Drives

SVX9000 Enclosed Drives

Input Base Drives

			NEMA Type 1/IP21		NEMA Type 12/IP54	
Enclosure Size ①	**hp**	**Current (A)**	**Frame Size**	**Base Catalog Number ②**	**Frame Size**	**Base Catalog Number ②**
High Overload Drive and Enclosure						
0	1	2.2	4	**SVX00114EA**	4	**SVX00124EA**
	1-1/2	3.3		**SVXF1514EA**		**SVXF1524EA**
	2	4.3		**SVX00214EA**		**SVX00224EA**
	3	5.6		**SVX00314EA**		**SVX00324EA**
	5	7.6		**SVX00514EA**		**SVX00524EA**
	7-1/2	12	5	**SVX00714EA**	5	**SVX00724EA**
	10	16		**SVX01014EA**		**SVX01024EA**
	15	23		**SVX01514EA**		**SVX01524EA**
1	20	31	6	**SVX02014EA**	6	**SVX02024EA**
	25	38		**SVX02514EA**		**SVX02524EA**
	30	46		**SVX03014EA**		**SVX03024EA**
2	40	61	7	**SVX04014DA**	7	**SVX04024DA**
	50	72		**SVX05014DA**		**SVX05024DA**
	60	87		**SVX06014DA**		**SVX06024DA**
3	75	105	8	**SVX07514DA**	8	**SVX07524DA**
	100	140		**SVX10014DA**		**SVX10024DA**
4	125	170	8	**SVX12514DA**	8	**SVX12524DA**
5	150	205	9	**SVX15014DA**	9	**SVX15024DA**
	200	245		**SVX20014DA**		**SVX20024DA**
6, 8 ③④	250	300	10	**SVX25014DA**	10	**SVX25064DA**
	300	385		**SVX30014DA**		**SVX30064DA**
	350	460		**SVX35014DA**		**SVX35064DA**
8, 9 ④⑤	400	520	11	**SVX40014DA**	11	**SVX40064DA**
	500	590		**SVX50014DA**		**SVX50064DA**
	550	650		**SVX55014DA**		**SVX55064DA**
⑥	600	730	12	**SVX60014DA**	12	**SVX60064DA**
	650	820		**SVX65014DA**		**SVX65064DA**
	700	920		**SVX70014DA**		**SVX70064DA**

Notes

For brake chopper options, see **Page V6-T2-63**.

① See enclosure dimensions starting on **Page V6-T2-67**.

② Includes drive, local/remote keypad and enclosure.

③ The smaller enclosure Size 6 accommodates only power options, input disconnect (P1) and input line fuses (P3). Bypass and other options require Size 8. Adding any standard control option will not require the larger enclosure.

④ For other options, consult factory.

⑤ The smaller enclosure Size 8 accommodates only power options, input disconnect (P1) and input line fuses (P3). Bypass and other options require Size 9. Adding any standard control option will not require the larger enclosure.

⑥ Consult Eaton.

SVX9000 Enclosed Drives

Input Base Drives, continued

Enclosure Size ①	hp	Current (A)	NEMA Type 1/IP21 Frame Size	NEMA Type 1/IP21 Base Catalog Number ②	NEMA Type 12/IP54 Frame Size	NEMA Type 12/IP54 Base Catalog Number ②
Low Overload Drive and Enclosure						
0	1-1/2	3.3	4	**SVXF1514BA**	4	**SVXF1524BA**
	2	4.3		**SVX00214BA**		**SVX00224BA**
	3	5.6		**SVX00314BA**		**SVX00324BA**
	5	7.6		**SVX00514BA**		**SVX00524BA**
	7-1/2	12		**SVX00714BA**		**SVX00724BA**
	10	16	5	**SVX01014BA**	5	**SVX01024BA**
	15	23		**SVX01514BA**		**SVX01524BA**
	20	31		**SVX02014BA**		**SVX02024BA**
1	25	38	6	**SVX02514BA**	6	**SVX02524BA**
	30	46		**SVX03014BA**		**SVX03024BA**
	40	61		**SVX04014BA**		**SVX04024BA**
2	50	72	7	**SVX05014AA**	7	**SVX05024AA**
	60	87		**SVX06014AA**		**SVX06024AA**
	75	105		**SVX07514AA**		**SVX07524AA**
3	100	140	8	**SVX10014AA**	8	**SVX10024AA**
4	125	170	8	**SVX12514AA**	8	**SVX12524AA**
	150	205		**SVX15014AA**		**SVX15024AA**
5	200	261	9	**SVX20014AA**	9	**SVX20024AA**
	250	300		**SVX25014AA**		**SVX25024AA**
6, 8 ③④	300	385	10	**SVX30014AA**	10	**SVX30064AA**
	350	460		**SVX35014AA**		**SVX35064AA**
	400	520		**SVX40014AA**		**SVX40064AA**
8, 9 ④⑤	500	590	11	**SVX50014AA**	11	**SVX50064AA**
	550	650		**SVX55014AA**		**SVX55064AA**
	600	730		**SVX60014AA**		**SVX60064AA**
⑥	650	820	12	**SVX65014AA**	12	**SVX65064AA**
	700	920		**SVX70014AA**		**SVX70064AA**
	800	1030		**SVX80014AA**		**SVX80064AA**

Notes

For brake chopper options, see **Page V6-T2-63**.

① See enclosure dimensions starting on **Page V6-T2-67**.

② Includes drive, local/remote keypad and enclosure.

③ The smaller enclosure Size 6 accommodates only power options, input disconnect (P1) and input line fuses (P3). Bypass and other options require Size 8. Adding any standard control option will not require the larger enclosure.

④ For other options, consult factory.

⑤ The smaller enclosure Size 8 accommodates only power options, input disconnect (P1) and input line fuses (P3). Bypass and other options require Size 9. Adding any standard control option will not require the larger enclosure.

⑥ Consult Eaton.

Options

9000X Series Option Board Kits

The 9000X Series drives can accommodate a wide selection of expander and adapter option boards to customize the drive for your application needs. The drive's control unit is designed to accept a total of five option boards.

The 9000X Series factory installed standard board configuration includes an A9 I/O board and an A2 relay output board, which are installed in slots A and B.

Option Boards

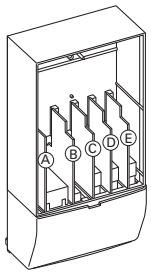

Option Board Kits

Option Kit Description ①	Allowed Slot Locations ②	Field Installed Catalog Number	Factory Installed Option Designator	SVX Ready Programs Basic	Local/ Remote	Standard	MSS	PID	Multi-P.	PFC
Standard I/O Cards										
2 RO (NC-NO)	B	**OPTA2**	—	■	■	■	■	■	■	■
6 DI, 1 DO, 2 AI, 1AO, 1 +10 Vdc ref, 2 ext +24 Vdc/EXT +24 Vdc	A	**OPTA9**	—	■	■	■	■	■	■	■
Extended I/O Cards										
2 RO, therm—SPX only	B	**OPTA3**	**A3**	—	■	■	■	■	■	■
Encoder low volt +5V/15V/24V—SPX only	C	**OPTA4**	**A4**	—	■	■	■	■	■	■
Encoder high volt +15V/24V—SPX only	C	**OPTA5**	**A5**	—	■	■	■	■	■	■
Double encoder—SPX only	C	**OPTA7**	**A7**	■	■	■	■	■	■	■
6 DI, 1 DO, 2 AI, 1 AO—SPX only	A	**OPTA8**	**A8**	—	■	■	■	■	■	■
3 DI (encoder 10–24V), out +15V/+24V, 2 DO (pulse+direction)—SPX only	C	**OPTAE**	**AE**	■	■	■	■	■	■	■
6 DI, 1 ext +24 Vdc/EXT +24 Vdc	B, C, **D**, E	**OPTB1**	**B1**	—	—	—	—	—	■	■
1 RO (NC-NO), 1 RO (NO), 1 therm	B, C, **D**, E	**OPTB2**	**B2**	—	—	—	—	—	■	■
1 AI (mA isolated), 2 AO (mA isolated), 1 ext +24 Vdc/EXT +24 Vdc	B, C, **D**, E	**OPTB4**	**B4**	■	■	■	■	■	■	■
3 RO (NO)	B, C, **D**, E	**OPTB5**	**B5**	—	—	—	—	—	■	■
1 ext +24 Vdc/EXT +24 Vdc, 3 Pt100	B, C, **D**, E	**OPTB8**	**B8**	—	—	—	—	—	—	—
1 RO (NO), 5 DI 42–240 Vac input	B, C, **D**, E	**OPTB9**	**B9**	—	—	—	—	—	■	■
Communication Cards ③										
Modbus	D, **E**	**OPTC2**	**C2**	■	■	■	■	■	■	■
Modbus TCP	D, **E**	**OPTCI**	**CI**	■	■	■	■	■	■	■
BACnet	D, **E**	**OPTCJ**	**CJ**	■	■	■	■	■	■	■
Ethernet IP	D, **E**	**OPTCK**	**CK**	■	■	■	■	■	■	■
Johnson Controls N2	D, **E**	**OPTC2**	**CA**	—	—	—	—	—	—	—
Profibus DP	D, **E**	**OPTC3**	**C3**	■	■	■	■	■	■	■
LonWorks	D, **E**	**OPTC4**	**C4**	■	■	■	■	■	■	■
Profibus DP (D9 connector)	D, **E**	**OPTC5**	**C5**	■	■	■	■	■	■	■
CanOpen (slave)	D, **E**	**OPTC6**	**C6**	■	■	■	■	■	■	■
DeviceNet	D, **E**	**OPTC7**	**C7**	■	■	■	■	■	■	■
Modbus (D9 type connector)	D, **E**	**OPTC8**	**C8**	■	■	■	■	■	■	■
Adapter—SPX only	D, **E**	**OPTD1**	**D1**	■	■	■	■	■	■	■
Adapter—SPX only	D, **E**	**OPTD2**	**D2**	■	■	■	■	■	■	■
RS-232 with D9 connection	D, **E**	**OPTD3**	**D3**	■	■	■	■	■	■	■
Keypad										
9000X Series local/remote keypad	—	**KEYPAD-LOC/REM**	—	—	—	—	—	—	—	—
9000X Series remote mount keypad kit (keypad not included)	—	**OPTRMT-KIT-9000X**	—	—	—	—	—	—	—	—
9000X Series RS-232 cable, 13 ft	—	**PP00104**	—	—	—	—	—	—	—	—

Notes

① AI = Analog Input; AO = Analog Output, DI = Digital Input, DO = Digital Output, RO = Relay Output
② Option card must be installed in one of the slots listed for that card. Slot indicated in bold is the preferred location.
③ OPTC2 is a multi-protocol option card.

Modbus RTU Network Communications

The Modbus Network Card OPTC2 is used for connecting the 9000X Drive as a slave on a Modbus network. The interface is connected by a 9-pin DSUB connector (female) and the baud rate ranges from 300 to 19200 baud. Other communication parameters include an address range from 1 to 247; a parity of None, Odd or Even; and the stop bit is 1.

Profibus Network Communications

The Profibus Network Card OPTC3 is used for connecting the 9000X Drive as a slave on a Profibus-DP network. The interface is connected by a 9-pin DSUB connector (female). The baud rates range from 9.6K baud to 12M baud, and the addresses range from 1 to 127.

LonWorks Network Communications

The LonWorks Network Card OPTC4 is used for connecting the 9000X Drive on a LonWorks network. This interface uses Standard Network Variable Types (SNVT) as data types. The channel connection is achieved using a FTT-10A Free Topology transceiver via a single twisted transfer cable. The communication speed with LonWorks is 78 kBits/s.

CanOpen (Slave) Communications

The CanOpen (Slave) Network Card OPTC6 is used for connecting the 9000X Drive to a host system. According to ISO11898 standard cables to be chosen for CAN bus should have a nominal impedance of 120 ohms, and specific line delay of nominal 5 nS/m. 120 ohms line termination resistors required for installation.

DeviceNet Network Communications

The DeviceNet Network Card OPTC7 is used for connecting the 9000X Drive on a DeviceNet Network. It includes a 5.08 mm pluggable connector. Transfer method is via CAN using a two-wire twisted shielded cable with two-wire bus power cable and drain. The baud rates used for communication include 125K baud, 250K baud and 500K baud.

Johnson Controls Metasys N2 Network Communications

The OPTC2 fieldbus board provides communication between the 9000X Drive and a Johnson Controls Metasys™ N2 network. With this connection, the drive can be controlled, monitored and programmed from the Metasys system. The N2 fieldbus is available as a factory installed option and as a field installable kit.

Modbus/TCP Network Communications

The Modbus/TCP Network Card OPTCI is used for connecting the 9000X Drive to Ethernet networks utilizing Modbus protocol. It includes an RJ-45 pluggable connector. This interface provides a selection of standard and custom register values to communicate drive parameters. The board supports 10 Mbps and 100 Mbps communication speeds. The IP address of the board is configurable over Ethernet using a supplied software tool.

BACnet Network Communications

The BACnet Network Card OPTCJ is used for connecting the 9000X Drive to BACnet networks. It includes a 5.08 mm pluggable connector. Data transfer is Master-Slave/Token Passing (MS/TP) RS-485. This interface uses a collection of 30 Binary Value Objects (BVOs) and 35 Analog Value Objects (AVOs) to communicate drive parameters. The card supports 9.6, 19.2 and 38.4 Kbaud communication speeds and supports network addresses 1–127.

Ethernet/IP Network Communications

The Ethernet/IP Network Card OPTCK is used for connecting the 9000X Drive to Ethernet/Industrial Protocol networks. It includes an RJ-45 pluggable connector. The interface uses CIP objects to communicate drive parameters (CIP is "Common Industrial Protocol", the same protocol used by DeviceNet). The board supports 10 Mbps and 100 Mbps communication speeds. The IP address of the board is configurable by Static, BOOTP and DHCP methods.

SVX Conversion Kit

Frame 4–7 ①

Frame Size	Enclosure Size	Delivery Code	Catalog Number
FR4	0	FB10	**OPTCON-SVXFR4-SZ00**
	1		**OPTCON-SVXFR4-SZ01**
FR5	0	FB10	**OPTCON-SVXFR5-SZ00**
	1		**OPTCON-SVXFR5-SZ01**
FR6	1	FB10	**OPTCON-SVXFR6-SZ01**
	2		**OPTCON-SVXFR6-SZ02**
FR7	2	FB10	**OPTCON-SVXFR7-SZ02**

Note

① The kit consists of a flange kit, adapter plate(s), hardware, remote keypad kit and SVX9000 decal.

Control/Communication Option Descriptions

For availability, see Product Selection for base drive voltage required.

Available Control/Communications Options

Option	Description	Option Type
K1	**Door-Mounted Speed Potentiometer**—Provides the SVX9000 with the ability to adjust the frequency reference using a door-mounted potentiometer. This option uses the 10 Vdc reference to generate a 0–10V signal at the analog voltage input signal terminal. When the HOA bypass option is added, the speed is controlled when the HOA switch is in the HAND position. Without the HOA bypass option, a two-position switch (labeled local/remote) is provided on the keypad to select speed reference from the speed potentiometer or a remote speed signal.	Control
K2	**Door-Mounted Speed Potentiometer with HOA Selector Switch—**Provides the SVX9000 with the ability to start/stop and adjust the speed reference from door-mounted control devices or remotely from customer supplied inputs. In HAND position, the drive will start and the speed is controlled by the door-mounted speed potentiometer. The drive will be disabled in the OFF position. When AUTO is selected, the drive run and speed control commands are via user-supplied dry contact and 4–20 mA signal.	Control
K3	**3–15 PSIG Follower**—Provides a pneumatic transducer which converts a 3–15 psig pneumatic signal to either 0–8 Vdc or a 1–9 Vdc signal interface with the SVX9000. The circuit board is mounted on the inside of the front enclosure panel and connects to the user's pneumatic control system via 6 ft (1.8m) of flexible tubing and a 1/4 in (6.4 mm) brass tube union.	Control
K4	**HAND/OFF/AUTO Switch for Non-Bypass Configurations**—Provides a three-position selector switch that allows the user to select either a HAND or AUTO mode of operation. HAND mode is defaulted to k (keypad operation, and AUTO mode is defaulted to control from an external terminal source. These modes of operation can be configured via programming to allow for alternate combinations of start and speed sources. Start and speed sources include keypad, I/O and fieldbus.	Control
K5	**MANUAL/AUTO Speed Reference Switch**—Provides a door-mounted selector switch for MANUAL/AUTO speed reference.	Control
K6	**START/STOP Pushbuttons**—Provide door-mounted START and STOP pushbuttons for either bypass or non-bypass configurations.	Control
KB	**115V Control Transformer, 550 VA**—Provides a fused control power transformer with additional 550 VA at 115V for customer use.	Control
KF	**Bypass Test Switch for RB and RA**—Allows the user to energize the AF drive for testing while operating the motor on the bypass controller. The test switch is mounted on the inside of the enclosure door.	Addl. bypass
KO	**Standard Elapsed Time Meter**—Provides a door-mounted elapsed run time meter.	Control
L1	**Power On and Fault Pilot Lights**—Provide a white power on light that indicates power to the enclosed cabinet and a red fault light that indicates a drive fault has occurred.	Light
L2	**Bypass Pilot Lights for RB, RA Bypass Options**—A green light indicates when the motor is running in inverter mode and an amber light that indicates when the motor is running in bypass mode. The lights are mounted on the enclosure door, above the switches.	Addl. bypass
LA	**Green RUN Light (22 mm)**—Provides a green run light that indicates the drive is running.	Light
LD	**Green STOP Light (22 mm)**—Provides a green light that indicates the drive is stopped.	Light
LE	**Red RUN Pilot Light (22 mm)**—Provides a red run pilot light that indicates the drive is running.	Light
LF	**Red STOP Light (22 mm)**—Provides a red stop light that indicates the drive is stopped.	Light
LJ	**White Power On Light (22 mm)**—The 22 mm white light that illuminates when the drive assembly is powered.	Light
LU	**Misc. Light (22 mm)**—Provides a misc. "user defined" pilot light. User to define light function and color.	Light
P1	**Input Disconnect Assembly Rated to 100 kAIC**—High Interrupting Motor Circuit Protector (HMCP) that provides a means of short circuit protection for the power cables between it and the SVX9000, and protection from high-level ground faults on the power cable. Allows a convenient means of disconnecting the SVX9000 from the line and the operating mechanism can be padlocked in the OFF position. This is factory mounted in the enclosure.	Input
P2	**Disconnect Switch**—Disconnect switch option is applicable only with NEMA Type 1/IP21 and NEMA Type 12/IP54 freestanding drives. Allows a convenient means of disconnecting the SVX9000 from the line, and the operating mechanism can be padlocked in the OFF position. This is factory-mounted in the enclosure.	Input
P3	**Input Line Fuses Rated to 200 kAIC**—Provides high-level fault protection of the SVX9000 input power circuit from the load side of the fuses to the input side of the power transistors. This option consists of three 200 kA fuses, which are factory mounted in the enclosure.	Input
P7	**MOV Surge Suppressor**—Provides a Metal Oxide Varistor (MOV) connected to the line side terminals and is designed to clip line side transients.	Input
PE	**Output Contactor**—Provides a means for positive disconnection of the drive output from the motor terminals. The contactor coil is controlled by the drive's run or permissive logic. NC and NO auxiliary contacts rated at 10A, 600 Vac are provided for customer use. Bypass options **RB** and **RA** include an output contactor as standard. This option includes a low VA 115 Vac fused control power transformer and is factory mounted in the enclosure.	Output
PF	**Output Filter**—Used to reduce the transient voltage (DV/DT) at the motor terminals. The output filter is recommended for cable lengths exceeding 100 ft (30m) with a drive of 3 hp and above, for cable lengths of 33 ft (10m) with a drive of 2 hp and below, or for a drive rated at 525–690V. This option is mounted in the enclosure, and may be used in conjunction with a brake chopper circuit.	Output
PG	**MotoRx (300–600 ft) 1000 V/µS DV/DT Filter**—Used to reduce transient voltage (DV/DT) and peak voltages at the motor terminals. This option is comprised of a 0.5% line reactor, followed by capacitive filtering and an energy recovery/clamping circuit. Unlike the output filter (See option **PF**), the MotoRx recovers most of the energy from the voltage peaks, resulting in a lower voltage drop to the motor, and therefore conserving power. This option is used when the distance between a single motor and the drive is 300–600 ft (91–183m). *This option can not be used with the brake chopper circuit. The output filter (option **PF**) should be investigated as an alternative.*	Output
PH	**Single Overload Relay**—Uses a bimetallic overload relay to provide additional overload current protection to the motor on configurations without bypass options. It is included with the bypass configurations for overload current protection in the bypass mode. The overload relay is mounted within the enclosure, and is manually resettable. Heater pack included.	Output

For availability, see Product Selection for base drive voltage required.

Available Control/Communications Options, continued

Option	Description	Option Type
PI	**Dual Overload Relays**—This option is recommended when a single drive is operating two motors and overload current protection is needed for each of the motors. The standard configuration includes two bimetallic overload relays, each sized to protect a motor with 50% of the drive hp rating. For example, a 100 hp drive would include two overload relays sized to protect two 50 hp motors. The relays are mounted within the enclosure, and are manually resettable. Heater packs not included.	Output
PN	**Dual Overloads for Bypass**—This option is recommended when a single drive is operating two motors in the bypass mode and overload current protection is needed for each of the motors. The standard configuration includes two bimetallic overload relays, each sized to protect a motor with 50% of the drive hp rating. For example, a 100 hp drive would include two overload relays sized to protect two 50 hp motors. The relays are mounted within the enclosure, and are manually resettable.	Addl. bypass
RA	**Manual HOA Bypass Controller**—The manual HAND/OFF/AUTO (HOA)—3-contactor—bypass option provides a means of bypassing the SVX9000, allowing the AC motor to be operated at full speed directly from the AC supply line. This option consists of an input disconnect, a fused control power transformer, and a full voltage bypass starter with a door mounted HOA selector switch and an INVERTER/BYPASS switch. The HOA switch provides the ability to start and stop the drive in the inverter mode. For applications up to 100 hp, a Freedom Series IEC input contactor, a Freedom Series IEC output contactor, and a Freedom Series IEC starter with a bimetallic overload relay is included. For applications above 100 hp, an Advantage input contactor, an Advantage output contactor and an Advantage starter with electronic overload protection is included. The contactors are mechanically and electrically interlocked (see power diagram on **Page V6-T2-66**).	Bypass
RB	**Manual IOB Bypass Controller**—The manual INVERTER/OFF/BYPASS (IOB)—3-contactor—bypass option provides a means of bypassing the SVX9000, allowing the AC motor to be operated at full speed directly from the AC supply line. This option consists of an input disconnect, a fused control power transformer, and a full voltage bypass starter with a door mounted IOB selector switch. For applications up to 100 hp, a Freedom Series IEC input contactor, a Freedom Series IEC output contactor, and a Freedom Series IEC starter with a bimetallic overload relay is included. For applications above 100 hp, an Advantage input contactor, an Advantage output contactor and an Advantage starter with electronic overload protection is included. The contactors are mechanically and electrically interlocked (see power diagram on **Page V6-T2-66**).	Bypass
RC	**Auto Transfer HOA Bypass Controller**—The manual HAND/OFF/AUTO (HOA)—3-contactor—bypass option provides a means of bypassing the SVX9000, allowing the AC motor to be operated at full speed directly from the AC supply line. The circuitry provides an automatic transfer of the load to "across the line" operation after a drive trip. This option consists of an input disconnect, a fused control power transformer, and a full voltage bypass starter with a door mounted HOA selector switch and an INVERTER/BYPASS switch. The HOA switch provides the ability to start and stop the drive in either mode. For applications up to 100 hp, a Freedom Series IEC input contactor, a Freedom Series IEC output contactor, and a Freedom Series IEC starter with a bimetallic overload relay is included. For applications above 100 hp, an Advantage input contactor, an Advantage output contactor and an Advantage starter with electronic overload protection is included. The contactors are mechanically and electrically interlocked (see power diagram on **Page V6-T2-66**). Door-mounted pilot lights are provided which indicate bypass or inverter operation. A green light indicates when the motor is running in inverter mode and an amber light indicates when the motor is running in bypass mode. **WARNING**: The motor may restart when the overcurrent relay is reset when operating in bypass, unless the IOB selector switch is turned to the OFF position.	Bypass
RD	**Auto Transfer IOB Bypass Controller**—The auto INVERTER/OFF/BYPASS (IOB)—3-contactor—bypass option provides a means of bypassing the SVX9000, allowing the AC motor to be operated at full speed directly from the AC supply line. The circuitry provides an automatic transfer of the load to "across the line" operation after a drive trip. This option consists of an input disconnect, a fused control power transformer, and a full voltage bypass starter with a door mounted IOB selector switch. For applications up to 100 hp, a Freedom Series IEC input contactor, a Freedom Series IEC output contactor, and a Freedom Series IEC starter with a bimetallic overload relay is included. For applications above 100 hp, an Advantage input contactor, an Advantage output contactor and an Advantage starter with electronic overload protection is included. The contactors are mechanically and electrically interlocked (see power diagram on **Page V6-T2-66**). Door-mounted pilot lights are provided which indicate bypass or inverter operation. A green light indicates when the motor is running in inverter mode and an amber light indicates when the motor is running in bypass mode. **WARNING**: The motor may restart when the overcurrent relay is reset when operating in bypass, unless the IOB selector switch is turned to the OFF position.	Bypass
S5	**Floor Stand 22 in**—Converts a Size 1 or 2, normally wall mounted enclosure to a floor standing enclosure with a height of 22 in (558.8 mm).	Enclosure
S6	**Floor Stand 12 in**—Converts a Size 2, normally wall mounted enclosure to a floor standing enclosure with a height of 12 in (304.8 mm).	Enclosure
S7	**10 in Expansion**—In a Size 5 enclosure, the extension allows for bottom cable entry and additional space for customer mounted components. **NOTE:** Enclosure expansion rated NEMA Type 1/IP21 only.	Enclosure
S8	**20 in Expansion**—In a Size 5 enclosure, the extension allows for bottom cable entry and additional space for customer mounted components. When the output filter (option **PF**) is selected for a drive using a Size 5 enclosure, this expansion box is required and included in the option pricing. Enclosure expansion rated NEMA Type 1/IP21 only.	Enclosure
S9	**Space Heater**—Prevents condensation from forming in the enclosure when the drive is inactive or in storage. Includes a thermostat for variable temperature control. A 200W heater is installed in enclosures 0 and 1, and a 400W heater is installed in enclosures 2–5. Requires a customer supplied 115V remote supply source.	Enclosure

Enclosed Drive Options

Brake Chopper Options

The brake chopper circuit option is used for applications that require dynamic braking. Dynamic braking resistors are not included with drive purchase. Consult the factory for dynamic braking resistors which are supplied separately. Resistors are not UL Listed.

For brake chopper circuit selection and adder—NEMA Type 1/IP21, NEMA Type 12/IP54, consult the factory.

Conformal (Varnished) Coating ②

Chassis Frame	Delivery Code
FR4	FP
FR5	FP
FR6	FP
FR7	FP
FR8	FP
FR9	FP
FR10	FP
FR11	FP
FR12	FP
FR13	FP
FR14	FP

208V and 230V Control Options—3/4–100 hp ③

Description	Catalog Number Suffix
Door-mounted speed potentiometer	**K1**
Door-mounted speed potentiometer with HOA selector switch	**K2**
3–15 psig follower	**K3**
HAND/OFF/AUTO switch (22 mm)	**K4**
MANUAL/AUTO ref switch (22 mm)	**K5**
START/STOP pushbuttons (22 mm)	**K6**
115 Volt control transformer 550 VA	**KB**
Standard elapsed time meter	**KO**

480V Control Options—1–800 hp ③

Description	Catalog Number Suffix
Door-mounted speed potentiometer	**K1**
Door-mounted speed potentiometer with HOA selector switch	**K2**
3–15 psig follower	**K3**
HAND/OFF/AUTO switch (22 mm)	**K4**
MANUAL/AUTO ref switch (22 mm)	**K5**
START/STOP pushbuttons (22 mm)	**K6**
115 Volt control transformer 550 VA	**KB**
Standard elapsed time meter	**KO**

208V and 230V Light Options—3/4–100 hp ③

Description	Catalog Number Suffix
Power on/fault pilot lights (22 mm)	**L1**
Green RUN light (22 mm)	**LA**
Green STOP light (22 mm)	**LD**
Red RUN light (22 mm)	**LE**
Red STOP light (22 mm)	**LF**
Power on light (22 mm)	**LJ**
Misc. light (22 mm)	**LU**

480V Light Options—1–800 hp ③

Description	Catalog Number Suffix
Power on/fault pilot lights (22 mm)	**L1**
Green RUN light (22 mm)	**LA**
Green STOP light (22 mm)	**LD**
Red RUN light (22 mm)	**LE**
Red STOP light (22 mm)	**LF**
Power on light (22 mm)	**LJ**
Misc. light (22 mm)	**LU**

Notes

① External dynamic braking resistors not included. Consult factory.
② See Product Selection on **Pages V6-T2-55** to **V6-T2-58**, 208V, 230V and 480V. Consult the factory for adder.
③ Consult factory for adder information.

208V and 230V Bypass Options, 3/4–100 hp ①②

Description	Catalog Number Suffix
Bypass test switch for RA, RB (and RC, RD—230V)	**KF**
Bypass pilot lights for RA, RB options	**L2**
Dual overloads for bypass	**PN**
Manual HOA bypass controller	**RA**
Manual IOB bypass controller	**RB**
Auto transfer HOA bypass controller	**RC**
Auto transfer IOB bypass controller	**RD**

480V Bypass Options, 1–800 hp ①②

Description	Catalog Number Suffix
Bypass test switch for RA, RB, RC, RD	**KF**
Bypass pilot lights for RA, RB options	**L2**
Dual overloads for bypass	**PN**
Manual HOA bypass controller	**RA**
Manual IOB bypass controller	**RB**
Auto transfer HOA bypass controller	**RC**
Auto transfer IOB bypass controller	**RD**

208V and 230V Enclosure Options, Sizes 0–5 ②

Description	Catalog Number Suffix
Floor stand 22 in (558.8 mm)	**S5**
Floor stand 12 in (304.8 mm)	**S6**
10 in (254 mm) expansion ③	**S7**
20 in (508 mm) expansion	**S8**
Space heater ④	**S9**

480V Enclosure Options, Sizes 0–9 ②

Description	Catalog Number Suffix
Floor stand 22 in (558.8 mm)	**S5**
Floor stand 12 in (304.8 mm)	**S6**
10 in (254 mm) expansion ③	**S7**
20 in (508 mm) expansion	**S8**
Space heater ④	**S9**

208V and 230V Power Options, 3/4–100 hp ②

Description	Catalog Number Suffix
Input	
Input disconnect (HMCP) 100 kAIC	**P1**
Input line fuses 200 kAIC	**P3**
Input power surge protection	**P7**
Output	
Output contactor	**PE**
Output filter ⑤⑥	**PF**
MotoRx (300–600 ft) 1000 V/µs DV/DT filter ⑥	**PG**
Single overload relay ⑦	**PH**
Dual overload relays ⑦	**PI**

480V Power Options, 1–800 hp ②

Description	Catalog Number Suffix
Input	
Input disconnect (HMCP) 100 kAIC	**P1**
Input line fuses 200 kAIC	**P3**
Input power surge protection	**P7**
Output	
Output contactor	**PE**
Output filter ⑤⑥	**PF**
MotoRx (300–600 ft) 1000 V/µs DV/DT filter ⑥	**PG**
Single overload relay ⑦	**PH**
Dual overload relays ⑦	**PI**

Input Options, 250–550 hp ②

Description	Catalog Number Suffix
480V Only	
Load switch	**P2** ⑧

Notes

① See **Page V6-T2-62** for details.
② Consult factory for adder information.
③ See **Page V6-T2-67** for dimensions.
④ Requires customer supplied 115 Vac supply.
⑤ Not required for 208V and 230V applications.
⑥ Output filter may be required whenever the distance from the drive to the motor exceeds 100 ft (30m). Refer to **Page V6-T2-61**, option **PF** for further details.".
⑦ Heater packs not included.
⑧ Applicable with FR10 and FR11 freestanding designs only.

Technical Data and Specifications

9000X Enclosed Drives

Description	NEMA Type 1/IP21 or NEMA Type 12/IP54 Specification
Primary Design Features	
45–66 Hz input frequency	Standard
Output: AC volts maximum	Input voltage base
Output frequency range	0–320 Hz
Initial output current (I_H)	250% for 2 seconds
Overload (1 minute [I_H/I_L])	150%/110%
Enclosure space heater	Optional
Oversize enclosure	Standard
Output contactor	Optional
Bypass motor starter	Optional
Listings	UL, cUL
Protection Features	
Incoming line fuses	Optional
AC input circuit disconnect	Optional
Line reactors	Standard
Phase rotation insensitive	Standard
EMI filter	Standard
Input phase loss protection	Standard
Input overvoltage protection	Standard
Line surge protection	Standard
Output short circuit protection	Standard
Output ground fault protection	Standard
Output phase protection	Standard
Overtemperature protection	Standard
DC overvoltage protection	Standard
Drive overload protection	Standard
Motor overload protection	Standard
Programmer software	Optional
Local/remote keypad	Standard
Keypad lockout	Standard
Fault alarm output	Standard
Built-in diagnostics	Standard

Description	NEMA Type 1/IP21 or NEMA Type 12/IP54 Specification
Input/Output Interface Features	
Setup adjustment provisions	
Remote keypad/display	Standard
Personal computer	Standard
Operator control provisions	
Drive mounted keypad/display	Standard
Remote keypad/display	Standard
Conventional control elements	Standard
Serial communications	Optional
115 Vac control circuit	Optional
Speed setting inputs	
Keypad	Standard
0–10 Vdc potentiometer/voltage signal	Standard
4–20 mA Isolated	Configurable
4–20 mA Differential	Configurable
3–15 psig	Optional
Analog outputs	
Speed/frequency	Standard
Torque/load/current	Programmable
Motor voltage	Programmable
Kilowatts	Programmable
0–10 Vdc signals	Configurable w/jumpers
4–20 mA DC signals	Standard
Isolated signals	Optional
Discrete outputs	
Fault alarm	Standard
Drive running	Standard
Drive at set speed	Programmable
Optional parameters	14
Dry contacts	1 (2 relays Form C)
Open collector outputs	1
Additional discrete outputs	Optional
Communications	
RS-232	Standard
RS-422/485	Optional
DeviceNet™	Optional
Modbus RTU	Optional
CanOpen (slave)	Optional
Profibus-DP	Optional
Lonworks®	Optional
Johnson Controls Metasys™ N2	Optional

9000X Enclosed Drives, continued

Description	NEMA Type 1/IP21 or NEMA Type 12/IP54 Specification
Performance Features	
Sensorless vector control	Standard
Volts/hertz control	Standard
IR and slip compensation	Standard
Electronic reversing	Standard
Dynamic braking	Optional ①
DC braking	Standard
PID setpoint controller	Programmable
Critical speed lockout	Standard
Current (torque) limit	Standard
Adjustable acceleration/deceleration	Standard
Linear or S curve accel/decel	Standard
Jog at preset speed	Standard
Thread/preset speeds	7
Automatic restart	Selectable
Coasting motor start	Standard
Coast or ramp stop selection	Standard
Elapsed time meter	Optional
Carrier frequency adjustment	1–16 kHz
Standard Conditions for Application and Service	
Operating ambient temperature	0 to 40°C
Storage temperature	–40 to 60°C
Humidity (maximum), non-condensing	95%
Altitude (maximum without derate)	3300 ft (1000m)
Line voltage variation	+10/–15%
Line frequency variation	45–66 Hz
Efficiency	>96%
Power factor (displacement)	>0.94

Standard I/O Specifications

Description	Specification
Six–digital input programmable	24V: "0" ≤10V, "1" ≥18V,R_i >5 kohms
Two–analog input configurable w/jumpers	Voltage: 0–±10V, R_i >200 kohms Current: 0 (4)–20 mA, R_i = 250 ohms
Two–digital output programmable	Form C relays 250 Vac 30 Vdc 2 amp resistive
One–analog output programmable configurable w/jumper	0–20 mA, R_L max. 500 ohms 10 bits ±2%
One digital output programmable	Open collector 48 Vdc 50 mA

I/O Specifications for Control/Communication Options

Description	Specification
Analog voltage, input	0–±10V, R_i ≥200 kohms
Analog current, input	0 (4)–20 mA, R_i = 250 ohms
Digital input	24V: "0" ≤10V, "1" ≥18V, R_i >5 kohms
Auxiliary voltage	24V (±20%), max. 50 mA
Reference voltage	10V ±3%, max. 10 mA
Analog current, output	0 (4)–20 mA, R_L = 500 kohms resolution 10 bit, accuracy ≤±2%
Analog voltage, output	0 (2)–10V, R_L ≥1 kohms, resolution 10 bit, accuracy ≤±2%
Relay output	
Maximum switching voltage	300 Vdc, 250 Vac
Maximum switching load	8A/24 Vdc, 0.4A/300 Vdc, 2 kVA/250 Vac
Maximum continuous load	2A rms
Thermistor input	R_{trip} = 4.7 kohms
Encoder input	24V: "0" ≤10V, "1" ≥18V, R_i = 2.2 kohms 5V: "0" ≤2V, "1" ≥3V, R_i = 330 ohms

Wiring Diagram

Power Diagram for Bypass Options RB and RA

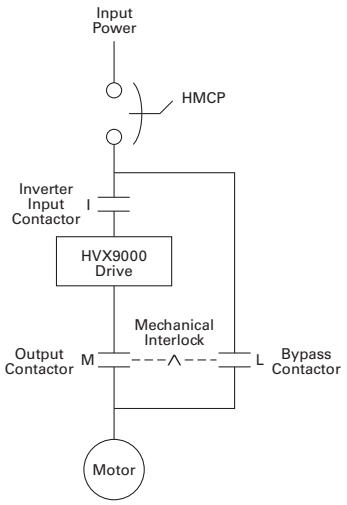

Note

① Some horsepower units include dynamic braking chopper as standard—refer to individual drive sections.

Dimensions

Approximate Dimensions in Inches (mm)

9000X Enclosed Drives

Size 0

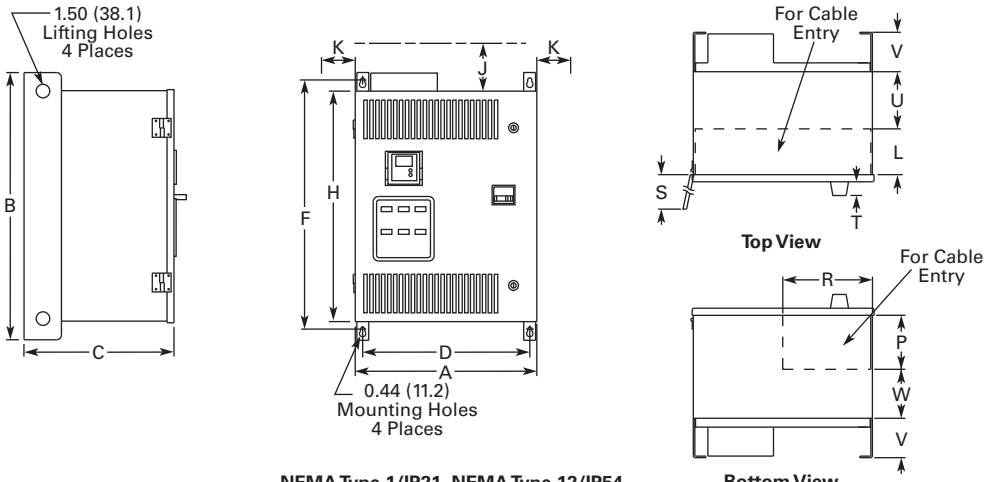

NEMA Type 1/IP21, NEMA Type 12/IP54
NEMA Type 12/IP54 Includes Cover Plates Over Louvers

For reference only, dimensions are subject to change.

Wide A	High B	Deep C	Mounting D	D1	E	E1	F	G	G1	Door Height H	Min. Air Space J	K
19.9 (504)	29.0 (737)	16.4 (416)	18.3 (465)	—	—	—	27.4 (695)	—	—	25.4 (644)	4.0 (102)	3.0 (76)

Cable Entry L	M	N	P	R	Door Clearance S	CB Handle T	U	V	W	Max. Approx. Shipping Weight Lbs (kg)
5.0 (127)	—	—	6.0 (152)	9.6 (245)	26.4 (669)	1.5 (38)	6.3 (160)	4.3 (108)	5.3 (134)	200 (91)

Approximate Dimensions in Inches (mm)

Size 1

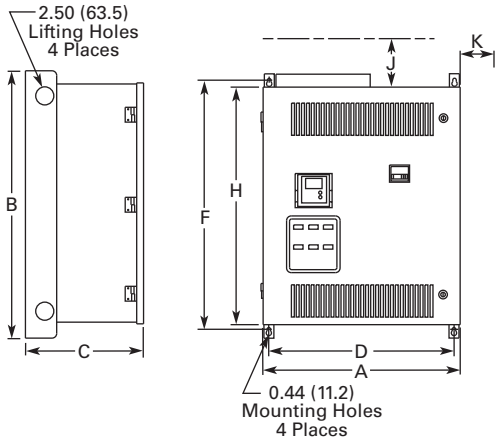

NEMA Type 1/IP21, NEMA Type 12/IP54
NEMA Type 12/IP54 Includes Cover Plates Over Louvers

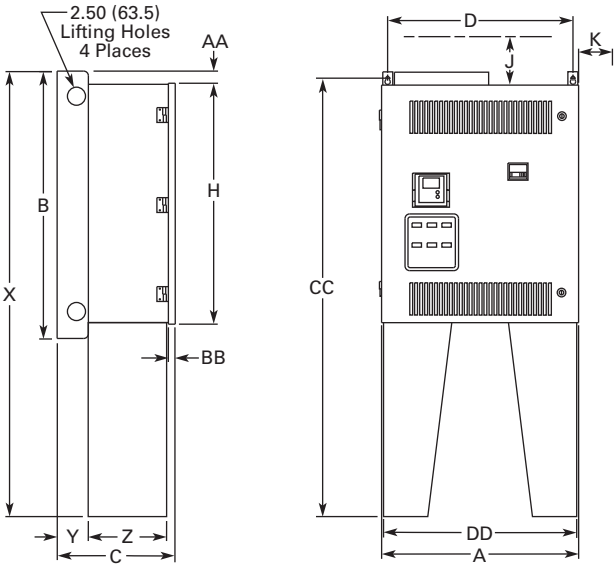

NEMA Type 1/IP21, NEMA Type 12/IP54
with Floor Stand

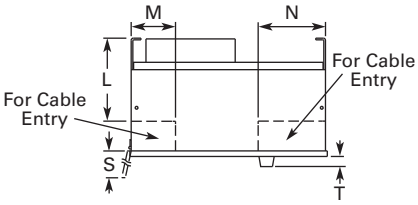

Top View

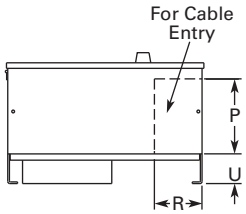

Bottom View

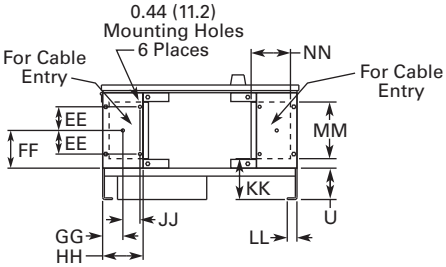

Bottom View
NEMA Type 1/IP21, NEMA Type 12/IP54
with Floor Stand

For reference only, dimensions are subject to change.

Wide A	High B	Deep C	Mounting D	D1	E	E1	F	G	G1	Door Height H	Min. Air Space J	K
26.4 (669)	36 (914)	16.3 (414)	24.8 (630)	—	—	—	34.0 (864)	—	—	32.4 (822)	4.0 (102)	3.0 (76)

Cable Entry L	M	N	P	R	Door Clearance S	CB Handle T	U	V	W	Max. Approx. Shipping Weight Lbs (kg)
11.0 (279)	6.0 (152)	9.0 (229)	10.0 (254)	6.5 (165)	26.4 (669)	1.5 (38)	4.3 (108)	—	—	230 (104)

Floor Stand X	Y	Z	AA	BB	CC	DD	EE	FF	GG	HH	JJ	KK	LL	MM	NN	PP	RR	SS	TT	UU	VV
56.0 (1422)	4.3 (108)	11.1 (281)	1.8 (46)	0.8 (19)	55.2 (1402)	26.0 (660)	3.5 (90)	5.5 (141)	3.0 (76)	6.0 (152)	2.0 (51)	5.4 (136)	1.1 (28)	8.8 (224)	5.4 (137)	—	—	—	—	—	—

Approximate Dimensions in Inches (mm)

Size 2

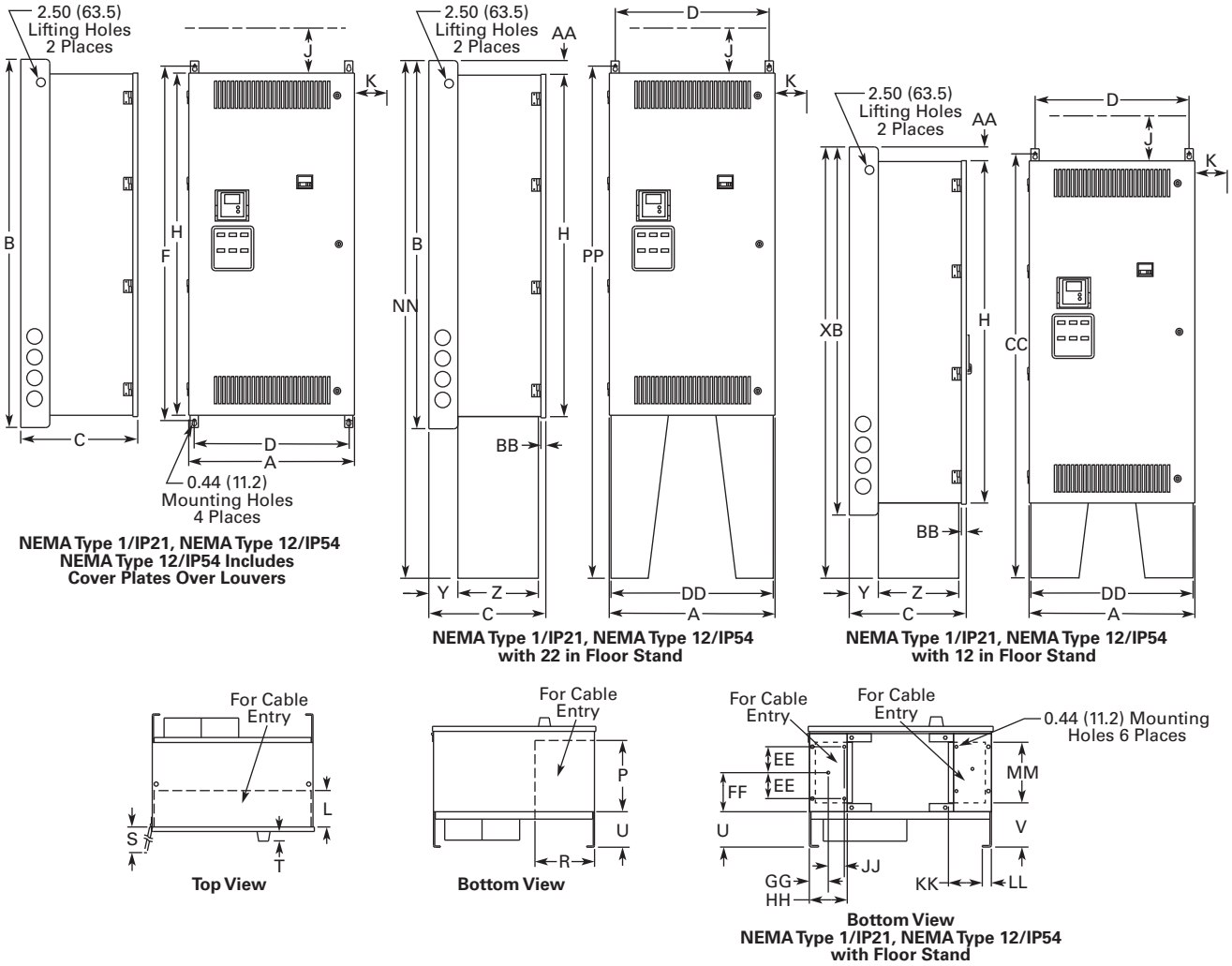

For reference only, dimensions are subject to change.

Wide A	High B	Deep C	Mounting D	D1	E	E1	F	G	G1	Door Height H	Min. Air Space J	K
26.4 (669)	59.0 (1499)	19.4 (492)	24.8 (630)	—	—	—	57.0 (1448)	—	—	55.4 (1406)	4.0 (102)	3.0 (76)

Cable Entry L	M	N	P	R	Door Clearance S	CB Handle T	U	V	W	Max. Approx. Shipping Weight Lbs (kg)
5.9 (149)	—	—	12.4 (315)	9.5 (241)	26.4 (669)	1.5 (38)	4.8 (121)	5.9 (151)	—	380 (173)

Floor Stand X	Y	Z	AA	BB	CC	DD	EE	FF	GG	HH	JJ	KK	LL	MM	NN	PP	RR	SS	TT	UU	VV
69.0 (1753)	4.8 (121)	13.6 (344)	1.8 (46)	0.8 (19)	68.2 (1732)	26.0 (660)	4.8 (121)	6.8 (172)	3.0 (76)	6.0 (152)	2.0 (51)	5.0 (127)	1.1 (28)	11.3 (288)	79.0 (2007)	78.2 (1986)	—	—	—	—	—

Approximate Dimensions in Inches (mm)

Size 3

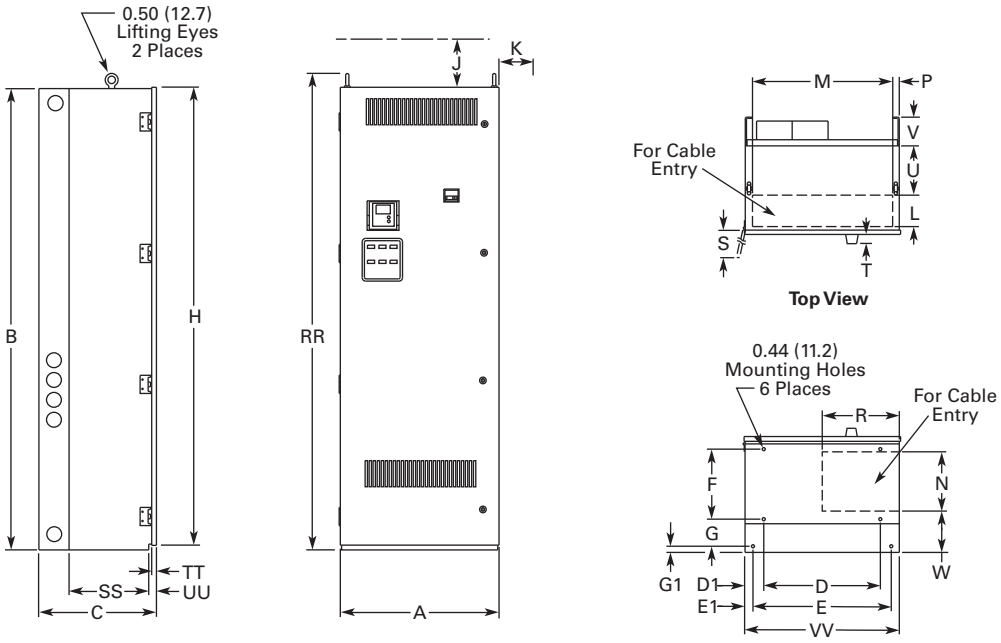

NEMA Type 1/IP21, NEMA Type 12/IP54
NEMA Type 12/IP54 Includes Cover Plates Over Louvers

For reference only, dimensions are subject to change.

Wide	High	Deep	Mounting							Door Height	Min. Air Space	
A	B	C	D	D1	E	E1	F	G	G1	H	J	K
26.4 (671)	77.0 (1956)	19.4 (493)	19.5 (495)	3.3 (83)	23.0 (584)	1.5 (38)	11.7 (298)	5.5 (140)	0.9 (24)	76.4 (1939)	4.0 (102)	3.0 (76)

Cable Entry					Door Clearance	CB Handle									Max. Approx. Shipping Weight
L	M	N	P	R	S	T	U	V	W	RR	SS	TT	UU	VV	Lbs (kg)
5.3 (133)	23.4 (594)	10.0 (254)	1.3 (32)	12.9 (328)	26.4 (669)	1.5 (38)	8.0 (203)	4.8 (121)	6.8 (173)	79.5 (2018)	13.40 (340)	0.8 (19)	1.3 (32)	26.0 (660)	690 (313)

Approximate Dimensions in Inches (mm)

Size 4

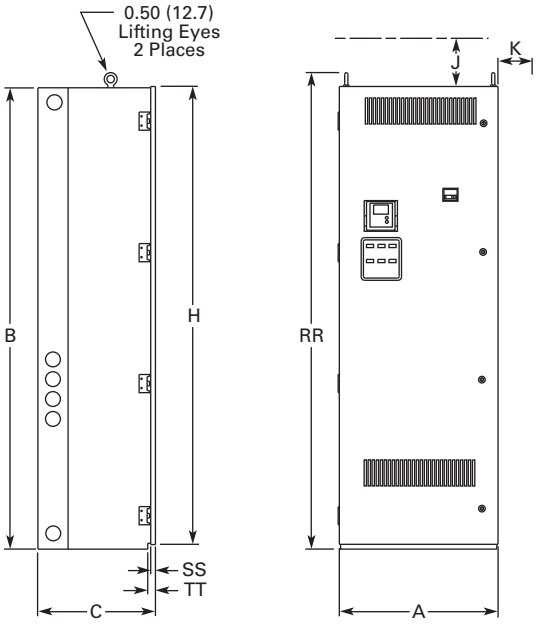

NEMA Type 1/IP21, NEMA Type 12/IP54
NEMA Type 12/IP54 Includes Cover Plates Over Louvers

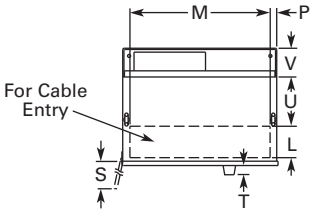

Top View

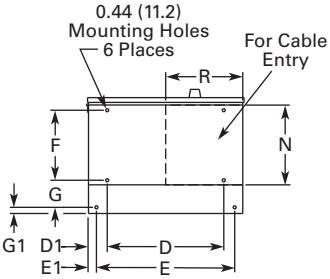

Bottom View

For reference only, dimensions are subject to change.

Wide A	High B	Deep C	Mounting D	D1	E	E1	F	G	G1	Door Height H	Min. Air Space J	K
26.4 (671)	90.0 (2286)	19.4 (493)	19.5 (495)	3.3 (83)	23.0 (584)	1.5 (38)	11.7 (298)	5.5 (140)	0.9 (24)	89.4 (2270)	4.0 (102)	3.0 (76)

Cable Entry L	M	N	P	R	Door Clearance S	CB Handle T	U	V	W	RR	SS	TT	UU	VV	Max. Approx. Shipping Weight Lbs (kg)
5.3 (133)	23.4 (594)	13.8 (351)	1.0 (25)	11.2 (286)	26.4 (669)	1.5 (38)	8.0 (204)	4.8 (121)	—	92.5 (2349)	0.8 (19)	1.3 (32)	—	—	825 (375)

Approximate Dimensions in Inches (mm)

Size 5

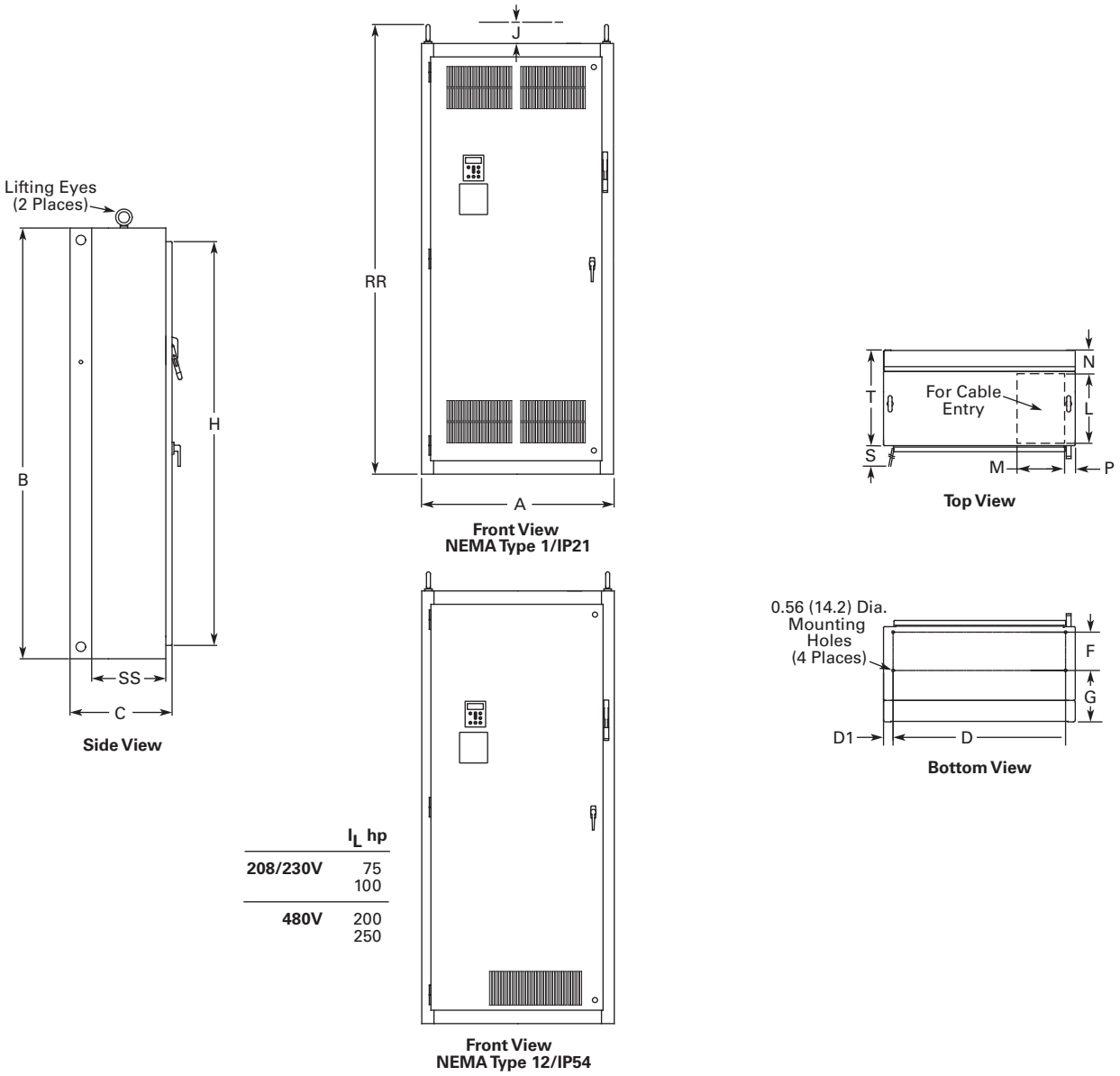

	I_L hp
208/230V	75 100
480V	200 250

For reference only, dimensions are subject to change.

Wide	High	Deep	Mounting							Door Height	Min. Air Space	
A	**B**	**C**	**D**	**D1**	**E**	**E1**	**F**	**G**	**G1**	**H**	**J**	**K**
40.0 (1016)	90.0 (2286)	21.3 (541)	36.0 (914)	2.0 (51)	—	—	8.0 (203)	10.8 (273)	—	84.4 (2143)	4.0 (102)	—

Cable Entry					Door Clearance										Max. Approx. Shipping Weight
L	**M**	**N**	**P**	**R**	**S**	**T**	**U**	**V**	**W**	**RR**	**SS**	**TT**	**UU**	**VV**	**Lbs (kg)**
15.0 (381)	10.0 (254)	4.8 (122)	2.0 (51)	—	36.3 (921)	20.0 (508)	—	—	—	94.0 (2387)	15.5 (394)	—	—	—	1275 (579)

Approximate Dimensions in Inches (mm)

Size 5-1P

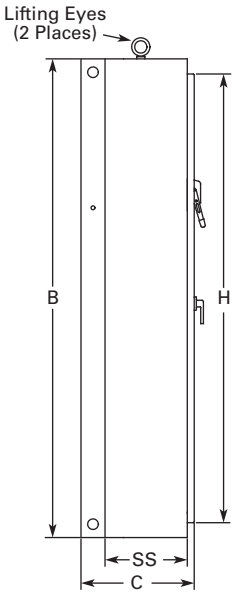

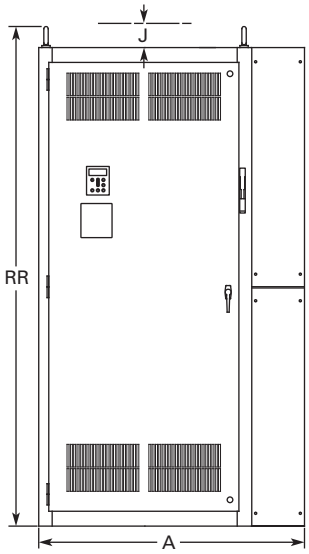

Front View
NEMA Type 1/IP21

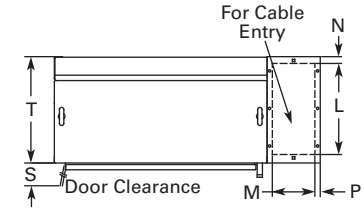

Top View

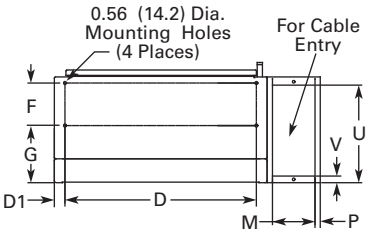

Bottom View

	I_L hp
208/230V	75 100
480V	200 250

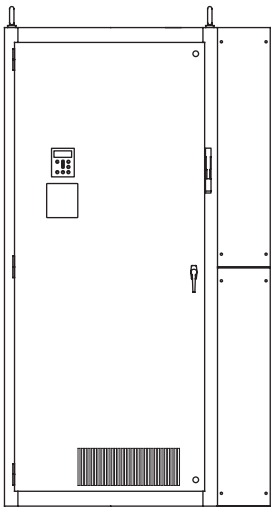

Front View
NEMA Type 12/IP54

For reference only, dimensions are subject to change.

Wide	High	Deep	Mounting							Door Height	Min. Air Space	
A	**B**	**C**	**D**	**D1**	**E**	**E1**	**F**	**G**	**G1**	**H**	**J**	**K**
50.0 (1270)	90.0 (2286)	21.3 (541)	36.0 (914)	2.0 (51)	—	—	8.0 (203)	10.8 (273)	—	84.4 (2143)	4.0 (102)	—

Cable Entry					Door Clearance										Max. Approx. Shipping Weight
L	**M**	**N**	**P**	**R**	**S**	**T**	**U**	**V**	**W**	**RR**	**SS**	**TT**	**UU**	**VV**	**Lbs (kg)**
17.1 (435)	8.0 (203)	1.3 (33)	1.0 (25)	—	36.3 (921)	20.0 (508)	18.4 (466)	1.3 (32)	—	94.0 (2387)	15.5 (394)	—	—	—	1375 (624)

Approximate Dimensions in Inches (mm)

Size 5-2P

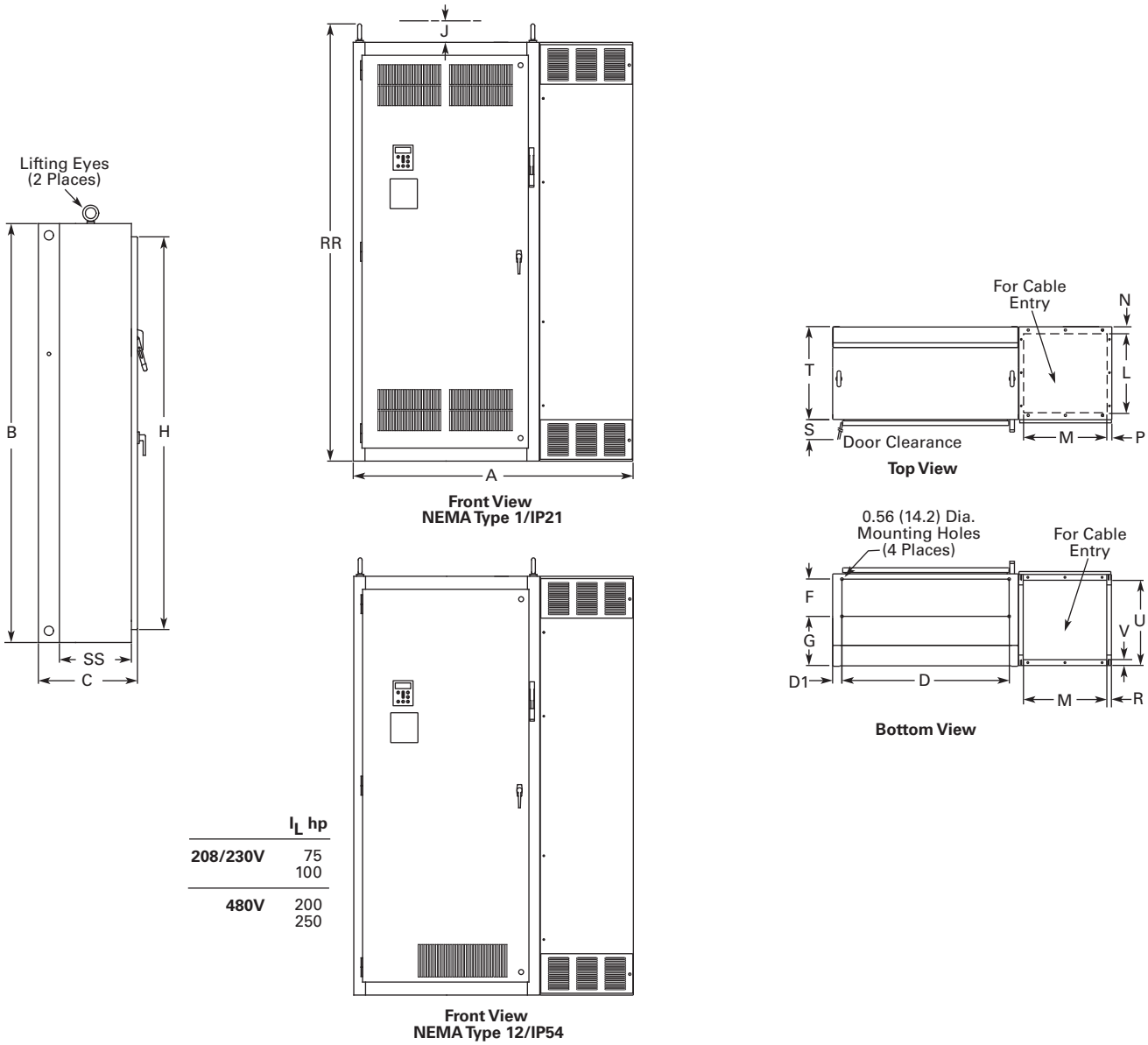

	I_L hp
208/230V	75 100
480V	200 250

For reference only, dimensions are subject to change.

Wide A	High B	Deep C	Mounting D	D1	E	E1	F	G	G1	Door Height H	Min. Air Space J	K
Enclosure Size 5-2P												
60.0 (1524)	90.0 (2286)	21.3 (541)	36.0 (914)	2.0 (51)	—	—	8.0 (203)	10.8 (273)	—	84.4 (2143)	4.0 (102)	—

Cable Entry L	M	N	P	R	Door Clearance S	T	U	V	W	RR	SS	TT	UU	VV	Max. Approx. Shipping Weight Lbs (kg)
17.0 (432)	18.0 (457)	1.5 (38)	1.0 (25)	0.9 (23)	36.3 (921)	20.0 (508)	18.4 (466)	1.3 (32)	—	94.0 (2387)	15.5 (394)	—	—	—	1585 (720)

Approximate Dimensions in Inches (mm)

Size 6

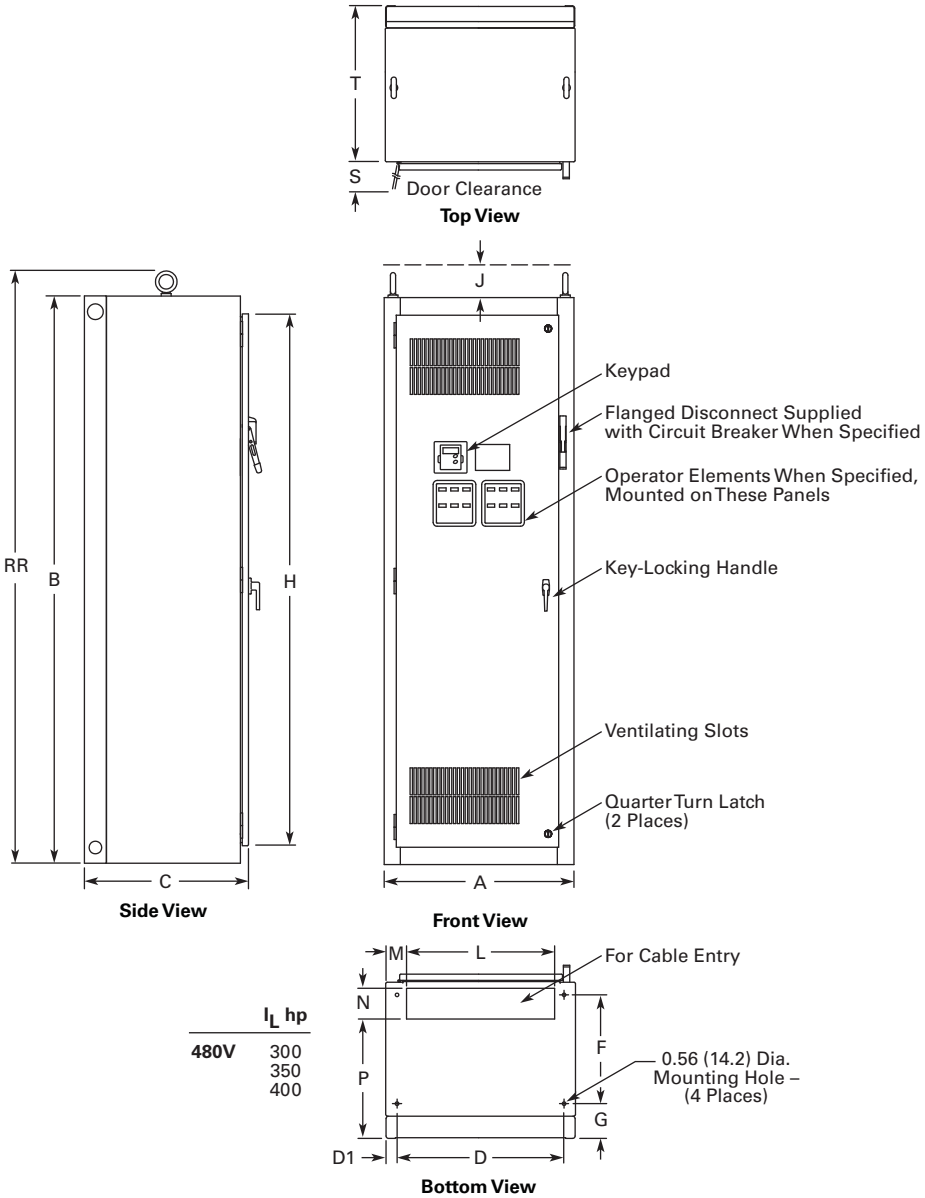

	I_L hp
480V	300
	350
	400

For reference only, dimensions are subject to change. See **Page V6-T2-57**, notes 3 and 5 for enclosure and option selection.

Wide	High	Deep	Mounting							Door Height	Min. Air Space	
A	B	C	D	D1	E	E1	F	G	G1	H	J	K
30.0 (762)	90.0 (2286)	26.0 (660)	26.5 (673)	1.8 (46)	—	—	17.3 (438)	5.5 (140)	—	84.4 (2143)	4.0 (102)	—

Cable Entry					Door Clearance										Max. Approx. Shipping Weight
L	M	N	P	R	S	T	U	V	W	RR	SS	TT	UU	VV	Lbs (kg)
23.5 (597)	3.3 (84)	4.5 (114)	19.3 (490)	—	26.2 (667)	24.8 (629)	—	—	—	93.9 (2386)	—	—	—	—	1500 (681)

Approximate Dimensions in Inches (mm)

Size 8

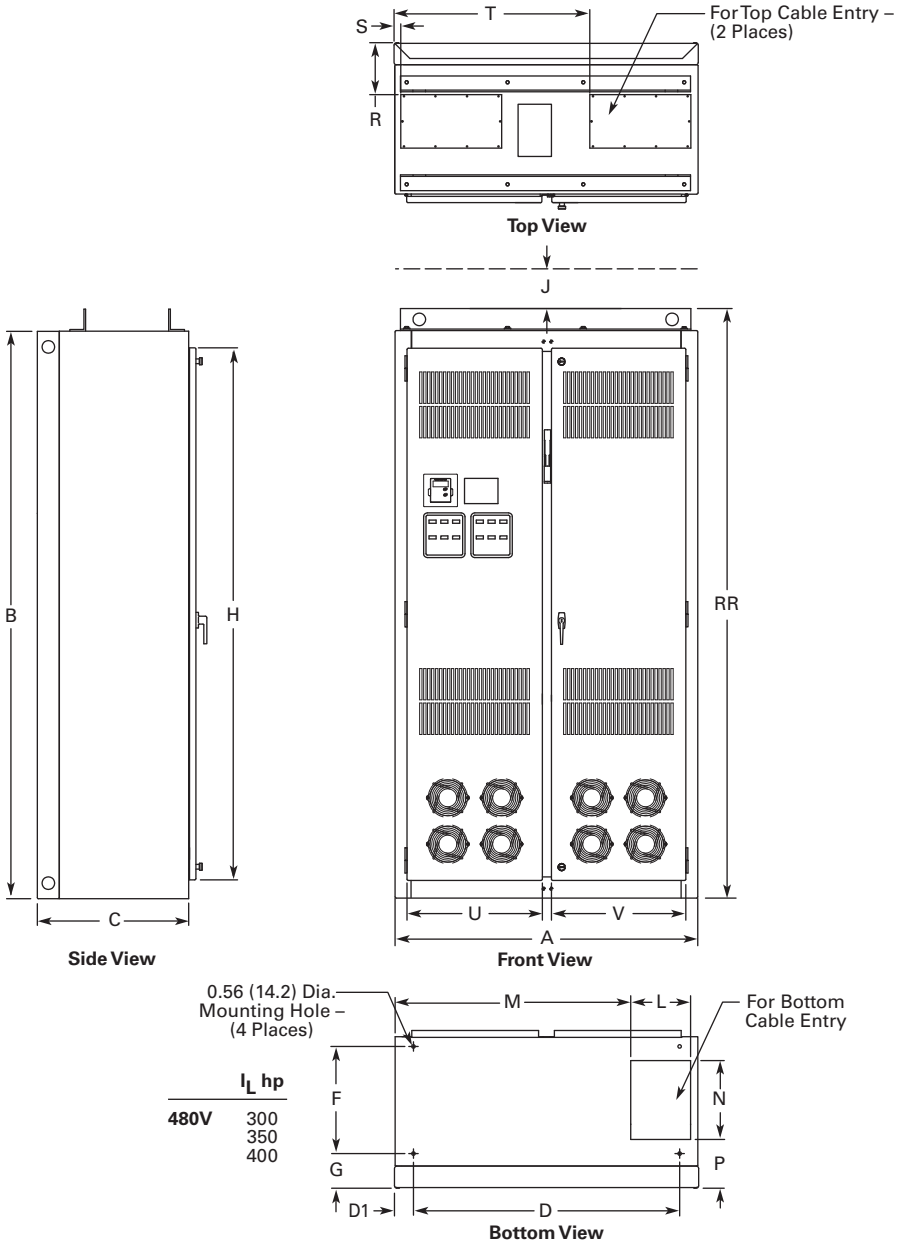

For reference only, dimensions are subject to change. See **Page V6-T2-57**, notes 3 and 5 for enclosure and option selection.

Wide A	High B	Deep C	Mounting D	D1	E	E1	F	G	G1	Door Height H	Min. Air Space J	K
48.0 (1219)	90.0 (2286)	24.0 (610)	42.2 (1072)	3.0 (77)	—	—	—	5.5 (139)	—	84.4 (2143)	4.0 (102)	—

Cable Entry L	M	N	P	R	S	T	U	V	W	RR	SS	TT	UU	VV	Max. Approx. Shipping Weight Lbs (kg)
9.5 (241)	37.5 (952)	12.5 (318)	7.7 (196)	8.3 (210)	1.3 (32)	31.0 (787)	21.5 (545)	21.3 (541)	—	93.5 (2375)	—	—	—	—	2000 (908)

Approximate Dimensions in Inches (mm)

Size 9

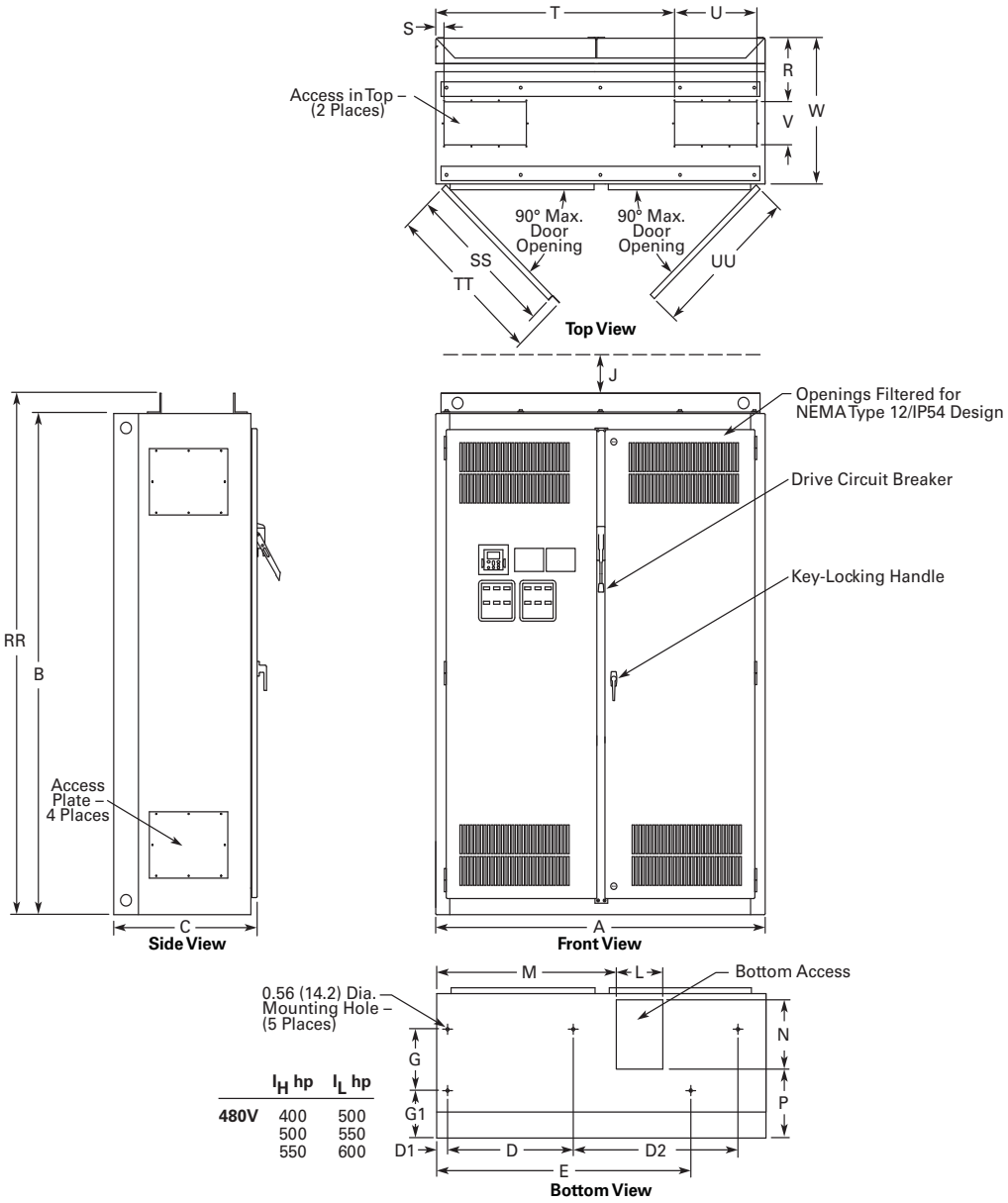

	I_H hp	I_L hp
480V	400	500
	500	550
	550	600

For reference only, dimensions are subject to change. See **Page V6-T2-57**, notes 3 and 5 for enclosure and option selection.

Wide A	High B	Deep C	Mounting D	D1	E	E1	F	G	G1	Door Height H	Min. Air Space J	K
60.0 (1524)	90.0 (2286)	260.1 (664)	22.9 (582)	2.0 (51)	30.0 (762)	44.3 (1125)	10.6 (270)	10.6 (270)	8.2 (208)	—	4.0 (102)	—

Cable Entry L	M	N	P	R	S	T	U	V	W	RR	SS	TT	UU	VV	Max. Approx. Shipping Weight Lbs (kg)
8.5 (216)	32.7 (831)	12.0 (305)	11.9 (303)	9.8 (249)	1.5 (38)	43.5 (1105)	15.0 (381)	7.5 (191)	25.0 (635)	93.5 (2375)	27.4 (696)	290.1 (738)	270.1 (687)	—	2500 (1135)

SVX9000 VFD Pump Panels

Contents

Description	Page
SVX9000 Open Drives	V6-T2-17
SVX9000 Enclosed Drives	V6-T2-52
SVX9000 VFD Pump Panels	
Catalog Number Selection	V6-T2-79
Product Selection	V6-T2-80
Options	V6-T2-85
Technical Data and Specifications	V6-T2-89
Wiring Diagrams	V6-T2-91
Dimensions	V6-T2-92

SVX9000 VFD Pump Panels

Product Description

- **Standard Enclosed**—covers a wide range of the most commonly ordered options. Pre-engineering eliminates the lead time normally associated with customer specific options.
- **Modified Standard Enclosed**—applies to specific customer requirements that vary from the Standard Enclosed offering, such as the need for an additional indicating light or minor modifications to drawings. *Consult your Eaton representative for assistance in pricing and lead time.*
- **Custom Engineered**—for those applications with more unique or complex requirements, these are individually engineered to the customer's needs. *Consult your Eaton representative for assistance in pricing and lead time.*

Features

- NEMA Type 12/IP54 or NEMA Type 3R enclosures
- Input voltage: 208V, 230V, 480V and 575V (consult factory)
- Complete range of control, network and power options
- Horsepower range:
  - 208V—3/4 to 100 hp I_H; 1 to 100 hp I_L
  - 230V—3/4 to 100 hp I_H; 1 to 100 hp I_L
  - 480V—1 to 350 hp I_H; 1-1/2 to 400 hp I_L
- HMCP padlockable
- Single-phase input available—consult factory

Standards and Certifications

- UL Listed
- cUL Listed

Listed Listed

Product Identification

SVX9000 Pump Application

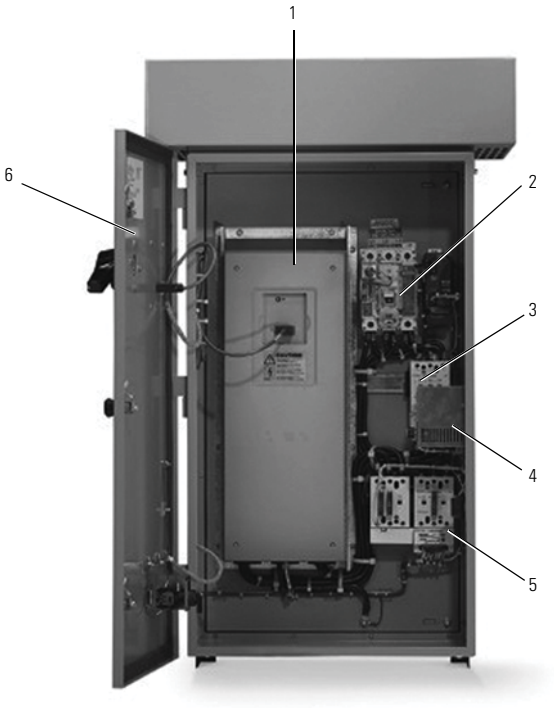

1 SVX9000 variable frequency drive
2 Input disconnect (HMCP) Option P1
3 Input contactor (included as standard with bypass option)
4 Space heater Option S9
5 Bypass contactor Option RA/RB
6 Door-mounted keypad (included as standard)

Catalog Number Selection

SVX9000 Enclosed NEMA Type 12/IP54/3R Drive

SVX 010 2 4 E P

Build Alphabetically and Numerically

Product Family
SVX = Enclosed drives

Horsepower Rating		
F07 = 3/4 hp **001** = 1 hp **F15** = 1-1/2 hp **002** = 2 hp **003** = 3 hp **005** = 5 hp **007** = 7-1/2 hp	**010** = 10 hp **015** = 15 hp **020** = 20 hp **025** = 25 hp **030** = 30 hp **040** = 40 hp **050** = 50 hp	**060** = 60 hp **075** = 75 hp **100** = 100 hp **125** = 125 hp **150** = 150 hp **200** = 200 hp
Consult factory ①		
250 = 250 hp **300** = 300 hp	**350** = 350 hp **400** = 400 hp	

Enclosure Rating
2 = NEMA Type 12/IP54
3 = NEMA Type 3R

Voltage Rating	
Three-phase **1** = 208V **2** = 230V **4** = 480V	Single-phase **J** = 230V **K** = 480V

Application—Torque/Braking ③
A = I_L/no brake chopper
B = I_L/internal brake chopper
D = I_H/no brake chopper
E = I_H/internal brake chopper

Enclosed Style
P = Pumping application

Enclosed Options ②⑤⑥		Type
K1	Door-mounted speed potentiometer ④	Control
K2	Door-mounted speed potentiometer with HOA selector switch ④	Control
K5	MANUAL/AUTO reference switch (22 mm)	Control
K6	START and STOP pushbuttons (22 mm)	Control
K9	(2) Factory installed auxiliary contacts	Power
L1	Power on and fault pilot lights	Light
L2	Bypass pilot lights for RA bypass option ⑧	Addl. bypass
LD	Green STOP light	Light
LE	Red RUN light	Light
LU	Light (22 mm)	Light
LW	PTT light (22 mm)	Light
LY	Adder for LED each	Light
P1	Input disconnect (HMCP) 100 kAIC	Input
P3	Input line fuses (200 kAIC)	Input
P7	Input power surge protection	Input
P8	TVSS transient voltage surge suppressor	Input
PE	Output contactor	Output
RA	Manual HOA bypass controller ⑧	Bypass
S5	Floor stand 22 in	Enclosure
S9	Space heater w/out CPT	Enclosure
SA	Space heater w/CPT	Enclosure
SB	Socket type control relay	Enclosure
SE	On-delay timer	Enclosure
SF	Off-delay timer	Enclosure

Communication Options ⑦
C2 = Modbus
C3 = Profibus DP
C4 = LonWorks
C5 = Profibus DP (D9 connector)
C6 = CanOpen (slave)
C7 = DeviceNet
C8 = Modbus (D9 type connector)
CA = Johnson Controls N2
CI = Modbus TCP
CJ = BACnet
CK = Ethernet IP
D3 = RS-232 with D9 connection

Control Options
B1 = 6 DI, 1 ext +24 Vdc/EXT +24 Vdc
B2 = 1 RO (NC-NO), 1 RO (NO), 1 therm
B4 = 1 AI (mA isolated), 2 AO (mA isolated), 1 ext +24 Vdc/EXT +24 Vdc
B5 = 3 RO (NO)
B8 = 1 ext +24 Vdc/EXT +24 Vdc, 3 Pt100
B9 = 1 RO (NO), 5 DI 42–240 Vac input

Notes

① Consult factory.
② Local/remote keypad is included as the standard control panel.
③ Brake chopper is a factory installed option only, see drive options on **Page V6-T2-18**. External dynamic braking resistors not included. Consult factory.
④ Includes local/remote speed reference switch.
⑤ Some options are voltage and/or horsepower specific. Consult your Eaton representative for details.
⑥ See **Page V6-T2-87** for descriptions.
⑦ See **Pages V6-T2-85** and **V6-T2-86** for complete descriptions.
⑧ Bypass options applicable only in the pump panel three-phase design.

Product Selection

When Ordering

- Select a base catalog number that meets the application requirements—nominal horsepower, voltage and enclosure rating (the enclosed drive's continuous output amp rating should be equal to or greater than the motor's full load amp rating). The base enclosed package includes a standard drive, door mounted local/remote keypad and enclosure.
- If dynamic brake chopper or control/communication option is desired, change the appropriate code in the base catalog number.
- Select enclosed options. Add the codes as suffixes to the base catalog number in alphabetical and numeric order.
- **Read all footnotes**.

208V Drives

SVX9000 Enclosed Drives

Pump Panel Style (Three-Phase)

		NEMA Type 12/IP54		NEMA Type 3R	
Enclosure Size ①	hp	Frame Size	Base Catalog Number ②	Frame Size	Base Catalog Number ②
High Overload Drive and Enclosure					
A	3/4	4	**SVXF0721EP**	4	**SVXF0731EP**
	1		**SVX00121EP**		**SVX00131EP**
	1-1/2		**SVXF1521EP**		**SVXF1531EP**
	2		**SVX00221EP**		**SVX00231EP**
	3	5	**SVX00321EP**	5	**SVX00331EP**
	5		**SVX00521EP**		**SVX00531EP**
	7-1/2		**SVX00721EP**		**SVX00731EP**
	10	6	**SVX01021EP**	6	**SVX01031EP**
B	15		**SVX01521EP**		**SVX01531EP**
	20	7	**SVX02021DP**	7	**SVX02031DP**
	25		**SVX02521DP**		**SVX02531DP**
C	30		**SVX03021DP**		**SVX03031DP**
	40	8	**SVX04021DP**	8	**SVX04031DP**
	50		**SVX05021DP**		**SVX05031DP**
D	60		**SVX06021DP**		**SVX06031DP**
	75	9	**SVX07521DP**	9	**SVX07531DP**
	100		**SVX10021DP**		**SVX10031DP**
Low Overload Drive and Enclosure					
A	1	4	**SVX00121BP**	4	**SVX00131BP**
	1-1/2		**SVXF1521BP**		**SVXF1531BP**
	2		**SVX00221BP**		**SVX00231BP**
	3		**SVX00321BP**		**SVX00331BP**
	5	5	**SVX00521BP**	5	**SVX00531BP**
	7-1/2		**SVX00721BP**		**SVX00731BP**
	10		**SVX01021BP**		**SVX01031BP**
	15	6	**SVX01521BP**	6	**SVX01531BP**
B	20		**SVX02021BP**		**SVX02031BP**
	25	7	**SVX02521AP**	7	**SVX02531AP**
	30		**SVX03021AP**		**SVX03031AP**
C	40		**SVX04021AP**		**SVX04031AP**
	50	8	**SVX05021AP**	8	**SVX05031AP**
	60		**SVX06021AP**		**SVX06031AP**
D	75		**SVX07521AP**		**SVX07531AP**
	100	9	**SVX10021AP**	9	**SVX10031AP**

Notes

① Enclosure dimensions starting on **Page V6-T2-92**.
② Includes drive, local/remote keypad and enclosure.

230V Drives

SVX9000 Enclosed Drives

Pump Panel Style (Three-Phase)

		NEMA Type 12/IP54		NEMA Type 3R	
Enclosure Size ①	**hp**	**Frame Size**	**Base Catalog Number ②**	**Frame Size**	**Base Catalog Number ②**
High Overload Drive and Enclosure					
A	3/4	4	**SVXF0722EP**	4	**SVXF0732EP**
	1		**SVX00122EP**		**SVX00132EP**
	1-1/2		**SVXF1522EP**		**SVXF1532EP**
	2		**SVX00222EP**		**SVX00232EP**
	3	5	**SVX00322EP**	5	**SVX00332EP**
	5		**SVX00522EP**		**SVX00532EP**
	7-1/2		**SVX00722EP**		**SVX00732EP**
	10	6	**SVX01022EP**	6	**SVX01032EP**
B	15		**SVX01522EP**		**SVX01532EP**
	20	7	**SVX02022DP**	7	**SVX02032DP**
	25		**SVX02522DP**		**SVX02532DP**
C	30		**SVX03022DP**		**SVX03032DP**
	40	8	**SVX04022DP**	8	**SVX04032DP**
	50		**SVX05022DP**		**SVX05032DP**
D	60		**SVX06022DP**		**SVX06032DP**
	75	9	**SVX07522DP**	9	**SVX07532DP**
	100		**SVX10022DP**		**SVX10032DP**
Low Overload Drive and Enclosure					
A	1	4	**SVX00122BP**	4	**SVX00132BP**
	1-1/2		**SVXF1522BP**		**SVXF1532BP**
	2		**SVX00222BP**		**SVX00232BP**
	3		**SVX00322BP**		**SVX00332BP**
	5	5	**SVX00522BP**	5	**SVX00532BP**
	7-1/2		**SVX00722BP**		**SVX00732BP**
	10		**SVX01022BP**		**SVX01032BP**
	15	6	**SVX01522BP**	6	**SVX01532BP**
B	20		**SVX02022BP**		**SVX02032BP**
	25	7	**SVX02522AP**	7	**SVX02532AP**
	30		**SVX03022AP**		**SVX03032AP**
C	40		**SVX04022AP**		**SVX04032AP**
	50	8	**SVX05022AP**	8	**SVX05032AP**
	60		**SVX06022AP**		**SVX06032AP**
D	75		**SVX07522AP**		**SVX07532AP**
	100	9	**SVX10022AP**	9	**SVX10032AP**

Notes

① Enclosure dimensions starting on **Page V6-T2-92**.

② Includes drive, local/remote keypad and enclosure.

SVX9000 Enclosed Drives

Pump Panel Style (Single-Phase)

Enclosure Size ①	hp	NEMA Type 12/IP54 Frame Size	NEMA Type 12/IP54 Base Catalog Number ②	NEMA Type 3R Frame Size	NEMA Type 3R Base Catalog Number ②
Low Overload Drive and Enclosure					
A	3/4	4	**SVXF072JBP**	4	**SVXF073JBP**
	1		**SVX0012JBP**		**SVX0013JBP**
	2	5	**SVX0022JBP**	5	**SVX0023JBP**
	3		**SVX0032JBP**		**SVX0033JBP**
	5		**SVX0052JBP**		**SVX0053JBP**
	7-1/2	6	**SVX0072JBP**	6	**SVX0073JBP**
	10		**SVX0102JBP**		**SVX0103JBP**
B	15	7	**SVX0152JBP**	7	**SVX0153JBP**
	20		**SVX0202JAP**		**SVX0203JAP**
C	25	8	**SVX0252JAP**	8	**SVX0253JAP**
	30		**SVX0302JAP**		**SVX0303JAP**
	40		**SVX0402JAP**		**SVX0403JAP**

Notes

① Enclosure dimensions starting on **Page V6-T2-92**.

② Includes drive, local/remote keypad and enclosure.

480V Drives

SVX9000 Enclosed Drives

Pump Panel Style (Three-Phase)

		NEMA Type 12/IP54		NEMA Type 3R	
Enclosure Size ①	**hp**	**Frame Size**	**Base Catalog Number ②**	**Frame Size**	**Base Catalog Number ②**
High Overload Drive and Enclosure					
A	1	4	**SVX00124EP**	4	**SVX00134EP**
	1-1/2		**SVXF1524EP**		**SVXF1534EP**
	2		**SVX00224EP**		**SVX00234EP**
	3		**SVX00324EP**		**SVX00334EP**
	5		**SVX00524EP**		**SVX00534EP**
	7-1/2	5	**SVX00724EP**	5	**SVX00734EP**
	10		**SVX01024EP**		**SVX01034EP**
	15		**SVX01524EP**		**SVX01534EP**
	20	6	**SVX02024EP**	6	**SVX02034EP**
	25		**SVX02524EP**		**SVX02534EP**
B	30	7	**SVX03024EP**	7	**SVX03034EP**
	40		**SVX04024DP**		**SVX04034DP**
	50		**SVX05024DP**		**SVX05034DP**
	60		**SVX06024DP**		**SVX06034DP**
C	75	8	**SVX07524DP**	8	**SVX07534DP**
	100		**SVX10024DP**		**SVX10034DP**
	125		**SVX12524DP**		**SVX12534DP**
D	150	9	**SVX15024DP**	9	**SVX15034DP**
	200		**SVX20024DP**		**SVX20034DP**
Consult factory	250	10	**SVX25024DP**	10	**SVX25034DP**
	300		**SVX30024DP**		**SVX30034DP**
	350		**SVX35024DP**		**SVX35034DP**
Low Overload Drive and Enclosure					
A	1-1/2	4	**SVXF1524BP**	4	**SVXF1534BP**
	2		**SVX00224BP**		**SVX00234BP**
	3		**SVX00324BP**		**SVX00334BP**
	5		**SVX00524BP**		**SVX00534BP**
	7-1/2		**SVX00724BP**		**SVX00734BP**
	10	5	**SVX01024BP**	5	**SVX01034BP**
	15		**SVX01524BP**		**SVX01534BP**
	20		**SVX02024BP**		**SVX02034BP**
	25	6	**SVX02524BP**	6	**SVX02534BP**
	30		**SVX03024BP**		**SVX03034BP**
B	40	7	**SVX04024BP**	7	**SVX04034BP**
	50		**SVX05024AP**		**SVX05034AP**
	60		**SVX06024AP**		**SVX06034AP**
	75		**SVX07524AP**		**SVX07534AP**
C	100	8	**SVX10024AP**	8	**SVX10034AP**
	125		**SVX12524AP**		**SVX12534AP**
	150		**SVX15024AP**		**SVX15034AP**
D	200	9	**SVX20024AP**	9	**SVX20034AP**
	250		**SVX25024AP**		**SVX25034AP**
Consult factory	300	10	**SVX30024AP**	10	**SVX30034AP**
	400		**SVX40024AP**		**SVX40034AP**

Notes

① Enclosure dimensions starting on **Page V6-T2-92**.

② Includes drive, local/remote keypad and enclosure.

SVX9000 Enclosed Drives

Pump Panel Style (Single-Phase)

Enclosure Size ①	hp	NEMA Type 12/IP54 Frame Size	NEMA Type 12/IP54 Base Catalog Number ②	NEMA Type 3R Frame Size	NEMA Type 3R Base Catalog Number ②
Low Overload Drive and Enclosure					
A	3/4	4	**SVXF072KBP**	4	**SVXF073KBP**
	1		**SVX0012KBP**		**SVX0013KBP**
	2		**SVX0022KBP**		**SVX0023KBP**
	3		**SVX0032KBP**		**SVX0033KBP**
	5	5	**SVX0052KBP**	5	**SVX0053KBP**
	7-1/2		**SVX0072KBP**		**SVX0073KBP**
	10		**SVX0102KBP**		**SVX0103KBP**
	15	6	**SVX0152KBP**	6	**SVX0153KBP**
	20		**SVX0202KBP**		**SVX0203KBP**
B	25	7	**SVX0252KAP**	7	**SVX0253KAP**
	30		**SVX0302KAP**		**SVX0303KAP**
C	40	8	**SVX0402KAP**	8	**SVX0403KAP**
	50		**SVX0502KAP**		**SVX0503KAP**
	60		**SVX0602KAP**		**SVX0603KAP**

Notes

① Enclosure dimensions starting on **Page V6-T2-92**.

② Includes drive, local/remote keypad and enclosure.

Options

9000X Series Option Board Kits

The 9000X Series drives can accommodate a wide selection of expander and adapter option boards to customize the drive for your application needs. The drive's control unit is designed to accept a total of five option boards.

The 9000X Series factory installed standard board configuration includes an A9 I/O board and an A2 relay output board, which are installed in slots A and B.

Option Boards

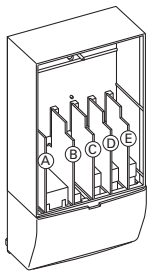

Option Board Kits

Option Kit Description ①	Allowed Slot Locations ②	Field Installed Catalog Number	Factory Installed Option Designator	SVX Ready Programs Basic	Local/ Remote	Standard	MSS	PID	Multi-P.	PFC
Standard I/O Cards										
2 RO (NC-NO)	B	**OPTA2**	—	■	■	■	■	■	■	■
6 DI, 1 DO, 2 AI, 1AO, 1 +10 Vdc ref, 2 ext +24 Vdc/EXT +24 Vdc	A	**OPTA9**	—	■	■	■	■	■	■	■
Extended I/O Cards										
6 DI, 1 ext +24 Vdc/EXT +24 Vdc	B, C, **D**, E	**OPTB1**	**B1**	—	—	—	—	—	■	■
1 RO (NC-NO), 1 RO (NO), 1 therm	B, C, **D**, E	**OPTB2**	**B2**	—	—	—	—	—	■	■
1 AI (mA isolated), 2 AO (mA isolated), 1 ext +24 Vdc/EXT +24 Vdc	B, C, **D**, E	**OPTB4**	**B4**	■	■	■	■	■	■	■
3 RO (NO)	B, C, **D**, E	**OPTB5**	**B5**	—	—	—	—	—	■	■
1 ext +24 Vdc/EXT +24 Vdc, 3 Pt100	B, C, **D**, E	**OPTB8**	**B8**	—	—	—	—	—	—	—
1 RO (NO), 5 DI 42–240 Vac input	B, C, **D**, E	**OPTB9**	**B9**	—	—	—	—	—	■	■
Communication Cards ③										
Modbus	D, **E**	**OPTC2**	**C2**	■	■	■	■	■	■	■
Modbus TCP	D, **E**	**OPTCI**	**CI**	■	■	■	■	■	■	■
BACnet	D, **E**	**OPTCJ**	**CJ**	■	■	■	■	■	■	■
Ethernet IP	D, **E**	**OPTCK**	**CK**	■	■	■	■	■	■	■
Johnson Controls N2	D, **E**	**OPTC2**	**CA**	—	—	—	—	—	—	—
Profibus DP	D, **E**	**OPTC3**	**C3**	■	■	■	■	■	■	■
LonWorks	D, **E**	**OPTC4**	**C4**	■	■	■	■	■	■	■
Profibus DP (D9 connector)	D, **E**	**OPTC5**	**C5**	■	■	■	■	■	■	■
CanOpen (slave)	D, **E**	**OPTC6**	**C6**	■	■	■	■	■	■	■
DeviceNet	D, **E**	**OPTC7**	**C7**	■	■	■	■	■	■	■
Modbus (D9 type connector)	D, **E**	**OPTC8**	**C8**	■	■	■	■	■	■	■
RS-232 with D9 connection	D, **E**	**OPTD3**	**D3**	■	■	■	■	■	■	■
Keypad										
9000X Series local/remote keypad	—	**KEYPAD-LOC/REM**	—	—	—	—	—	—	—	—
9000X Series remote mount keypad kit	—	**OPTRMT-KIT-9000X**	—	—	—	—	—	—	—	—
9000X Series RS-232 cable, 13 ft	—	**PP00104**	—	—	—	—	—	—	—	—

Notes

① AI = Analog Input; AO = Analog Output, DI = Digital Input, DO = Digital Output, RO = Relay Output
② Option card must be installed in one of the slots listed for that card. Slot indicated in bold is the preferred location.
③ OPTC2 is a multi-protocol option card.

Modbus RTU Network Communications

The Modbus Network Card OPTC2 is used for connecting the 9000X Drive as a slave on a Modbus network. The interface is connected by a 9-pin DSUB connector (female) and the baud rate ranges from 300 to 19200 baud. Other communication parameters include an address range from 1 to 247; a parity of None, Odd or Even; and the stop bit is 1.

Profibus Network Communications

The Profibus Network Card OPTC3 is used for connecting the 9000X Drive as a slave on a Profibus-DP network. The interface is connected by a 9-pin DSUB connector (female). The baud rates range from 9.6K baud to 12M baud, and the addresses range from 1 to 127.

LonWorks Network Communications

The LonWorks Network Card OPTC4 is used for connecting the 9000X Drive on a LonWorks network. This interface uses Standard Network Variable Types (SNVT) as data types. The channel connection is achieved using a FTT-10A Free Topology transceiver via a single twisted transfer cable. The communication speed with LonWorks is 78 kBits/s.

CanOpen (Slave) Communications

The CanOpen (Slave) Network Card OPTC6 is used for connecting the 9000X Drive to a host system. According to ISO11898 standard cables to be chosen for CAN bus should have a nominal impedance of 120 ohms, and specific line delay of nominal 5 nS/m. 120 ohms line termination resistors required for installation.

DeviceNet Network Communications

The DeviceNet Network Card OPTC7 is used for connecting the 9000X Drive on a DeviceNet Network. It includes a 5.08 mm pluggable connector. Transfer method is via CAN using a two-wire twisted shielded cable with two-wire bus power cable and drain. The baud rates used for communication include 125K baud, 250K baud and 500K baud.

Johnson Controls Metasys N2 Network Communications

The OPTC2 fieldbus board provides communication between the 9000X Drive and a Johnson Controls Metasys™ N2 network. With this connection, the drive can be controlled, monitored and programmed from the Metasys system. The N2 fieldbus is available as a factory installed option and as a field installable kit.

Modbus/TCP Network Communications

The Modbus/TCP Network Card OPTCI is used for connecting the 9000X Drive to Ethernet networks utilizing Modbus protocol. It includes an RJ-45 pluggable connector. This interface provides a selection of standard and custom register values to communicate drive parameters. The board supports 10 Mbps and 100 Mbps communication speeds. The IP address of the board is configurable over Ethernet using a supplied software tool.

BACnet Network Communications

The BACnet Network Card OPTCJ is used for connecting the 9000X Drive to BACnet networks. It includes a 5.08 mm pluggable connector. Data transfer is Master-Slave/Token Passing (MS/TP) RS-485. This interface uses a collection of 30 Binary Value Objects (BVOs) and 35 Analog Value Objects (AVOs) to communicate drive parameters. The card supports 9.6, 19.2 and 38.4 Kbaud communication speeds and supports network addresses 1–127.

Ethernet/IP Network Communications

The Ethernet/IP Network Card OPTCK is used for connecting the 9000X Drive to Ethernet/Industrial Protocol networks. It includes an RJ-45 pluggable connector. The interface uses CIP objects to communicate drive parameters (CIP is "Common Industrial Protocol", the same protocol used by DeviceNet). The board supports 10 Mbps and 100 Mbps communication speeds. The IP address of the board is configurable by Static, BOOTP and DHCP methods.

Control/Communication Option Descriptions

For availability, see Product Selection for base drive voltage required.

Available Control/Communications Options

Option	Description	Option Type
K1	**Door-Mounted Speed Potentiometer—**Provides the SVX9000 with the ability to adjust the frequency reference using a door-mounted potentiometer. This option uses the 10 Vdc reference to generate a 0–10V signal at the analog voltage input signal terminal. When the HOA bypass option is added, the speed is controlled when the HOA switch is in the HAND position. Without the HOA bypass option, a two-position switch (labeled local/remote) is provided on the keypad to select speed reference from the Speed Potentiometer or a remote speed signal.	Control
K2	**Door-Mounted Speed Potentiometer with HOA Selector Switch—**Provides the SVX9000 with the ability to start/stop and adjust the speed reference from door-mounted control devices or remotely from customer supplied inputs. In HAND position, the drive will start and the speed is controlled by the door-mounted speed potentiometer. The drive will be disabled in the OFF position. When AUTO is selected, the drive run and speed control commands are via user-supplied dry contact and 4–20 mA signal.	Control
K5	**MANUAL/AUTO Speed Reference Switch**—Provides a door-mounted selector switch for MANUAL/AUTO speed reference.	Control
K6	**START and STOP Pushbuttons (22 mm)**—START (green) STOP (red). Provide door-mounted START and STOP pushbuttons for either bypass or non-bypass configurations.	Control
K9	**(2) Factory Installed Auxiliary Contacts**—Provide two NO/NC auxiliary contacts.	Power
L1	**Power On and Fault Pilot Lights**—Provide a white power on light that indicates power to the enclosed cabinet and a red fault light that indicates a drive fault has occurred.	Light
L2	**Bypass Pilot Lights for RB, RA Bypass Options**—A green light indicates when the motor is running in inverter mode and an amber light indicates when the motor is running in bypass mode. The lights are mounted on the enclosure door, above the switches.	Addl. Bypass
LD	**Green STOP Light (22 mm)**—Provides a green light that indicates the drive is stopped.	Light
LE	**Red RUN Pilot Light (22 mm)**—Provides a red run pilot light that indicates the drive is running.	Light
LU	**Misc. Light (22 mm)**—Provides a misc. "user defined" pilot light. User to define light function and color.	Light
LW	**PTT (Push-To-Test) Light (22 mm)**—Provides misc. "user defined" PTT pilot light. User to define light function and color.	Light
LY	**Adder for LED Each**—Changes light packages from standard incandescent bulb to LED style bulb.	Light
P1	**Input Disconnect Assembly Rated to 100 kAIC**—High Interrupting Motor Circuit Protector (HMCP) that provides a means of short circuit protection for the power cables between it and the SVX9000, and protection from high-level ground faults on the power cable. Allows a convenient means of disconnecting the SVX9000 from the line and the operating mechanism can be padlocked in the OFF position. This is factory mounted in the enclosure.	Input
P3	**Input Line Fuses Rated to 200 kAIC**—Provide high-level fault protection of the SVX9000 input power circuit from the load side of the fuses to the input side of the power transistors. This option consists of three 200 kA fuses, which are factory mounted in the enclosure.	Input
P7	**MOV Surge Suppressor**—Provides a Metal Oxide Varistor (MOV) connected to the line side terminals and is designed to clip line side transients.	Input
P8	**TVSS Transient Voltage Surge Suppressor**—Provides transient voltage surge suppression of the unit. Consult factory for ratings.	Input
PE	**Output Contactor**—Provides a means for positive disconnection of the drive output from the motor terminals. The contactor coil is controlled by the drive's run or permissive logic. NC and NO auxiliary contacts rated at 10A, 600 Vac are provided for customer use. Bypass option **RA** includes an output contactor as standard. This option includes a low VA 115 Vac fused control power transformer and is factory mounted in the enclosure.	Output
RA	**Manual HOA Bypass Controller**—The Manual HAND/OFF/AUTO (HOA)—3-contactor—bypass option provides a means of bypassing the SVX9000, allowing the AC motor to be operated at full speed directly from the AC supply line. This option consists of an input disconnect, a fused control power transformer, and a full voltage bypass starter with a door mounted HOA selector switch and an INVERTER/BYPASS switch. The HOA switch provides the ability to start and stop the drive in the inverter mode. For applications up to 100 hp, a Freedom Series IEC input contactor, a Freedom Series IEC output contactor, and a Freedom Series IEC starter with a bimetallic overload relay is included. For applications above 100 hp, an Advantage input contactor, an Advantage output contactor and an Advantage starter with electronic overload protection is included. The contactors are mechanically and electrically interlocked (see power diagram on **Page V6-T2-91**).	Bypass
S5	**Floor Stand 22 in**—Converts a Size A or B, normally wall mounted enclosure to a floor standing enclosure with a height of 22 in (558.8 mm).	Enclosure
S9	**Space Heater without CPT**—Prevents condensation from forming in the enclosure when the drive is inactive or in storage. Includes a thermostat for variable temperature control. A 200W heater is installed in enclosures A and B, and 400W heater is installed in enclosures C and D. Requires a customer supplied 115V remote supply source.	Enclosure
SA	**Space Heater with CPT**— Prevents condensation from forming in the enclosure when the drive is inactive or in storage. Includes a thermostat for variable temperature control. A 200W heater is installed in enclosures A and B, and 400W heater is installed in enclosures C and D. Provided with CPT connected to load side of input disconnect.	Enclosure
SB	**Ice Cube Style Control Relay**—Provides misc. "user defined" 4PDT control relay. Requires user to define functionality.	Enclosure
SE	**On-Delay Timer (Delay on Make)**—Provides misc. "user defined" time delay relay. Requires user to define functionality and time setting requirement.	Enclosure
SF	**Off-Delay Timer (Delay on Break)**—Provides misc. "user defined" time delay relay. Requires user to define functionality and time setting requirement.	Enclosure

VFD Pump Panel Options

Brake Chopper Options ①

208V and 230V: NEMA Type 12/IP54/3R, I_H hp 3/4 to 100; I_L hp 1 to 100
480V: NEMA Type 12/IP54/3R, I_H hp 1 to 400; I_L hp 1-1/2 to 400

208V and 230V Control Options, 3/4–100 hp ②

Description	Catalog Number Suffix
Door-mounted speed potentiometer	**K1**
Door-mounted speed potentiometer with HOA selector switch	**K2**
Manual/auto reference switch (22 mm)	**K5**
START and STOP pushbuttons (22 mm)	**K6**

480V Control Options, 1–800 hp ②

Description	Catalog Number Suffix
Door-mounted speed potentiometer	**K1**
Door-mounted speed potentiometer with HOA selector switch	**K2**
Manual/auto reference switch (22 mm)	**K5**
START and STOP pushbuttons (22 mm)	**K6**

208V and 230V Light Options, 3/4–100 hp ②

Description	Catalog Number Suffix
Power on/fault pilot lights (22 mm)	**L1**
Green STOP light (22 mm)	**LD**
Red RUN light (22 mm)	**LE**
Misc. light (22 mm)	**LU**
PTT light (22 mm)	**LW**
LED	**LY**

480V Light Options, 1–800 hp ②

Description	Catalog Number Suffix
Power on/fault pilot lights (22 mm)	**L1**
Green STOP light (22 mm)	**LD**
Red RUN light (22 mm)	**LE**
Misc. light (22 mm)	**LU**
PTT light (22 mm)	**LW**
LED	**LY**

Notes

① External dynamic braking resistors not included. Consult factory.
② Consult factory for adder information.
③ See **Page V6-T2-87** for details.
④ Bypass options applicable only in the pump panel three-phase design.

208V, 230V and 480V Enclosure Options, Sizes A–D ②

Description	Catalog Number Suffix
Floor stand 22 in (558.8 mm)	**S5**
Space heater without CPT	**S9**
Space heater with CPT	**SA**
Socket type control relay	**SB**
On-delay timer	**SE**
Off-delay timer	**SF**

208 and 230V Power Options, 3/4–100 hp ②

Description	Catalog Number Suffix
Two auxiliary contacts installed	**K9**
Input disconnect (HMCP) 100 kAIC	**P1**
Input line fuses 200 kAIC	**P3**
Input power surge protection	**P7**
TVSS transient voltage surge suppressor	**P8**
Output contactor	**PE**

480V Power Options, 1–400 hp ②

Description	Catalog Number Suffix
Two auxiliary contacts installed	**K9**
Input disconnect (HMCP) 100 kAIC	**P1**
Input line fuses 200 kAIC	**P3**
Input power surge protection	**P7**
TVSS transient voltage surge suppressor	**P8**
Output contactor	**PE**

208 and 230V Bypass Options, 3/4–100 hp ②③

Description	Catalog Number Suffix
Bypass pilot lights for RA option	**L2** ④
Manual HOA bypass controller	**RA** ④

480V Bypass Options, 1–400 hp ②③

Description	Catalog Number Suffix
Bypass pilot lights for RA option	**L2** ④
Manual HOA bypass controller	**RA** ④

Technical Data and Specifications

9000X VFD Pump Panels

Description	NEMA Type 12/IP54 or NEMA Type 3R Specification
Primary Design Features	
45–66 Hz input frequency	Standard
Output (AC volts maximum)	Input voltage base
Output frequency range	0–320 Hz
Initial output current (I_H)	250% for 2 seconds
Overload (1 minute [I_H/I_L])	150%/110%
Enclosure space heater	Optional
Oversize enclosure	Standard
Output contactor	Optional
Bypass motor starter	Optional
Listings	UL, cUL
Protection Features	
Incoming line fuses	Optional
AC input circuit disconnect	Optional
Line reactors	Standard
Phase rotation insensitive	Standard
EMI filter	Standard—Thru Frame 9
Input phase loss protection	Standard
Input overvoltage protection	Standard
Line surge protection	Standard
Output short circuit protection	Standard
Output ground fault protection	Standard
Output phase protection	Standard
Overtemperature protection	Standard
DC overvoltage protection	Standard
Drive overload protection	Standard
Motor overload protection	Standard
Programmer software	Optional
Local/remote keypad	Standard
Keypad lockout	Standard
Fault alarm output	Standard
Built-in diagnostics	Standard

Description	NEMA Type 12/IP54 or NEMA Type 3R Specification
Input/Output Interface Features	
Setup adjustment provisions	
Remote keypad/display	Standard
Personal computer	Standard
Operator control provisions	
Drive mounted keypad/display	Standard
Remote keypad/display	Standard
Conventional control elements	Standard
Serial communications	Optional
115 Vac control circuit	Optional
Speed setting inputs	
Keypad	Standard
0–10 Vdc potentiometer/voltage signal	Standard
4–20 mA isolated	Configurable
4–20 mA differential	Configurable
Analog outputs	
Speed/frequency	Standard
Torque/load/current	Programmable
Motor voltage	Programmable
Kilowatts	Programmable
0–10 Vdc signals	Configurable w/jumpers
4–20 mA DC signals	Standard
Isolated signals	Optional
Discrete outputs	
Fault alarm	Standard
Drive running	Standard
Drive at set speed	Programmable
Optional parameters	14
Dry contacts	1 (2 relays Form C)
Open collector outputs	1
Additional discrete outputs	Optional
Communications	
RS-232	Standard
RS-422/485	Optional
DeviceNet™	Optional
Modbus RTU	Optional
CanOpen (slave)	Optional
Profibus-DP	Optional
Lonworks®	Optional
Johnson Controls Metasys™ N2	Optional

9000X VFD Pump Panels, continued

Description	NEMA Type 12/IP54 or NEMA Type 3R Specification
Performance Features	
Sensorless vector control	Standard
Volts/hertz control	Standard
IR and slip compensation	Standard
Electronic reversing	Standard
Dynamic braking	Optional ①
DC braking	Standard
PID setpoint controller	Programmable
Critical speed lockout	Standard
Current (torque) limit	Standard
Adjustable acceleration/deceleration	Standard
Linear or S curve accel/decel	Standard
Jog at preset speed	Standard
Thread/preset speeds	7
Automatic restart	Selectable
Coasting motor start	Standard
Coast or ramp stop selection	Standard
Elapsed time meter	Optional
Carrier frequency adjustment	1–16 kHz
Standard Conditions for Application and Service	
Operating ambient temperature	0 to 40°C
Storage temperature	–40 to 60°C
Humidity (maximum), non-condensing	95%
Altitude (maximum without derate)	3300 ft (1000m)
Line voltage variation	+10/–15%
Line frequency variation	45–66 Hz
Efficiency	>96%
Power factor (displacement)	0.96

Standard I/O Specifications

Description	Specification
Six–digital input programmable	24V: "0" ≤10V, "1" ≥18V,R_i >5 kohms
Two–analog input configurable w/jumpers	Voltage: 0–±10V, R_i >200 kohms Current: 0 (4)–20 mA, R_i = 250 ohms
Two–digital output programmable	Form C relays 250 Vac 30 Vdc 2 amp resistive
One–analog output programmable configurable w/jumper	0–20 mA, R_L max. 500 ohms 10 bits ±2%
One digital output programmable	Open collector 48 Vdc 50 mA

I/O Specifications for Control/Communication Options

Description	Specification
Analog voltage, input	0–±10V, R_i ≥200 kohms
Analog current, input	0 (4)–20 mA, R_i = 250 ohms
Digital input	24V: "0" ≤10V, "1" ≥18V, R_i >5 kohms
Auxiliary voltage	24V (±20%), max. 50 mA
Reference voltage	10V ±3%, max. 10 mA
Analog current, output	0 (4)–20 mA, R_L = 500 kohms, resolution 10 bit, accuracy ≤±2%
Analog voltage, output	0 (2)–10V, R_L ≥1 k kohms, resolution 10 bit, accuracy ≤±2%
Relay output	
Maximum switching voltage	300 Vdc, 250 Vac
Maximum switching load	8A/24 Vdc, 0.4A/300 Vdc, 2 kVA/250 Vac
Maximum continuous load	2A rms
Thermistor input	R_{trip} = 4.7 kohms

Note

① Some horsepower units include dynamic braking chopper as standard—refer to individual drive sections.

Wiring Diagrams

Power Diagram for Bypass Option RA

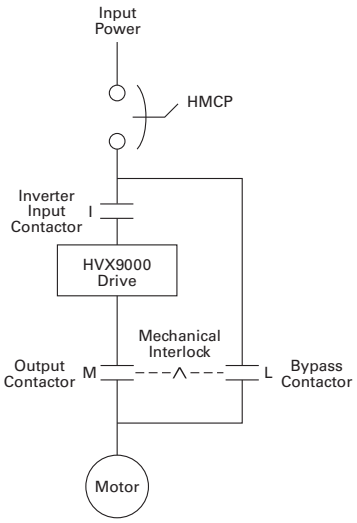

A2 Board Control Wiring

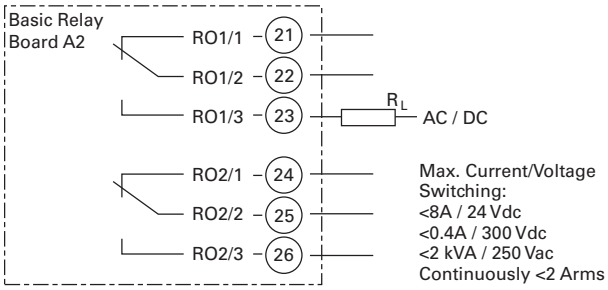

A9 Board Control Wiring

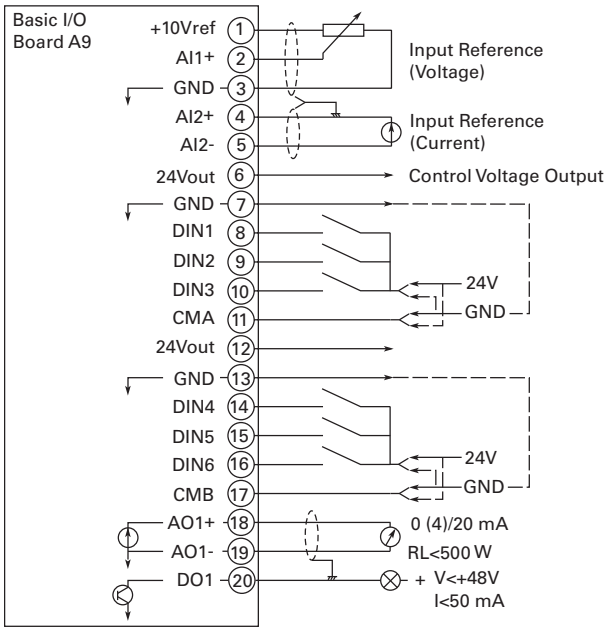

—— Indicates Connections for Inverted Signals

SVX9000 Pump Panel Bypass Power Wiring

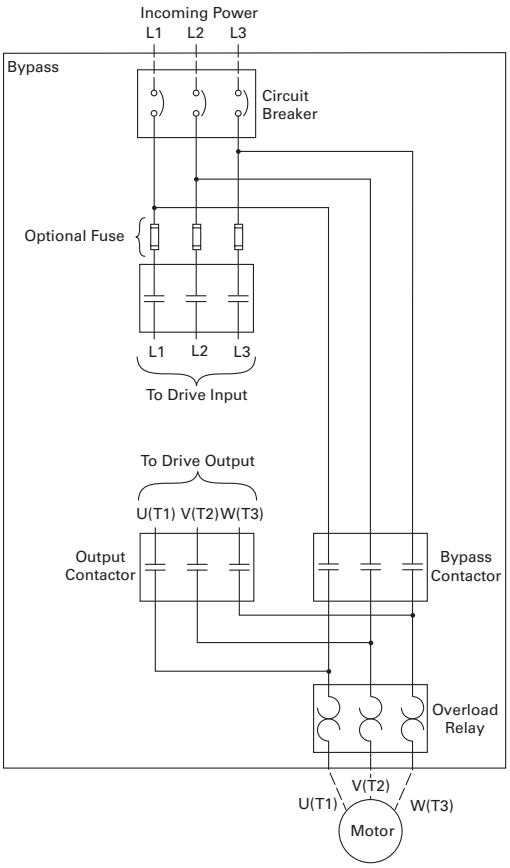

SVX9000 Pump Panel Disconnect Power Wiring

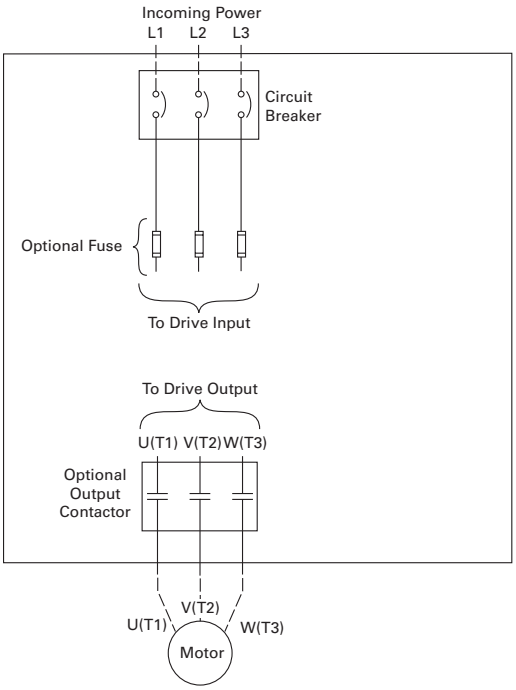

Dimensions

Approximate Dimensions in Inches (mm)

SVX9000 Pump Application Drives

Enclosure Box A NEMA Type 12/IP54

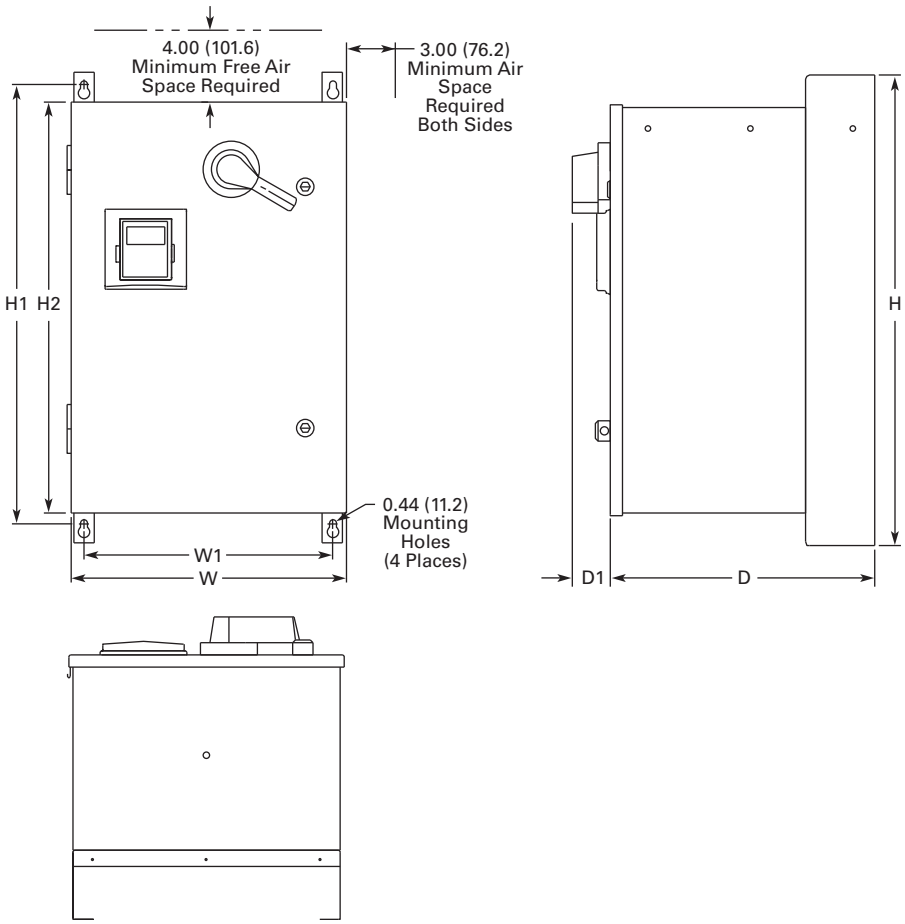

Voltage AC	hp (I_H)	hp (I_L)	H	H1	H2	W	W1	D	D1	Approx. Weight Lbs (kg)	Approx. Shipping Weight Lbs (kg)
Three-Phase											
208V	3/4–10	1–15	29.00 (736.6)	27.00 (685.8)	25.35 (643.9)	16.92 (429.8)	15.30 (388.6)	16.26 (413.0)	2.34 (59.4)	120 (54)	160 (73)
230V	3/4–10	1–15									
480V	1–25	1–30									
Single-Phase											
230V	—	3/4–10	29.00 (736.6)	27.00 (685.8)	25.35 (643.9)	16.92 (429.8)	15.30 (388.6)	16.26 (413.0)	2.34 (59.4)	120 (54)	160 (73)
480V	—	3/4–20									

Approximate Dimensions in Inches (mm)

Enclosure Box B NEMA Type 12/IP54

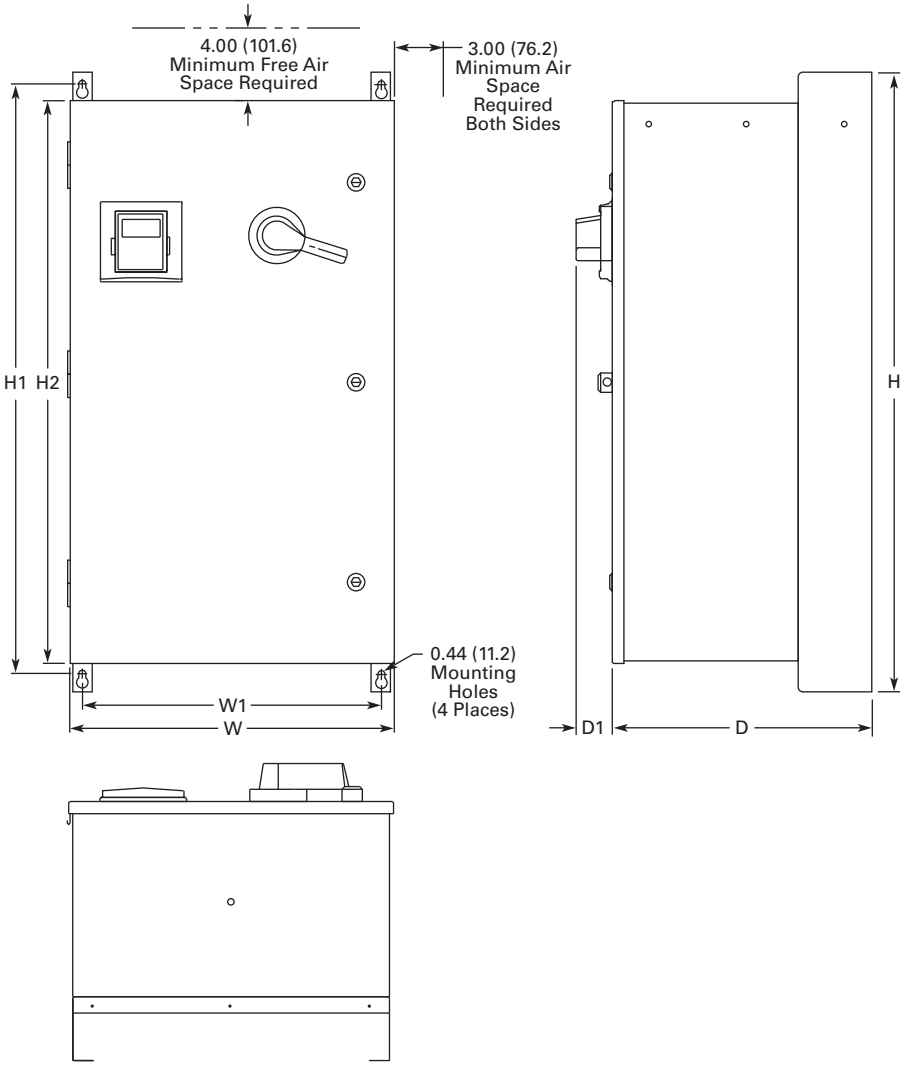

Voltage AC	hp (I_H)	hp (I_L)	H	H1	H2	W	W1	D	D1	Approx. Weight Lbs (kg)	Approx. Shipping Weight Lbs (kg)
Three-Phase											
208V	15–25	20–30	40.00 (1016.0)	38.00 (965.2)	36.35 (923.3)	20.92 (531.4)	19.30 (490.2)	16.76 (425.7)	2.34 (59.4)	185 (84)	229 (104)
230V	15–25	20–30									
480V	30–60	40–75									
Single-Phase											
230V	—	15–20	40.00 (1016.0)	38.00 (965.2)	36.35 (923.3)	20.92 (531.4)	19.30 (490.2)	16.76 (425.7)	2.34 (59.4)	185 (84)	229 (104)
480V	—	25–30									

Approximate Dimensions in Inches (mm)

Enclosure Box C NEMA Type 12/IP54

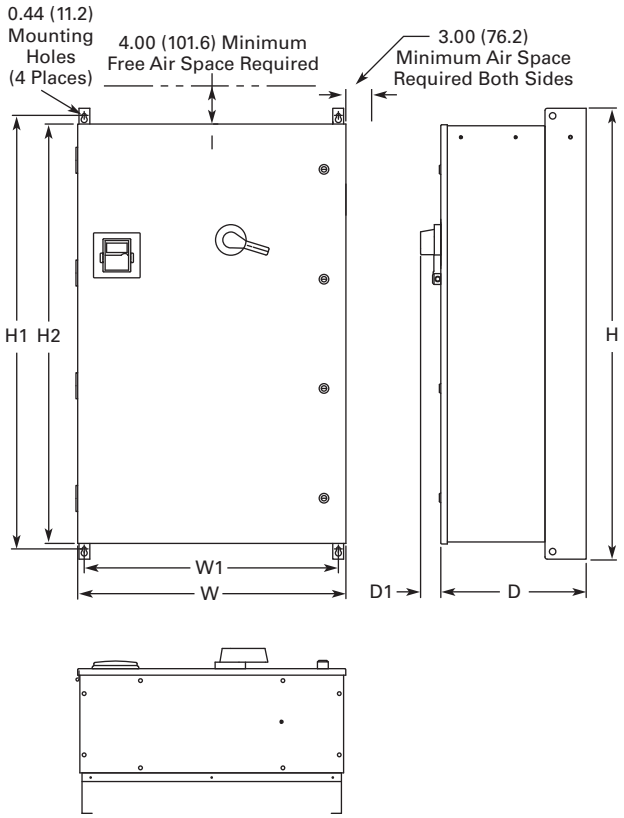

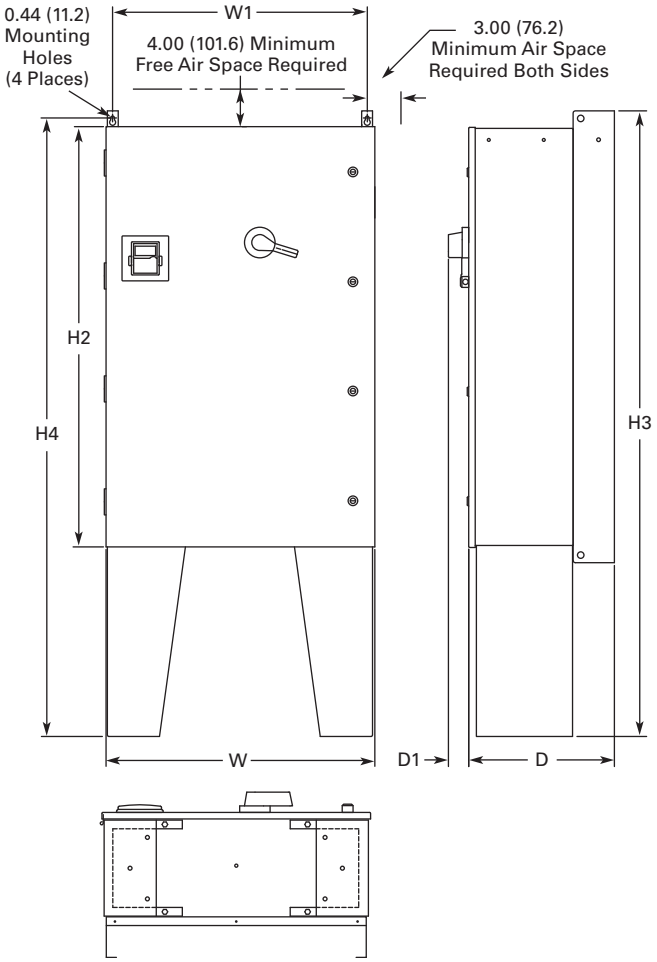

Voltage AC	hp (I_H)	hp (I_L)	H	H1	H2	H3	H4	W	W1	D	D1	Approx. Shipping Weight Lbs (kg)
Three-Phase												
208V	30–50	40–60	52.00 (1320.8)	50.00 (1270.0)	48.35 (1228.1)	72.00 (1828.8)	71.19 (1808.2)	30.92 (785.4)	29.30 (744.2)	16.78 (426.2)	2.34 (59.4)	①
230V	30–50	40–60										
480V	75–125	100–150										
Single-Phase												
230V	—	25–40	52.00 (1320.8)	50.00 (1270.0)	48.35 (1228.1)	72.00 (1828.8)	71.19 (1808.2)	30.92 (785.4)	29.30 (744.2)	16.78 (426.2)	2.34 (59.4)	①
480V	—	40–60										

Note

① Consult factory.

Approximate Dimensions in Inches (mm)

Enclosure Box A NEMA Type 3R

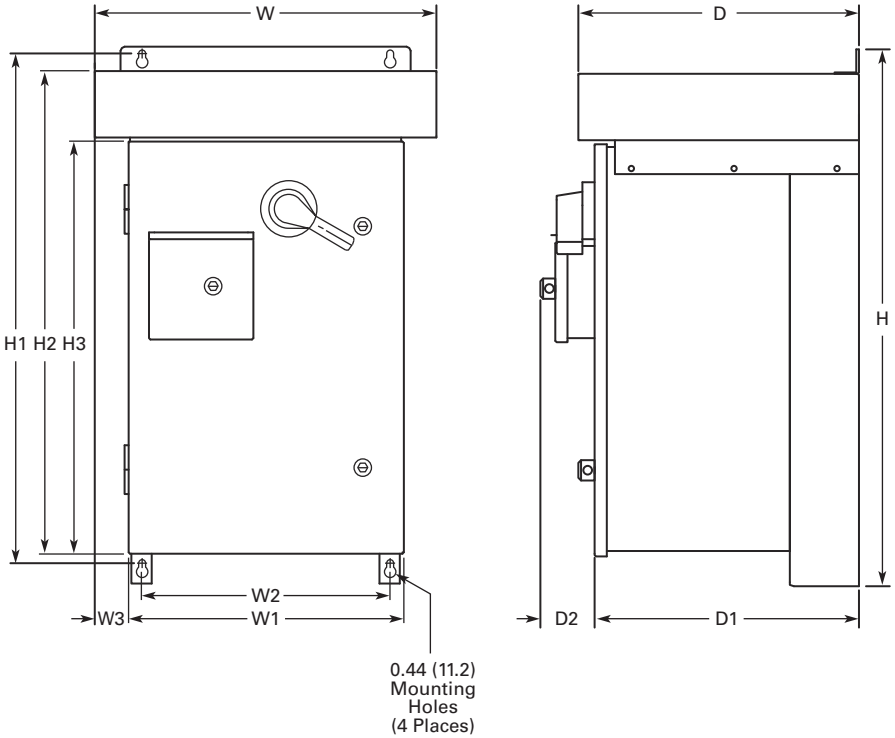

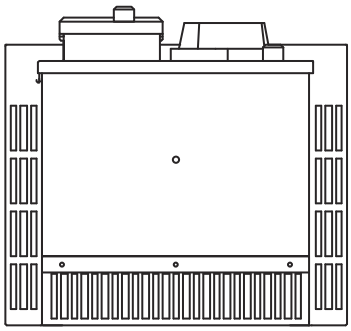

Voltage AC	hp (I_H)	hp (I_L)	H	H1	H2	H3	W	W1	W2	W3	D	D1	D2	Approx. Weight Lbs (kg)	Approx. Shipping Weight Lbs (kg)
Three-Phase															
208V	3/4–10	1–15	33.00 (838.2)	31.36 (796.5)	29.67 (753.6)	25.35 (643.9)	21.05 (534.7)	16.92 (429.8)	15.30 (388.6)	2.07 (52.6)	17.24 (437.9)	16.26 (413.0)	3.31 (840.1)	170 (77)	215 (98)
230V	3/4–10	1–15													
480V	1–25	1–30													
Single-Phase															
230V	—	3/4–10	33.00 (838.2)	31.36 (796.5)	29.67 (753.6)	25.35 (643.9)	21.05 (534.7)	16.92 (429.8)	15.30 (388.6)	2.07 (52.6)	17.24 (437.9)	16.26 (413.0)	3.31 (840.1)	170 (77)	215 (98)
480V	—	3/4–20													

Approximate Dimensions in Inches (mm)

Enclosure Box B NEMA Type 3R

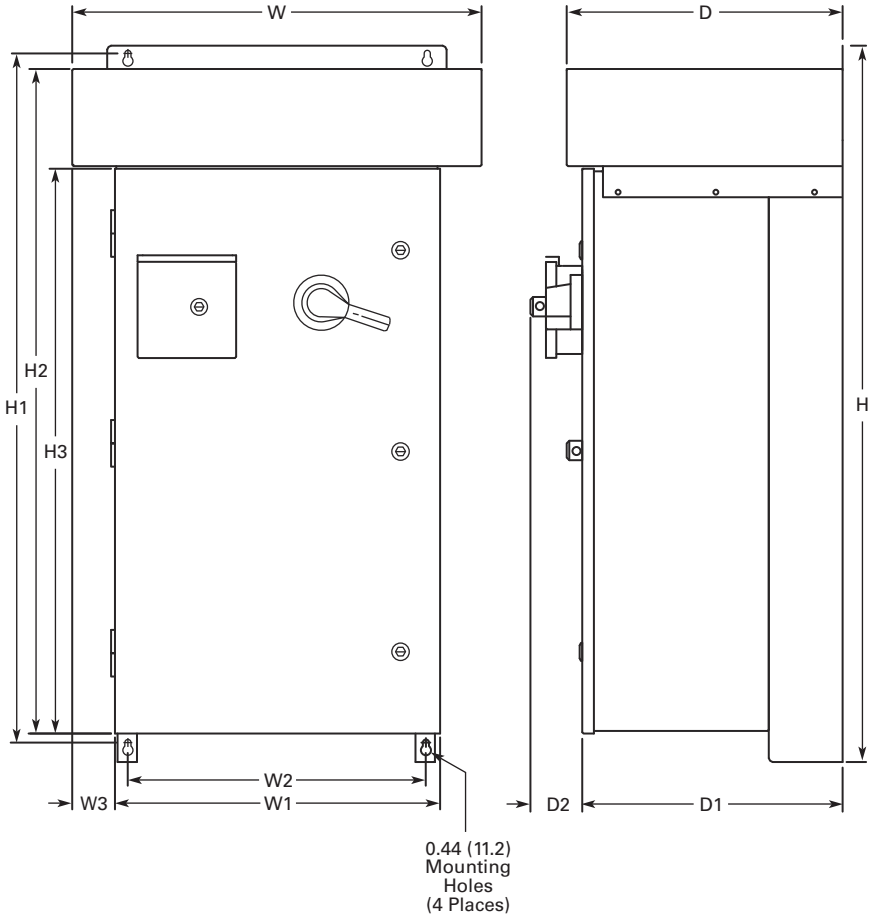

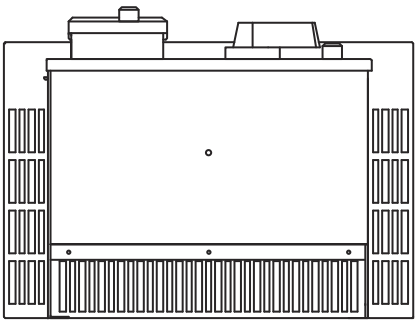

Voltage AC	hp (I_H)	hp (I_L)	H	H1	H2	H3	W	W1	W2	W3	D	D1	D2	Approx. Weight Lbs (kg)	Approx. Shipping Weight Lbs (kg)
Three-Phase															
208V	15–25	20–30	46.09 (1170.7)	44.45 (1129.0)	42.77 (1086.4)	36.35 (923.3)	26.31 (668.3)	20.92 (531.4)	19.30 (490.2)	2.69 (68.3)	17.74 (450.6)	16.76 (425.7)	3.31 (840.1)	235 (107)	290 (132)
230V	15–25	20–30													
480V	30–60	40–75													
Single-Phase															
230V	—	15–20	46.09 (1170.7)	44.45 (1129.0)	42.77 (1086.4)	36.35 (923.3)	26.31 (668.3)	20.92 (531.4)	19.30 (490.2)	2.69 (68.3)	17.74 (450.6)	16.76 (425.7)	3.31 (840.1)	235 (107)	290 (132)
480V	—	25–30													

Approximate Dimensions in Inches (mm)

Enclosure Box C NEMA Type 3R

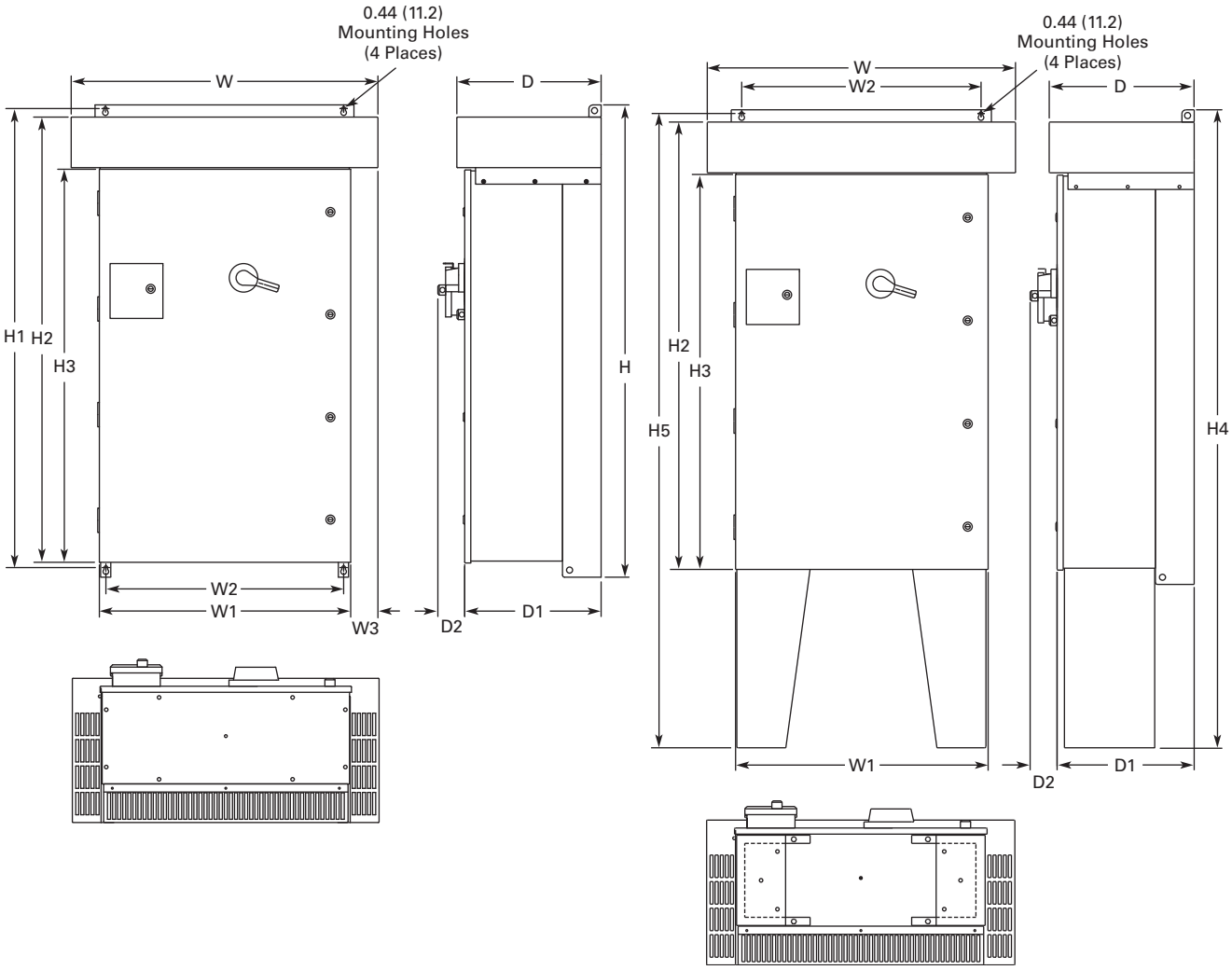

Voltage AC	hp (I_H)	hp (I_L)	H	H1	H2	H3	H4	H5	W	W1	W2	W3	D	D1	D2	Approx. Weight Lbs (kg)
Three-Phase																
208	30–50	40–60	58.09 (1475.5)	56.45 (1433.8)	54.77 (1391.2)	48.35 (1228.1)	78.09 (1983.5)	77.64 (1972.1)	37.73 (958.3)	30.92 (785.4)	29.30 (744.2)	3.34 (84.8)	17.74 (450.6)	16.77 (426.0)	3.31 (840.1)	①
230	30–50	40–60														
480	75–125	100–150														
Single-Phase																
230V	—	25–40	58.09 (1475.5)	56.45 (1433.8)	54.77 (1391.2)	48.35 (1228.1)	78.09 (1983.5)	77.64 (1972.1)	37.73 (958.3)	30.92 (785.4)	29.30 (744.2)	3.34 (84.8)	17.74 (450.6)	16.77 (426.0)	3.31 (840.1)	①
480V	—	40–60														

Note

① Consult factory.

SPX9000 Drives

Contents

Description	*Page*
SPX9000 Drives	
Features and Benefits	**V6-T2-99**
Standards and Certifications	**V6-T2-99**
Catalog Number Selection	**V6-T2-100**
Product Selection	**V6-T2-101**
Accessories	**V6-T2-106**
Options	**V6-T2-107**
Replacement Parts	**V6-T2-112**
Technical Data and Specifications	**V6-T2-120**
Dimensions	**V6-T2-121**

Product Description

The SPX9000 Series Adjustable Frequency Drives from Eaton's electrical sector are specifically designed for high performance applications. Equipped with high processing power, the SPX9000 can use information from an encoder or a resolver in order to provide very precise motor control. Sensorless vector and simple frequency control are also supported. Typical applications requiring high performance are: master-slave drives, positioning applications, winder tension control and synchronization.

The core of the SPX9000 is a fast microprocessor, providing high dynamic performance for applications where good motor handling and reliability are required. It can be used both in open loop applications as well as in applications requiring encoder feedback.

The SPX9000 supports fast drive-to-drive communication. It also offers an integrated data logger functionality for analysis of dynamic events without the need of additional hardware. Simultaneous fast monitoring of several drives can be done by using the 9000Xdrive tool and CAN communication. In applications where reliability and quality are essential for high-performance, the SPX9000 is the logical choice.

The Eaton family of drives includes HVX9000, H-Max, M-Max, SVX9000, SLX9000 and SPX9000. 9000X Series drive ratings are rated for either high overload (I_H) or low overload (I_L). I_L indicates 110% overload capacity for 1 minute out of 10 minutes. I_H indicates 150% overload capacity for 1 minute out of 10 minutes.

Features and Benefits

- Speed error <0.01%, depending on the encoder
- Incremental or absolute encoder support
- Encoder voltages of 5V (RS-422), 15V or 24V, depending on the option card
- Full torque control at all speeds, including zero
- Torque accuracy <2%; <5% down to zero speed
- Starting torque >200%, depending on motor and drive sizing
- Integrated datalogger for system analysis
- Fast multiple drive monitoring with PC
- Full capability for master/slave configurations
- High-speed bus (12 Mbit/s) for fast inter-drive communication
- High-speed applications (up to 7200 Hz) possible
- Robust design—proven 500,000 hours MTBF
- Integrated 3% line reactors standard on drives from FR4 through FR9
- Line reactor is included but is separated from chassis
- EMI/RFI Filters H standard up to 200 hp I_H 480V, 100 hp I_H 230V
- Simplified operating menu allows for typical programming changes, while programming mode provides control of everything
- Quick Start Wizard built into the programming of the drive ensures a smooth start-up
- Keypad can display up to three monitored parameters simultaneously
- LOCAL/REMOTE operation from keypad
- Copy/paste function allows transfer of parameter settings from one drive to the next
- Standard NEMA Type 12/IP54 keypad on all drives
- Hand-held auxiliary 240 power supply allows programming/monitoring of control module without applying full power to the drive
- The SPX can be flexibly adapted to a variety of needs using our pre-installed "Seven in One" precision application programs consisting of:
  - Basic
  - Standard
  - Local/remote
  - Multi-step speed control
  - PID control
  - Multi-purpose control
  - Pump and fan control with auto change
- Additional I/O and communication cards provide plug and play functionality
- I/O connections with simple quick connection terminals
- Control logic can be powered from an external auxiliary control panel, internal drive functions and fieldbus if necessary
- Brake chopper standard from: 1–30 hp/380–500V 3/4–15 hp/208–230V
- NEMA Type 1/IP21 enclosures available Frame Sizes FR4–FR11, NEMA Type 12/IP54 enclosures available Frame Sizes FR4–FR10 (FR10 and FR11 freestanding drives)
- Open chassis FR10 and greater
- Standard option board configuration includes an A9 I/O board and an A2 relay output board installed in slots A and B

Standards and Certifications

Product

- IEC 61800-2

Safety

- UL 508C

EMC (at default settings)

- Immunity: Fulfills all EMC immunity requirements; Emissions: EN 61800-3, LEVEL H
- UL Listed

Listed

Catalog Number Selection

SPX9000 Adjustable Frequency Drives

SPX 010 A 1 – 4 A 1 B 1 _ _ _ _ _ _

Product Family

SPX = Open drives

Horsepower Rating

F07 =3/4	**125** =125
001 = 1	**150** =150
F15 =1-1/2	**250** =250
002 = 2	**300** =300
003 = 3	**350** =350
004 =5 (I_L)	**400** =400
005 = 5	**500** =500
006 =7-1/2 (I_L)	**550** =550
007 =7-1/2	**600** =600
010 =10	**650** =650
015 =15	**700** =700
020 =20	**800** =800
025 =25	**900** =900
030 =30	**H10** =1000
040 =40	**H12** =1200
050 =50	**H13** =1350
060 =60	**H15** =1500
075 =75	**H16** =1600
100 =100	**H20** =2000

AFD Software Series

A = Standard software

Enclosure ③

0 = Chassis
1 = NEMA Type 1/IP21
2 = NEMA Type 12/IP54

Voltage Rating

2 = 230 (208–240) V
4 = 480 (380–500) V
5 = 575 (525–690) V

Keypad

A = Alphanumeric

Options

Options appear in alphabetical order.

Extended I/O Card Options

A3 = 2 RO, Therm
A4 = Encoder low volt +5V/15V24V
A5 = Encoder high volt +15V/24V
A7 = Double Encoder
A8 = 6 DI, 1 DO, 2 AI, 1AO
AE = 3 DI (Encoder 10–24V), Out +15V/+24V 2 DO (pulse + direction)
B1 = 6 DI, 1 ext +24 Vdc/EXT +24 Vdc
B2 = 1 RO (NC-NO), 1 RO (NO), 1 therm
B4 = 1 AI (mA isolated), 2 AO (mA isolated), 1 ext +24 Vdc/EXT + 24 Vdc
B5 = 3 RO (NO)
B8 = 1 ext +24 Vdc/EXT +24 Vdc, 3 Pt100
B9 = 1 RO (NO), 5 DI 42–240 Vac input
BB = SPI, absolute encoder

Communication Cards

CA = Johnson Controls N2	**C5** = Profibus DP (D9 connector)
CI = Modbus TCP	**C6** = CANopen (slave)
CJ = BACnet	**C7** = DeviceNet
CK = Ethernet IP	**C8** = Modbus (D9 type connector)
C2 = Modbus	**D1** = Adapter—SPX only
C3 = Profibus DP	**D2** = Adapter—SPX only
C4 = LonWorks	**D3** = RS-232 with D9 connection

Board Modifications

1 = Standard boards
2 = Conformal (varnished) coating ④

Brake Chopper Options ②

N = No brake chopper circuit
B = Internal brake chopper circuit

Input Options ①

1 = Three-phase, EMC H
2 = Three-phase, EMC N
4 = Three-phase, EMC L

Power Module

FR10 – 000 – 4 – A N S

Frame Code

Horsepower

Example: **150** = 150 hp
(See chart above)

Voltage

4 = 380–500V
5 = 525–690V

Cooling Type

A = Air

Brake Option

N = No brake chopper
B = Brake chopper

Varnishing

S = Standard **V** = Varnished

Notes

① All 230V drives and 480V drives up to 200 hp (I_H) are only available with input option **1** (EMC level H)**.** 480V drives 250 hp (I_H) or larger are available with input option **2** (EMC level N). 575V drives 200 hp (I_H) or larger are available with input option **2**. 575V drives up to 150 hp (I_H) are available with input option **4** (EMC level L). 480V and 690V freestanding drives are available with input option **4** (EMC level L).

② 480V drives up to 30 hp (I_H) are only available with brake chopper option **B**. 480V drives 40 hp (I_H) or larger come standard with brake chopper option **N**. 230V drives up to 15 hp (I_H) are only available with brake chopper option **B**. 230V drives 20 hp and larger come standard with brake chopper option **N**. All 575V drives come standard without brake chopper option (**N**). **N** = **No** brake chopper.

③ 480V drives 250–350 hp (I_H) and 690V drives 200–300 hp (I_H) are available with enclosure style **0** (chassis). 480V and 690V FR10 freestanding drives are available with **1** (NEMA Type 1/IP21) or **2** (NEMA Type 12/IP54). FR11 freestanding drives are only available with enclosure style **1** (NEMA Type 1/IP21).

④ Factory promise delivery. Consult sales office for availability.

Product Selection

230V Drives

SPX9000 Open Drives

208–240V, NEMA Type 1/IP21 Drives

Frame Size	Delivery Code	hp (I_H)	Current (I_H)	hp (I_L)	Current (I_L)	Catalog Number
FR4	FP	3/4	3.7	1	4.8	**SPXF07A1-2A1B1**
		1	4.8	1-1/2	6.6	**SPX001A1-2A1B1**
		1-1/2	6.6	2	7.8	**SPXF15A1-2A1B1**
		2	7.8	3	11	**SPX002A1-2A1B1**
		3	11	—	12.5	**SPX003A1-2A1B1**
FR5	FP	—	12.5	5	17.5	**SPX004A1-2A1B1**
		5	17.5	7-1/2	25	**SPX005A1-2A1B1**
		7-1/2	25	10	31	**SPX007A1-2A1B1**
FR6	FP	10	31	15	48	**SPX010A1-2A1B1**
		15	48	20	61	**SPX015A1-2A1B1**
FR7	FP	20	61	25	75	**SPX020A1-2A1N1**
		25	75	30	88	**SPX025A1-2A1N1**
		30	88	40	114	**SPX030A1-2A1N1**
FR8	FP	40	114	50	140	**SPX040A1-2A1N1**
		50	140	60	170	**SPX050A1-2A1N1**
		60	170	75	205	**SPX060A1-2A1N1**
FR9	FP	75	205	100	261	**SPX075A1-2A1N1**
		100	261	—	—	**SPX100A1-2A1N1**

208–240V, NEMA Type 12/IP54 Drives

Frame Size	Delivery Code	hp (I_H)	Current (I_H)	hp (I_L)	Current (I_L)	Catalog Number
FR4	FP	3/4	3.7	1	4.8	**SPXF07A2-2A1B1**
		1	4.8	1-1/2	6.6	**SPX001A2-2A1B1**
		1-1/2	6.6	2	7.8	**SPXF15A2-2A1B1**
		2	7.8	3	11	**SPX002A2-2A1B1**
		3	11	—	12.5	**SPX003A2-2A1B1**
FR5	FP	—	12.5	5	17.5	**SPX004A2-2A1B1**
		5	17.5	7-1/2	25	**SPX005A2-2A1B1**
		7-1/2	25	10	31	**SPX007A2-2A1B1**
FR6	FP	10	31	15	48	**SPX010A2-2A1B1**
		15	48	20	61	**SPX015A2-2A1B1**
FR7	FP	20	61	25	75	**SPX020A2-2A1N1**
		25	75	30	88	**SPX025A2-2A1N1**
		30	88	40	114	**SPX030A2-2A1N1**
FR8	FP	40	114	50	140	**SPX040A2-2A1N1**
		50	140	60	170	**SPX050A2-2A1N1**
		60	170	75	205	**SPX060A2-2A1N1**
FR9	FP	75	205	100	261	**SPX075A2-2A1N1**
		100	261	—	—	**SPX100A2-2A1N1**

480V Drives

SPX9000 Open Drives

380–500V, NEMA Type 1/IP21 Drives

Frame Size	Delivery Code	hp (I_H)	Current (I_H)	hp (I_L)	Current (I_L)	Catalog Number
FR4	W	1	2.2	1-1/2	3.3	**SPX001A1-4A1B1**
	FP	1-1/2	3.3	2	4.3	**SPXF15A1-4A1B1**
	FP	2	4.3	3	5.6	**SPX002A1-4A1B1**
	W	3	5.6	5	7.6	**SPX003A1-4A1B1**
	W	5	7.6	—	9	**SPX005A1-4A1B1**
	FP	—	9	7-1/2	12	**SPX006A1-4A1B1**
FR5	W	7-1/2	12	10	16	**SPX007A1-4A1B1**
		10	16	15	23	**SPX010A1-4A1B1**
		15	23	20	31	**SPX015A1-4A1B1**
FR6	W	20	31	25	38	**SPX020A1-4A1B1**
		25	38	30	46	**SPX025A1-4A1B1**
		30	46	40	61	**SPX030A1-4A1B1**
FR7	FP	40	61	50	72	**SPX040A1-4A1N1**
	W	50	72	60	87	**SPX050A1-4A1N1**
	W	60	87	75	105	**SPX060A1-4A1N1**
FR8	FP	75	105	100	140	**SPX075A1-4A1N1**
	W	100	140	125	170	**SPX100A1-4A1N1**
	W	125	170	150	205	**SPX125A1-4A1N1**
FR9	W	150	205	200	261	**SPX150A1-4A1N1**
		200	245	250	300	**SPX200A1-4A1N1**

380–500V, NEMA Type 1/IP21 Freestanding Drives

Frame Size	Delivery Code	hp (I_H)	Current (I_H)	hp (I_L)	Current (I_L)	Catalog Number
FR10	W	250	330	300	385	**SPX250A1-4A4N1**
	FP	300	385	350	460	**SPX300A1-4A4N1**
	W	350	460	400	520	**SPX350A1-4A4N1**
FR11	FP	400	520	500	590	**SPX400A1-4A4N1**
	FP	500	590	550	650	**SPX500A1-4A4N1**
	FP	550	650	600	730	**SPX550A1-4A4N1**

Note

Integrated fuses as standard. Limited option selection available; 115V transformer (KB), light kit (L1), HOA (K4), speed potentiometer w/HOA (K2), Disconnect switch (P2). See Freestanding Option selection on **Page V6-T2-111**.

SPX9000 Open Drives

380–500V, NEMA Type 12/IP54 Drives

Frame Size	Delivery Code	hp (I_H)	Current (I_H)	hp (I_L)	Current (I_L)	Catalog Number
FR4	W	1	2.2	1-1/2	3.3	**SPX001A2-4A1B1**
	FP	1-1/2	3.3	2	4.3	**SPXF15A2-4A1B1**
	FP	2	4.3	3	5.6	**SPX002A2-4A1B1**
	W	3	5.6	5	7.6	**SPX003A2-4A1B1**
	W	5	7.6	—	9	**SPX005A2-4A1B1**
	FP	—	9	7-1/2	12	**SPX006A2-4A1B1**
FR5	W	7-1/2	12	10	16	**SPX007A2-4A1B1**
		10	16	15	23	**SPX010A2-4A1B1**
		15	23	20	31	**SPX015A2-4A1B1**
FR6	W	20	31	25	38	**SPX020A2-4A1B1**
		25	38	30	46	**SPX025A2-4A1B1**
		30	46	40	61	**SPX030A2-4A1B1**
FR7	FP	40	61	50	72	**SPX040A2-4A1N1**
		50	72	60	87	**SPX050A2-4A1N1**
		60	87	75	105	**SPX060A2-4A1N1**
FR8	FP	75	105	100	140	**SPX075A2-4A2N1**
		100	140	125	170	**SPX100A2-4A1N1**
		125	170	150	205	**SPX125A2-4A1N1**
FR9	FP	150	205	200	261	**SPX150A2-4A1N1**
		200	245	250	300	**SPX200A2-4A1N1**

380–500V, NEMA Type 12/IP54 Freestanding Drives

Frame Size	Delivery Code	hp (I_H)	Current (I_H)	hp (I_L)	Current (I_L)	Catalog Number
FR10	FP	250	330	300	385	**SPX250A2-4A4N1**
	FP	300	385	350	460	**SPX300A2-4A4N1**
	FP	350	460	400	520	**SPX350A2-4A4N1**

380–500V, Open Chassis Drives

Frame Size ①	Delivery Code	hp (I_H)	Current (I_H)	hp (I_L)	Current (I_L)	Catalog Number
FR10	W	250	330	300	385	**SPX250A0-4A2N1**
		300	385	—	460	**SPX300A0-4A2N1**
		350	460	400	520	**SPX350A0-4A2N1**
FR11	FP	400	520	500	590	**SPX400A0-4A2N1**
		500	590	—	650	**SPX500A0-4A2N1**
		—	650	600	730	**SPX550A0-4A2N1**
FR12	FP	600	730	—	820	**SPX600A0-4A2N1**
		—	820	700	920	**SPX650A0-4A2N1**
		700	920	800	1030	**SPX700A0-4A2N1**
FR13	FP	800	1030	900	1150	**SPX800A0-4A2N1**
		900	1150	1000	1300	**SPX900A0-4A2N1**
		1000	1300	1200	1450	**SPXH10A0-4A2N1**
FR14	FP	1200	1600	1500	1770	**SPXH12A0-4A2N1**
		1600	1940	1800	2150	**SPXH16A0-4A2N1**

Notes

Integrated fuses as standard. Limited option selection available; 115V transformer (KB), light kit (L1), HOA (K4), speed potentiometer w/HOA (K2), disconnect switch (P2). See Freestanding Option selection on **Page V6-T2-111**.

① FR10–FR14 includes 3% line reactor, but it is not integral to chassis.

575V Drives

SPX9000 Open Drives

525–690V, NEMA Type 1/IP21 Drives

Frame Size	Delivery Code	hp (I_H)	Current (I_H)	hp (I_L)	Current (I_L)	Catalog Number
FR6	W	2	3.3	3	4.5	**SPX002A1-5A4N1**
		3	4.5	—	5.5	**SPX003A1-5A4N1**
		—	5.5	5	7.5	**SPX004A1-5A4N1**
		5	7.5	7-1/2	10	**SPX005A1-5A4N1**
		7-1/2	10	10	13.5	**SPX007A1-5A4N1**
		10	13.5	15	18	**SPX010A1-5A4N1**
		15	18	20	22	**SPX015A1-5A4N1**
		20	22	25	27	**SPX020A1-5A4N1**
		25	27	30	34	**SPX025A1-5A4N1**
FR7	W	30	34	40	41	**SPX030A1-5A4N1**
		40	41	50	52	**SPX040A1-5A4N1**
FR8	W	50	52	60	62	**SPX050A1-5A4N1**
		60	62	75	80	**SPX060A1-5A4N1**
		75	80	100	100	**SPX075A1-5A4N1**
FR9	W	100	100	125	125	**SPX100A1-5A4N1**
		125	125	150	144	**SPX125A1-5A4N1**
		150	144	—	170	**SPX150A1-5A4N1**
		—	170	200	208	**SPX175A1-5A4N1**

525–690V, NEMA Type 1/IP21 Freestanding Drives

Frame Size	Delivery Code	hp (I_H)	Current (I_H)	hp (I_L)	Current (I_L)	Catalog Number
FR10	FP	200	208	250	261	**SPX200A1-5A4N1**
		250	261	300	325	**SPX250A1-5A4N1**
		300	325	400	385	**SPX300A1-5A4N1**
FR11	FP	400	385	450	460	**SPX400A1-5A4N1**
		450	460	500	502	**SPX450A1-5A4N1**
		500	502	550	590	**SPX500A1-5A4N1**

Note

Integrated fuses as standard. Limited option selection available; 115V transformer (KB), light kit (L1), HOA (K4), speed potentiometer w/HOA (K2), disconnect switch (P2). See Freestanding Option selection on **Page V6-T2-111**.

SPX9000 Open Drives

525–690V, NEMA Type 12/IP54 Drives

Frame Size	Delivery Code	hp (I_H)	Current (I_H)	hp (I_L)	Current (I_L)	Catalog Number
FR6	F1	2	3.3	3	4.5	**SPX002A2-5A4N1**
		3	4.5	—	5.5	**SPX003A2-5A4N1**
		—	5.5	5	7.5	**SPX004A2-5A4N1**
		5	7.5	7-1/2	10	**SPX005A2-5A4N1**
		7-1/2	10	10	13.5	**SPX007A2-5A4N1**
		10	13.5	15	18	**SPX010A2-5A4N1**
		15	18	20	22	**SPX015A2-5A4N1**
		20	22	25	27	**SPX020A2-5A4N1**
		25	27	30	34	**SPX025A2-5A4N1**
FR7	FP	30	34	40	41	**SPX030A2-5A4N1**
		40	41	50	52	**SPX040A2-5A4N1**
FR8	FP	50	52	60	62	**SPX050A2-5A4N1**
		60	62	75	80	**SPX060A2-5A4N1**
		75	80	100	100	**SPX075A2-5A4N1**
FR9	FP	100	100	125	125	**SPX100A2-5A4N1**
		125	125	150	144	**SPX125A2-5A4N1**
		150	144	—	170	**SPX150A2-5A4N1**
		—	170	200	208	**SPX175A2-5A4N1**

525–690V, NEMA Type 12/IP54 Freestanding Drives

Frame Size	Delivery Code	hp (I_H)	Current (I_H)	hp (I_L)	Current (I_L)	Catalog Number
FR10	FP	200	208	250	261	**SPX200A2-5A4N1**
		250	261	300	325	**SPX250A2-5A4N1**
		300	325	400	385	**SPX300A2-5A4N1**

525–690V, Open Chassis Drives

Frame Size ①	Delivery Code	hp (I_H)	Current (I_H)	hp (I_L)	Current (I_L)	Catalog Number
FR10	FP	200	208	250	261	**SPX200A0-5A2N1**
		250	261	300	325	**SPX250A0-5A2N1**
		300	325	400	385	**SPX300A0-5A2N1**
FR11	FP	400	385	450	460	**SPX400A0-5A2N1**
		450	460	500	502	**SPX450A0-5A2N1**
		500	502	—	590	**SPX500A0-5A2N1**
FR12	FP	—	590	600	650	**SPX550A0-5A2N1**
		600	650	700	750	**SPX600A0-5A2N1**
		700	750	800	820	**SPX700A0-5A2N1**
FR13	FP	800	820	900	920	**SPX800A0-5A2N1**
		900	920	1000	1030	**SPX900A0-5A2N1**
		1000	1030	1250	1180	**SPXH10A0-5A2N1**
FR14	FP	1350	1300	1500	1500	**SPXH13A0-5A2N1**
		1500	1500	2000	1900	**SPXH15A0-5A2N1**
		2000	1900	2300	2250	**SPXH20A0-5A2N1**

Notes

Integrated fuses as standard. Limited option selection available; 115V transformer (KB), light kit (L1), HOA (K4), speed potentiometer w/HOA (K2), disconnect switch (P2). See Freestanding Option selection on **Page V6-T2-111**.

① FR10–FR14 includes 3% line reactor, but it is not integral to chassis.

Accessories

Demo Drive and Power Supply

Demo Drive and Power Supply

Description	Catalog Number
9000X demo drive	**9000XDEMO**
Hand-held 24V auxiliary power supply—Used to supply power to the control module in order to perform keypad programming before the drive is connected to line voltage	**9000XAUX24V**

NEMA Type 12/IP54 Conversion Kit

The NEMA Type 12/IP54 kit option is used to convert a NEMA Type 1/IP21 to a NEMA Type 12/IP54 drive. The NEMA Type 12/IP54 kit consists of a metal drive shroud, fan kit for some frames, adaptor plate and plugs.

NEMA Type 12/IP54 Conversion Kit

Frame Size	Delivery Code	Approximate Dimensions in Inches (mm) Length	Width	Height	Approximate Weight Lb (kg)	Catalog Number
FR4	W	13 (330)	7 (178)	4 (102)	4 (1.8)	**OPTN12FR4**
FR5		16 (406)	8 (203)	7 (178)	5 (2.3)	**OPTN12FR5**
FR6		21 (533)	10 (254)	5 (127)	7 (3.2)	**OPTN12FR6**

Flange Kits

Flange Kit NEMA Type 12/IP54

The flange kit is utilized when the power section is mounted through the back panel of an enclosure. Includes flange mount brackets and NEMA Type 12/IP54 fan components. Metal shroud not included.

Flange kits for NEMA Type 12/IP54 enclosure drive rating are determined by rating of drive.

Flange Kit NEMA Type 12/IP54— Frames 4, 5 and 6 ①

Frame Size	Delivery Code	Catalog Number
FR4	W	**OPTTHRFR4**
FR5		**OPTTHRFR5**
FR6		**OPTTHRFR6**

Flange Kit NEMA Type 12/IP54—Frames 4–9 ①

Frame Size	Delivery Code	Catalog Number
FR4	FP	**OPTTHR4**
FR5		**OPTTHR5**
FR6		**OPTTHR6**
FR7		**OPTTHR7**
FR8		**OPTTHR8**
FR9		**OPTTHR9**

Flange Kit NEMA Type 1/IP21

Flange kits for NEMA Type 1/IP21 enclosure drive rating are determined by rating of drive.

Flange Kit NEMA Type 1/IP21—Frames 4–9 ①

Frame Size	Delivery Code	Catalog Number
FR4	FP	**OPTTHR4**
FR5		**OPTTHR5**
FR6		**OPTTHR6**
FR7		**OPTTHR7**
FR8		**OPTTHR8**
FR9		**OPTTHR9**

Note

① For installation of an SPX9000 NEMA Type 1/IP21 drive into a NEMA Type 12/IP54 oversized enclosure.

Options

9000X Series Option Board Kits

The 9000X Series drives can accommodate a wide selection of expander and adapter option boards to customize the drive for your application needs. The drive's control unit is designed to accept a total of five option boards.

The 9000X Series factory installed standard board configuration includes an A9 I/O board and an A2 relay output board, which are installed in slots A and B.

Option Boards

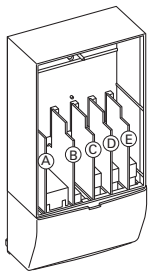

Option Board Kits

Option Kit Description ①	Allowed Slot Locations ②	Field Installed Catalog Number	Factory Installed Option Designator	SVX Ready Programs Basic	Local/ Remote	Standard	MSS	PID	Multi-P.	PFC
Standard I/O Cards										
2 RO (NC-NO)	B	**OPTA2**	—	■	■	■	■	■	■	■
6 DI, 1 DO, 2 AI, 1AO, 1 +10 Vdc ref, 2 ext +24 Vdc/EXT +24 Vdc	A	**OPTA9**	—	■	■	■	■	■	■	■
Extended I/O Cards										
2 RO, therm	B	**OPTA3**	**A3**	—	■	■	■	■	■	■
Encoder low volt +5V/15V/24V	C	**OPTA4**	**A4**	—	■	■	■	■	■	■
Encoder high volt +15V/24V	C	**OPTA5**	**A5**	—	■	■	■	■	■	■
Double encoder—SPX only	C	**OPTA7**	**A7**	■	■	■	■	■	■	■
6 DI, 1 DO, 2 AI, 1 AO	A	**OPTA8**	**A8**	—	■	■	■	■	■	■
6 DI, 1 DO, 2 AI, 1AO, 1 +10 Vdc ref, 2 ext +24 Vdc/EXT +24 Vdc	A	**OPTA1**	—	■	■	■	■	■	■	■
3 DI (encoder 10–24V), out +15V/+24V, 2 DO (pulse+direction)—SPX only	C	**OPTAE**	**AE**	■	■	■	■	■	■	■
6 DI, 1 DO, 2 AI, 1AO, 1 +10 Vdc ref, 2 ext +24 Vdc/EXT +24 Vdc	A	**OPTAFA1**	—	■	■	■	■	■	■	■
6 DI, 1 ext +24 Vdc/EXT +24 Vdc	B, C, **D**, E	**OPTB1**	**B1**	—	—	—	—	—	■	■
1 RO (NC-NO), 1 RO (NO), 1 therm	B, C, **D**, E	**OPTB2**	**B2**	—	—	—	—	—	■	■
1 AI (mA isolated), 2 AO (mA isolated), 1 ext +24 Vdc/EXT +24 Vdc	B, C, **D**, E	**OPTB4**	**B4**	—	■	■	■	■	■	■
3 RO (NO)	B, C, **D**, E	**OPTB5**	**B5**	—	—	—	—	—	■	■
1 ext +24 Vdc/EXT +24 Vdc, 3 Pt100	B, C, **D**, E	**OPTB8**	**B8**	—	—	—	—	—	—	—
1 RO (NO), 5 DI 42–240 Vac input	B, C, **D**, E	**OPTB9**	**B9**	—	—	—	—	—	■	■
SPI, absolute encoder	C	**OPTBB**	**BB**	—	—	—	—	—	—	—

Notes

① AI = Analog Input; AO = Analog Output, DI = Digital Input, DO = Digital Output, RO = Relay Output

② Option card must be installed in one of the slots listed for that card. Slot indicated in bold is the preferred location.

Option Boards

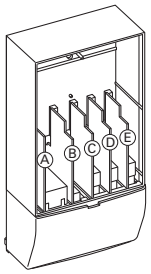

Option Board Kits, continued

Option Kit Description ①	Allowed Slot Locations ②	Field Installed Catalog Number	Factory Installed Option Designator	SVX Ready Programs Basic	Local/ Remote	Standard	MSS	PID	Multi-P.	PFC
Communication Cards ③										
Modbus	D, **E**	**OPTC2**	**C2**	■	■	■	■	■	■	■
Johnson Controls N2	D, **E**	**OPTC2**	**CA**	—	—	—	—	—	—	—
Modbus TCP	D, **E**	**OPTCI**	**CI**	■	■	■	■	■	■	■
BACnet	D, **E**	**OPTCJ**	**CJ**	■	■	■	■	■	■	■
Ethernet IP	D, **E**	**OPTCK**	**CK**	■	■	■	■	■	■	■
Profibus DP	D, **E**	**OPTC3**	**C3**	■	■	■	■	■	■	■
LonWorks	D, **E**	**OPTC4**	**C4**	■	■	■	■	■	■	■
Profibus DP (D9 connector)	D, **E**	**OPTC5**	**C5**	■	■	■	■	■	■	■
CanOpen (slave)	D, **E**	**OPTC6**	**C6**	■	■	■	■	■	■	■
DeviceNet	D, **E**	**OPTC7**	**C7**	■	■	■	■	■	■	■
Modbus (D9 type connector)	D, **E**	**OPTC8**	**C8**	■	■	■	■	■	■	■
Adapter—SPX only	D, **E**	**OPTD1**	**D1**	■	■	■	■	■	■	■
Adapter—SPX only	D, **E**	**OPTD2**	**D2**	■	■	■	■	■	■	■
RS-232 with D9 connection	D, **E**	**OPTD3**	**D3**	■	■	■	■	■	■	■
Keypad										
9000X Series local/remote keypad (replacement keypad)	—	**KEYPAD-LOC/REM**	**—**	—	—	—	—	—	—	■
9000X Series remote mount keypad unit (keypad not included, includes 10 ft cable, keypad holder, mounting hardware)	—	**OPTRMT-KIT-9000X**	**—**	—	—	—	—	—	—	—
9000X Series RS-232 cable, 13 ft	—	**PP00104**	**—**	—	—	—	—	—	—	—

Notes

① AI = Analog Input; AO = Analog Output, DI = Digital Input, DO = Digital Output, RO = Relay Output

② Option card must be installed in one of the slots listed for that card. Slot indicated in bold is the preferred location.

③ OPTC2 is a multi-protocol option card.

Modbus RTU Network Communications

The Modbus Network Card OPTC2 is used for connecting the 9000X Drive as a slave on a Modbus network. The interface is connected by a 9-pin DSUB connector (female) and the baud rate ranges from 300 to 19200 baud. Other communication parameters include an address range from 1 to 247; a parity of None, Odd or Even; and the stop bit is 1.

PROFIBUS Network Communications

The PROFIBUS Network Card OPTC3 is used for connecting the 9000X Drive as a slave on a PROFIBUS-DP network. The interface is connected by a 9-pin DSUB connector (female). The baud rates range from 9.6K baud to 12M baud, and the addresses range from 1 to 127.

LonWorks Network Communications

The LonWorks Network Card OPTC4 is used for connecting the 9000X Drive on a LonWorks network. This interface uses Standard Network Variable Types (SNVT) as data types. The channel connection is achieved using a FTT-10A Free Topology transceiver via a single twisted transfer cable. The communication speed with LonWorks is 78 kBits/s.

CANopen (Slave) Communications

The CANopen (Slave) Network Card OPTC6 is used for connecting the 9000X Drive to a host system. According to ISO11898 standard cables to be chosen for CAN bus should have a nominal impedance of 120 ohms, and specific line delay of nominal 5 nS/m. 120 ohms line termination resistors required for installation.

DeviceNet Network Communications

The DeviceNet Network Card OPTC7 is used for connecting the 9000X Drive on a DeviceNet Network. It includes a 5.08 mm pluggable connector. Transfer method is via CAN using a two-wire twisted shielded cable with two-wire bus power cable and drain. The baud rates used for communication include 125K baud, 250K baud and 500K baud.

Johnson Controls Metasys N2 Network Communications

The OPTC2 fieldbus board provides communication between the 9000X Drive and a Johnson Controls Metasys™ N2 network. With this connection, the drive can be controlled, monitored and programmed from the Metasys system. The N2 fieldbus is available as a factory installed option and as a field installable kit.

Modbus/TCP Network Communications

The Modbus/TCP Network Card OPTCI is used for connecting the 9000X Drive to Ethernet networks utilizing Modbus protocol. It includes an RJ-45 pluggable connector. This interface provides a selection of standard and custom register values to communicate drive parameters. The board supports 10 Mbps and 100 Mbps communication speeds. The IP address of the board is configurable over Ethernet using a supplied software tool.

BACnet Network Communications

The BACnet Network Card OPTCJ is used for connecting the 9000X Drive to BACnet networks. It includes a 5.08 mm pluggable connector. Data transfer is Master-Slave/Token Passing (MS/TP) RS-485. This interface uses a collection of 30 Binary Value Objects (BVOs) and 35 Analog Value Objects (AVOs) to communicate drive parameters. The card supports 9.6, 19.2 and 38.4 Kbaud communication speeds and supports network addresses 1–127.

Ethernet/IP Network Communications

The Ethernet/IP Network Card OPTCK is used for connecting the 9000X Drive to Ethernet/Industrial Protocol networks. It includes an RJ-45 pluggable connector. The interface uses CIP objects to communicate drive parameters (CIP is "Common Industrial Protocol", the same protocol used by DeviceNet). The board supports 10 Mbps and 100 Mbps communication speeds. The IP address of the board is configurable by Static, BOOTP and DHCP methods.

Control Panel Options

Factory Options

Description	Factory Installed Option Code	Field Installed NEMA Type 1/IP21 Catalog Number
Local/Remote Keypad SVX9000 Control Panel—This option is standard on all drives and consists of an RS-232 connection, backlit alphanumeric LCD display with nine indicators for the RUN status and two indicators for the control source. The nine pushbuttons on the panel are used for panel programming and monitoring of all SVX9000 parameters. The panel is detachable and isolated from the input line potential. Include LOC/REM key to choose control location.	**A**	**KEYPAD-LOC/REM**
Keypad Remote Mounting Kit—This option is used to remote mount the SVX9000 keypad. The footprint is compatible to the SV9000 remote mount kit. Includes 10 ft cable, keypad holder and mounting hardware.	—	**OPTRMT-KIT-9000X**
Keypad Blank—9000X Series select keypad for use with special and custom applications.	—	**KEYPAD-BLANK**

Miscellaneous Options

Description	Catalog Number
9000XDrive—A PC-based tool for controlling and monitoring of the SVX9000. Features include: loading parameters that can be saved to a file or printed, setting references, starting and stopping the motor, monitoring signals in graphical or text form, and real-time display. To avoid damage to the drive or computer, SVDrivecable must be used.	**9000XDRIVE**
SVDrivecable—6 ft (1.8m) RS-232 cable (22 gauge) with a 7-pin connector on each end. Should be used in conjunction with the 9000XDrive option to avoid damage to the SVX9000 or computer. The same cable can be used for downloading specialized applications to the drive.	**SVDRIVECABLE**
External Dynamic Braking Resistors—Used with the dynamic braking chopper circuit to absorb motor regenerative energy for stopping the load and to dissipate the energy flowing back into the drive. Resistors are separated into standard duty and heavy-duty. Standard duty is defined as 20% duty or less with 100% braking torque, while heavy-duty is defined as 50% duty or less with 150% braking torque.	①

SPX9000 Drive Options

Brake Chopper Options

The brake chopper circuit option is used for applications that require dynamic braking. Dynamic braking resistors are not included with drive purchase. Consult the factory for dynamic braking resistors which are supplied separately. Resistors are not UL Listed.

For brake chopper circuit selection and adder—NEMA Type 1/IP21, NEMA Type 12/IP54, Chassis, consult the factory. Delivery code is FP.

Conformal (Varnished) Coating ②

Chassis Frame	Delivery Code
FR4	FP
FR5	FP
FR6	FP
FR7	FP
FR8	FP
FR9	FP
FR10	FP
FR11	FP
FR12	FP
FR13	FP
FR14	FP

Conformal Coated Board Kits ③

Field Installed Catalog Number	Factory Installed Option Designator
OPT_V ④	⑤

Notes

① Consult factory.
② See Product Selection on **Pages V6-T2-101** to **V6-T2-105**, 208–240V, 380–500V, 525–690V. Consult the factory for adder
③ See option catalog numbers on **Page V6-T2-107**.
④ Replace "__" with the correct catalog number from **Page V6-T2-107**. Example: OPT**C2**V.
⑤ Construct catalog numbers for factory installed per Catalog Number Selection on **Page V6-T2-100**.

Control/Communication Options

Available Control/Communications Options

Option	Description	Option Type
K2	**Door-Mounted Speed Potentiometer with HOA Selector Switch**—Provides the SPX9000 with the ability to start/stop and adjust the speed reference from door-mounted control devices or remotely from customer supplied inputs. In HAND position, the drive will start and the speed is controlled by the door-mounted speed potentiometer. The drive will be disabled in the OFF position. When AUTO is selected, the drive run and speed control commands are via user-supplied dry contact and 4–20 mA signal.	Control
K4	**HAND/OFF/AUTO Switch for Non-Bypass Configurations**—Provides a three-position selector switch that allows the user to select either a HAND or AUTO mode of operation. HAND mode is defaulted to keypad operation, and AUTO mode is defaulted to control from an external terminal source. These modes of operation can be configured via programming to allow for alternate combinations of start and speed sources. Start and speed sources include keypad, I/O and fieldbus.	Control
KB	**115V Control Transformer, 550 VA**—Provides a fused control power transformer with additional 550 VA at 115V for customer use.	Control
L1	**Power On and Fault Pilot Lights**—Provide a white power on light that indicates power to the enclosed cabinet and a red fault light that indicates a drive fault has occurred.	Light
P2	**Disconnect Switch**—Disconnect switch option is applicable only with NEMA Type 1/IP21 and NEMA Type 12/IP54 Freestanding drives. Allows a convenient means of disconnecting the SPX9000 from the line, and the operating mechanism can be padlocked in the OFF position. This is factory-mounted in the enclosure.	Input

SPX Freestanding Options

480V and 690V Control Options, 200–550 hp ①

Description	Catalog Number Suffix
Door-mounted speed potentiometer with HOA selector switch	**K2**
HAND/OFF/AUTO switch (22 mm)	**K4**
115 volt control transformer 550 VA	**KB**

480V and 690V Light Options, 200–550 hp ①

Description	Catalog Number Suffix
Power on/fault pilot lights	**L1**

Input Options, 200–550 hp ①

Description	Catalog Number Suffix
Disconnect switch	**P2** ②

Notes

① Consult factory for adder information.

② Applicable with FR10 and FR11 freestanding designs only.

Replacement Parts

SPX9000 Drives Spare Units

208–690V, Frames 4–12

Description	Catalog Number
Control unit–Includes the control board, blue base housing, installed SVX9000 software program and blue flip cover. Does not include any OPT boards or keypad. See **Page V6-T2-107** for standard and option boards and keypad.	**CSBS0000000000**

SPX9000 Drives Replacement Parts

208–240V, Frames FR4–FR8

Frame	4					5			6		7			8			Delivery	
hp (I_H):	3/4	1	1-1/2	2	3	5 ①	5	7-1/2	10	15	20	25	30	40	50	60	Code	Catalog Number
Control Board																		
	1	1	1	1	1	1	1	1	1	1	1	1	1	1	1	1	W	**VB00561**
Power Boards																		
	1																FB	**VB00308-0004-2**
		1															FB	**VB00308-0007-2**
			1														FB	**VB00308-0008-2**
				1													FB	**VB00310-0011-2**
					1												FB	**VB00310-0012-2**
						1											FB	**VB00313-0017-2**
							1										FB	**VB00313-0025-2**
								1									FB	**VB00313-0031-2**
									1								FB	**VB00316-0048-2**
										1							FB	**VB00316-0061-2**
											1						FB	**VB00319-0075-2**
												1					FB	**VB00319-0088-2**
													1				FB	**VB00319-0114-2**
														1			FB	**VB00322-0140-2**
															1		FB	**VB00322-0170-2**
																1	FB	**VB00322-0205-2**
Electrolytic Capacitors																		
	2	2	2														W	**PP01000**
				2	2												W	**PP01001**
						2	2										W	**PP01002**
								2									W	**PP01003**
									2	2							W	**PP01004**
											2	2	2	4	4		W	**PP01005**
																4	W	**PP01099**

Note

① I_L only; has no corresponding I_H rated hp rating.

208–240V, Frames FR4–FR8, continued

Frame	4					5			6		7			8			Delivery Code	Catalog Number
hp (I_H):	3/4	1	1-1/2	2	3	5 ①	5	7-1/2	10	15	20	25	30	40	50	60		
Cooling Fans																		
	1	1	1	1	1												W	**PP01060**
						1	1	1									W	**PP01061**
									1	1							W	**PP01062**
											1	1	1				W	**PP01063**
														1	1	1	FC	**PP01123** ②
	1	1	1	1	1												W	**PP01086**
						1	1	1	1	1							FC	**PP01088**
											1	1	1				W	**PP01049**
														1	2	2	FC	**CP01180**
														1	1	1	FC	**PP08037**
IGBT Modules																		
	1	1															W	**CP01304**
			1														W	**CP01305**
				1	1	1											W	**CP01306**
							1										W	**CP01307**
								1									W	**CP01308**
									1								W	**PP01022**
										1							W	**PP01023**
											1						W	**PP01024**
												1					W	**PP01025**
													1				W	**PP01029**
														1			W	**PP01026**
															1	1	W	**PP01027**
Choppers/Rectifiers																		
									1								W	**CP01367**
										1							W	**CP01368**
Diode/Thyristor Modules																		
											3	3	3				W	**PP01035**
														3	3	3	W	**CP01268**
Rectifying Boards																		
											1	1	1				W	**VB00242**
														1	1	1	W	**VB00227**

Note

② PP00061 capacitor not included in main fan; please order separately.

380–500V, Frames FR4–FR9

Frame	4						5			6			7			8			9		Delivery Code	Catalog Number
hp (I_H):	1	1-1/2	2	3	5	7-1/2 ①	7-1/2	10	15	20	25	30	40	50	60	75	100	125	150	200		
Control Board																						
	1	1	1	1	1	1	1	1	1	1	1	1	1	1	1	1	1	1	1	1	W	**VB00252**
Power Boards																						
	1																				FB	**VB00208-0003-5**
		1																			FB	**VB00208-0004-5**
			1																		FB	**VB00208-0005-5**
				1																	FB	**VB00208-0007-5**
					1																FB	**VB00208-0009-5**
						1															FB	**VB00210-0012-5**
							1														FB	**VB00213-0016-5**
								1													FB	**VB00213-0022-5**
									1												FB	**VB00213-0031-5**
										1											FB	**VB00216-0038-5**
											1										FB	**VB00216-0045-5**
												1									FB	**VB00216-0061-5**
													1								FB	**VB00219-0072-5**
														1							FB	**VB00219-0087-5**
															1						FB	**VB00219-0105-5**
																1					FB	**VB00236-0140-5**
																	1				FB	**VB00236-0168-5**
																		1			FB	**VB00236-0205-5**
Electrolytic Capacitors																						
	2	2	2	2																	W	**PP01000**
					2	2															W	**PP01001**
							2	2													W	**PP01002**
									2												W	**PP01003**
										2	2	2									W	**PP01004**
													2	2	2	4	4	4	8	8	W	**PP01005**
Cooling Fans																						
	1	1	1	1	1	1															W	**PP01060**
							1	1	1												W	**PP01061**
										1	1	1									W	**PP01062**
													1	1	1						W	**PP01063**
																1	1	1			FC	**PP01123** ②
																			1	1	FC	**PP01080** ③
	1	1	1	1	1	1															W	**PP01086**
							1	1	1												FC	**PP01088**
										1	1	1	1	1	1						W	**PP01049**
																1	1	1			FC	**CP01180**
																			1 ④	2	W	**PP01068**
																			1	1	FC	**PP09051**

Notes

① I_L only; has no corresponding I_H rated hp rating.

② PP00061 capacitor not included in main fan; please order separately.

③ PP00011 capacitor not included in main fan; please order separately.

④ For FR9 NEMA Type 12/IP54 you need two PP01068 internal fans.

380–500V, Frames FR4–FR9, continued

Frame	4						5			6			7			8			9		Delivery Code	Catalog Number
hp (I_H):	1	1-1/2	2	3	5	7-1/2 ①	7-1/2	10	15	20	25	30	40	50	60	75	100	125	150	200		
IGBT Modules																						
	1	1	1																		W	**CP01304**
				1	1																W	**CP01305**
						1	1														W	**CP01306**
								1													W	**CP01307**
									1												W	**CP01308**
										1	1										W	**PP01022**
												1									W	**PP01023**
													1								W	**PP01024**
														1							W	**PP01025**
															1						W	**PP01029**
																1					W	**PP01026**
																	1	1			W	**PP01027**
Chopper/Rectifiers																						
										1	1										W	**CP01367**
												1									W	**CP01368**
Diode/Thyristor Modules																						
													3	3	3						W	**PP01035**
																3	3	3			W	**CP01268**
																			3	3	W	**PP01037**
Rectifying Boards																						
													1	1	1						W	**VB00242**
																1	1	1			W	**VB00227**
																			1	1	W	**VB00459**
Rectifying Module Sub-assembly																						
																			1	1	W	**FR09810**
Power Module Sub-assemblies																						
																			1		W	**FR09-150-4-ANS** ②
																				1	W	**FR09-200-4-ANS** ②

Notes

① I_L only; has no corresponding I_H rated hp rating.

② See **Page V6-T2-100** for details.

380–500V, Frames FR10–FR12

Frame	10			11			12			Delivery	
hp (I_H):	250	300	350	400	500	550	600	650	700	Code	Catalog Number
Control Board											
1	1	1	1	1	1	1	1	1	1	W	**VB00561**
Shunt Boards											
6										FC	**VB00537**
	6									FC	**VB00497**
		6					12	12	12	FC	**VB00498**
			9							FC	**VB00538**
				9						FC	**VB00513**
					9					FC	**VB00514**
Driver Boards											
			3	3	3					FC	**VB00489**
1	1	1					2	2	2	FC	**VB00487**
Driver Adapter Board											
1	1	1					2	2	2	FC	**VB00330**
ASIC Board											
1	1	1	1	1	1	1	2	2	2	FC	**VB00451**
Feedback Interface Board											
							2	2	2	FC	**VB00448**
Star Coupler Board											
							1	1	1	FC	**VB00336**
Power Modules											
1	1	1	2	2	2	2	2	2	FC	**FR10820** ①
2	2	2								FC	**FR10828**
1										FC	**FR10-250-4-ANS** ②
	1									FC	**FR10-300-4-ANS** ②
		1					2	2	2	FC	**FR10-350-4-ANS** ②
			3							FC	**FR11–400-4-ANS** ②
				3						FC	**FR11-500-4-ANS** ②
					3					FC	**FR11-550-4-ANS** ②
Electrolytic Capacitors											
2	2	2	3	3	3	4	4	4	FC	**PP00060**
12	12	12	18	18	18	24	24	24	FC	**PP01005**
Fuses											
1	1	1	1	1	1	2	2	2	FC	**PP01094**
2	2	2	2	2	2	4	4	4	FC	**PP01095**
Cooling Fans and Isolation Transformers											
2	2	2	3	3	3	4	4	4	FC	**VB00299**
2	2	2	3	3	3	4	4	4	FC	**PP01080** ③
2	2	2				4	4	4	FC	**PP01068**
1	1	1	1	1	1	2	2	2	FC	**PP01096**
1	1	1				2	2	2	FC	**FR10844**
1	1	1	3	3	3	2	2	2	FC	**FR10845**
1	1	1				2	2	2	FC	**FR10846**
1	1	1	3	3	3	2	2	2	FC	**FR10847**
Rectifying Board											
1	1	1	2	2	2	2	2	2	FC	**VB00459**

Notes

① Rectifying board not included.

② See **Page V6-T2-100** for details.

③ PP00060 capacitor not included in main fan; please order separately.

525–690V, Frames FR6–FR9

Frame	6									7		8			9				Delivery	
hp (I_H):	2	3	5 ①	5	7-1/2	10	15	20	25	30	40	50	60	75	100	125	150	200 ①	Code	Catalog Number
Control Board																				
	1	1	1	1	1	1	1	1	1	1	1					1	1	1	W	**VB00561**
Driver Boards																				
	1																		FB	**VB00404-0004-6**
		1																	FB	**VB00404-0005-6**
			1																FB	**VB00404-0007-6**
				1															FB	**VB00404-0010-6**
					1														FB	**VB00404-0013-6**
						1													FB	**VB00404-0018-6**
							1												FB	**VB00404-0022-6**
								1											FB	**VB00404-0027-6**
									1										FB	**VB00404-0034-6**
Power Boards																				
	1	1	1	1	1	1	1	1	1										FB	**VB00414**
										1									FB	**VB00419-0041-6**
											1								FB	**VB00419-0052-6**
												1							FB	**VB00422-0062-6**
													1						FB	**VB00422-0080-6**
														1					FB	**VB00422-0100-6**
Power Modules																				
															1				FC	**FR09-100-5-ANS** ②
																1			FC	**FR09-125-5-ANS** ②
																	1		FC	**FR09-150-5-ANS** ②
																		1	FC	**FR09-175-5-ANS** ②
Electrolytic Capacitors																				
	2	2	2	2	2	2	2	2	2										FC	**PP01093**
										2	2	4	4		8	8	8	8	FC	**PP01041**
														4					FC	**PP01040**
Fuses																				
												1	1	1	1	1	1	1	W	**PP01094**
												2	2	2	2	2	2	2	W	**PP01095**

Notes

① I_L only; has no corresponding I_H rated hp rating.

② See **Page V6-T2-100** for details.

525–690V, Frames FR6–FR9, continued

Frame	6									7		8			9					
hp (I_H):	2	3	5 ①	5	7-1/2	10	15	20	25	30	40	50	60	75	100	125	150	200 ①	Delivery Code	Catalog Number
Cooling Fans																				
	1	1	1	1	1														W	**PP01061**
						1	1	1	1										W	**PP01062**
										1	1								W	**PP01063**
												1	1	1					FC	**PP01123**
	1	1	1	1	1	1	1	1	1	1	1								W	**PP01049**
												1	1	1					FC	**CP01180**
															1	1	1	1 ②	W	**PP01068**
															1	1	1	1	FC	**PP01080**
Fan Power Supply																				
																1	1	1	FC	**VB00299**
IGBT Modules																				
	3	3	3	3	3	3	3	3	3										FC	**PP01091**
										1	1								FC	**PP01089**
												1	1	1					FC	**PP01127**
IGBT/Diode (Brake)																				
	1	1	1	1	1	1	1	1	1	1	1	2	2	2	2	2	2	2	FC	**PP01040**
Diode Module																				
	1	1	1	1	1	1	1	1	1										FC	**PP01092**
Diode/Thyristor Modules																				
										3	3								FC	**PP01071**
															3	3	3	3	FC	**PP01072**
Rectifying Boards																				
										1	1								FC	**VB00442**
															1	1	1	1	FC	**VB00460**
Rectifying Module Sub-Assemblies																				
																1	1	1	W	**FR09810**
																1	1	1	FC	**FR09811**

Notes

① I_L only; has no corresponding I_H rated hp rating.

② For NEMA Type 12/IP54, two PP01068 internal fans are needed.

525–690V, Frames FR10–FR12

Frame	10			11			12			Delivery Code	Catalog Number
hp (I_H):	250	300	350	400	500	550	600	650	700		
Component Boards											
	1	1	1	1	1	1	1	1	1	W	**VB00561**
	1	1	1	1	1	1	2	2	2	FC	**VB00451**
	6									FC	**VB00545**
		6								FC	**VB00510**
			6				12	12	12	FC	**VB00511**
	1	1	1				2	2	2	FC	**VB00330**
	1	1	1				2	2	2	FC	**VB00487**
				3	3	3				FC	**VB00489**
				9						FC	**VB00546**
					9					FC	**VB00547**
						9				FC	**VB00512**
							2	2	2	FC	**VB00448**
							1	1	1	FC	**VB00336**
Power Modules											
	1	1	1	2	2	2	2	2	2	FC	**FR10821** ①
	2	2	2							FC	**FR10829**
	1									FC	**FR10-200-5-ANS** ②
		1								FC	**FR10-250-5-ANS** ②
			1				2	2	2	FC	**FR10-300-5-ANS** ②
				3						FC	**FR11–400-5-ANS** ②
					3					FC	**FR11-450-5-ANS** ②
						3				FC	**FR11-500-5-ANS** ②
Electrolytic Capacitors											
	2	2	2	3	3	3	4	4	4	FC	**PP00060**
	12	12	12	18	18	18	24	24	24	FC	**PP01099**
Fuses											
	1	1	1	1	1	1	2	2	2	FC	**PP01094**
	2	2	2	2	2	2	4	4	4	FC	**PP01095**
Cooling Fans and Isolation Transformers											
	2	2	2	3	3	3	4	4	4	FC	**VB00299**
	2	2	2	3	3	3	4	4	4	FC	**PP01080** ③
	2	2	2				4	4	4	FC	**PP01068**
	1	1	1	1	1	1	2	2	2	FC	**PP01096**
	1	1	1				2	2	2	FC	**FR10844**
	1	1	1	3	3	3	2	2	2	FC	**FR10845**
	1	1	1				2	2	2	FC	**FR10846**
	1	1	1	3	3	3	2	2	2	FC	**FR10847**
Fan Power Supply											
							1	1	1	FC	**VB00299**
Rectifying Boards											
	1	1	1	2	2	2	2	2	2	FC	**VB00460**

Notes

① Rectifying board not included.

② See **Page V6-T2-100** for details.

③ PP00060 capacitor not included in main fan; please order separately.

Technical Data and Specifications

SPX9000 Drives

Description	Specification
Input Ratings	
Input voltage (V_{in})	+10%/–15%
Input frequency (f_{in})	50/60 Hz (variation up to 45–66 Hz)
Connection to power	Once per minute or less (typical operation)
High withstand rating	100 kAIC
Output Ratings	
Output voltage	0 to V_{in}
Continuous output current	I_H rated 100% at 122°F (50°C), FR9 and below I_L rated 100% at 104°F (40°C), FR9 and below I_H/I_L 100% at 104°F (40°C), FR10 and above
Overload current (I_H/I_L)	150% I_H, 110% I_L for 1 min.
Output frequency	0 to 320 Hz
Frequency resolution	0.01 Hz
Initial output current (I_H)	250% for 2 seconds
Control Characteristics	
Control method	Frequency control (V/f) Open loop: sensorless vector control Closed loop: frequency control Closed loop: vector control
Switching frequency	Adjustable with parameter 2.6.9
Frame 4–6	1 to 16 kHz; default 10 kHz
Frame 7–12	1 to 10 kHz; default 3.6 kHz
Frequency reference	Analog input: Resolution 0.1% (10-bit), accuracy ±1% V/Hz Panel reference: Resolution 0.01 Hz
Field weakening point	30 to 320 Hz
Acceleration time	0 to 3000 sec.
Deceleration time	0 to 3000 sec.
Braking torque	DC brake: 30% x T_n (without brake option)
Ambient Conditions	
Ambient operating temperature	14°F (–10°C), no frost to 122°F (50°C) I_H (FR4–FR9) 14°F (–10°C), no frost to 104°F (40°C) I_L (FR10 and up) 14°F (–10°C), no frost to 104°F (40°C) I_L (all frames)
Storage temperature	–40° to 158°F (–40° to 70°C)
Relative humidity	0 to 95% RH, noncondensing, non-corrosive, no dripping water
Air quality	Chemical vapors: IEC 721-3-3, unit in operation, class 3C2; Mechanical particles: IEC 721-3-3, unit in operation, class 3S2
Altitude	100% load capacity (no derating) up to 3280 ft (1000m); 1% derating for each 328 ft (100m) above 3280 ft (1000m); max. 9842 ft (3000m)
Vibration	EN 50178, EN 60068-2-6; 5 to 50 Hz, displacement amplitude 1 mm (peak) at 3 to 15.8 Hz, max. acceleration amplitude 1G at 15.8 to 150 Hz
Shock	EN 50178, EN 60068-2-27 UPS Drop test (for applicable UPS weights) Storage and shipping: max. 15G, 11 ms (in package)
Enclosure class	NEMA 1/IP21 or NEMA 12/IP54, open chassis/IP20

Description	Specification
Control Connections	
Analog input voltage	0 to 10V, R = 200 kohms (–10 to 10V joystick control) resolution 0.1%; accuracy ±1%
Analog input current	0(4) to 20 mA; R_i—250 ohms differential
Digital inputs (6)	Positive or negative logic; 18 to 30 Vdc
Auxiliary voltage	+24V ±15%, max. 250 mA
Output reference voltage	+10V +3%, max. load 10 mA
Analog output	0(4) to 20 mA; R_L max. 500 ohms; resolution 10 bit; Accuracy ±2%
Digital outputs	Open collector output, 50 mA/48V
Relay outputs	2 programmable Form C relay outputs switching capacity: 24 Vdc/8A, 250 Vac/8A, 125 Vdc/0.4A
Protections	
Overcurrent protection	Trip limit 4.0 x I_H instantaneously
Overvoltage protection	Yes
Undervoltage protection	Yes
Earth fault protection	In case of earth fault in motor or motor cable, only the frequency converter is protected
Input phase supervision	Trips if any of the input phases are missing
Motor phase supervision	Trips if any of the output phases are missing
Overtemperature protection	Yes
Motor overload protection	Yes
Motor stall protection	Yes
Motor underload protection	Yes
Short circuit protection	Yes (+24V and +10V reference voltages)
High Performance Features	
Speed error	<0.01%, depending on the encoder
Encoder support	Incremental or absolute
Encoder voltages	5V (RS-422), 15V or 24V, depending on the option card
Torque control	Full torque control at all speeds, including zero
Torque accuracy	<2%; <5% down to zero speed
Starting torque	>200%, depending on motor and drive sizing
Master/slave configurations	Full capability
System analysis	Integrated data logger
PC communication	Fast multiple drive monitoring with PC
Inter-drive communication	High-speed bus (12 Mbits/s)
High-speed applications	Up to 7200 Hz

Dimensions

Approximate Dimensions in Inches (mm)

9000X Drives

NEMA Type 1/IP21 and NEMA Type 12/IP54, FR4, FR5 and FR6

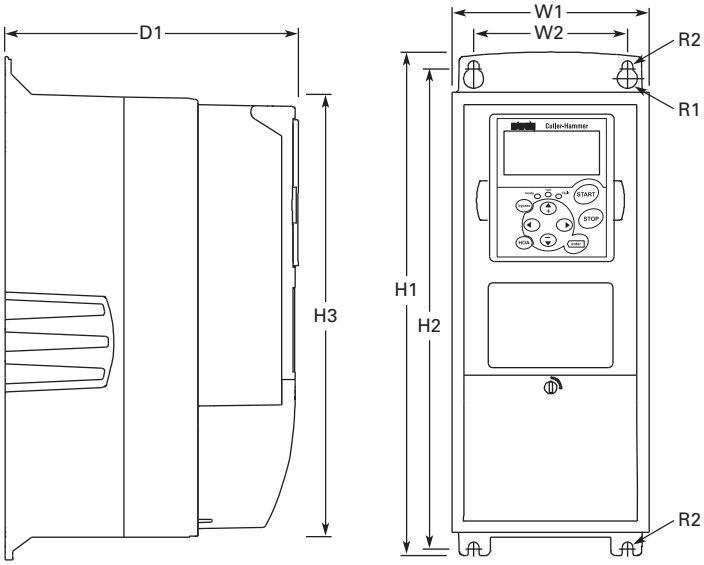

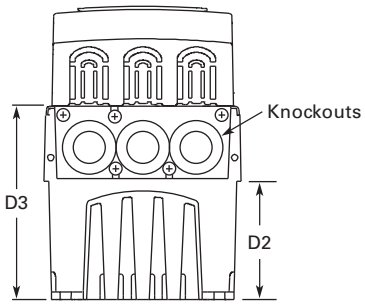

Voltage	hp (I_H)	H1	H2	H3	D1	D2	D3	W1	W2	R1 Dia.	R2 Dia.	Weight Lbs (kg)	Knockouts at Inches (mm) N1 (O.D.)
FR4													
230V	3/4–3	12.9 (327)	12.3 (313)	11.5 (292)	7.5 (190)	3.0 (77)	5.0 (126)	5.04 (128)	3.9 (100)	0.5 (13)	0.3 (7)	11.0 (5)	3 at 10.1 (28)
480V	1–5												
FR5													
230V	5–7-1/2	16.5 (419)	16.0 (406)	15.3 (389)	8.4 (214)	3.9 (100)	5.8 (148)	5.7 (144)	3.9 (100)	0.5 (13)	0.3 (7)	17.9 (8)	2 at 1.5 (37) 1 at 10.1 (28)
480V	7-1/2–15												
FR6													
230V	10–15	22.0 (558)	21.3 (541)	20.4 (519)	9.3 (237)	4.2 (105)	6.5 (165)	7.7 (195)	5.8 (148)	0.6 (15.5)	0.4 (9)	40.8 (19)	3 at 1.5 (37)
480V	20–30												
575V	2–25												

Approximate Dimensions in Inches (mm)

NEMA Type 1/IP21 and NEMA Type 12/IP54 with Flange Kit, FR4, FR5 and FR6

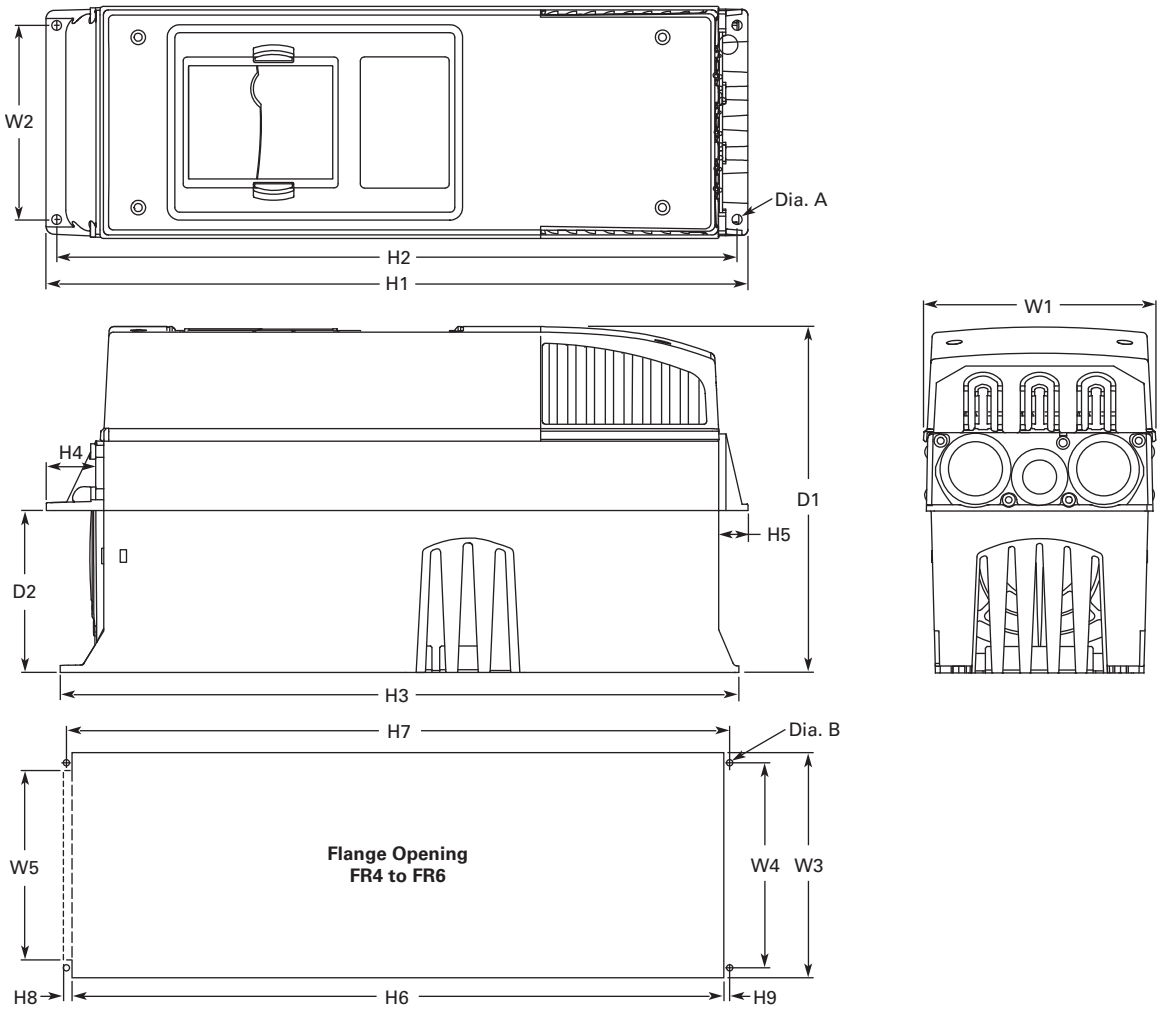

FR4, FR5 and FR6 with Flange Kit

W1	W2	H1	H2	H3	H4	H5	D1	D2	Dia. A
FR4									
5.0 (128)	4.5 (113)	13.3 (337)	12.8 (325)	12.9 (327)	1.2 (30)	0.9 (22)	7.5 (190)	3.0 (77)	0.3 (7)
FR5									
5.6 (143)	4.7 (120)	17.0 (434)	16.5 (420)	16.5 (419)	1.4 (36)	0.7 (18)	8.4 (214)	3.9 (100)	0.3 (7)
FR6									
7.7 (195)	6.7 (170)	22.0 (560)	21.6 (549)	22.0 (558)	1.2 (30)	0.8 (20)	9.3 (237)	4.2 (106)	0.3 (7)

Flange Opening, FR4 to FR6

W3	W4	W5	H6	H7	H8	H9	Dia. B
FR4							
4.8 (123)	4.5 (113)	—	12.4 (315)	12.8 (325)	—	0.2 (5)	0.3 (7)
FR5							
5.3 (135)	4.7 (120)	—	16.2 (410)	16.5 (420)	—	0.2 (5)	0.3 (7)
FR6							
7.3 (185)	6.7 (170)	6.2 (157)	21.2 (539)	21.6 (549)	0.3 (7)	0.2 (5)	0.3 (7)

Approximate Dimensions in Inches (mm)

NEMA Type 1/IP21 and NEMA Type 12/IP54, FR7

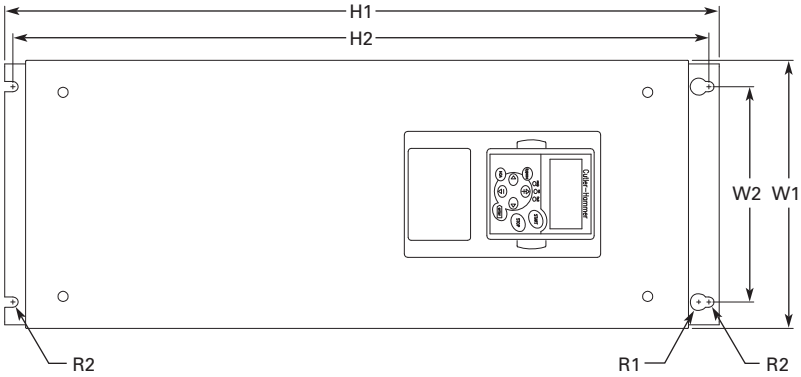

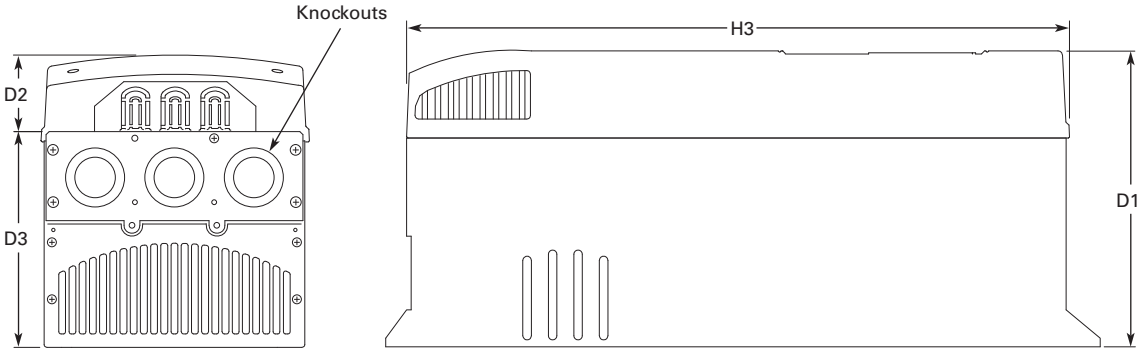

Voltage	hp (I_H)	H1	H2	H3	D1	D2	D3	W1	W2	R1 Dia.	R2 Dia.	Weight Lbs (kg)	Knockouts at Inches (mm) N1 (O.D.)
230V	20–30	24.8 (630)	24.2 (614)	23.2 (590)	10.1 (257)	3.0 (77)	7.3 (184)	9.3 (237)	7.5 (190)	0.7 (18)	0.4 (9)	77.2 (35)	3 at 1.5 (37)
480V	40–60												
575V	30–40												

Approximate Dimensions in Inches (mm)

NEMA Type 1/IP21 and NEMA Type 12/IP54, FR8

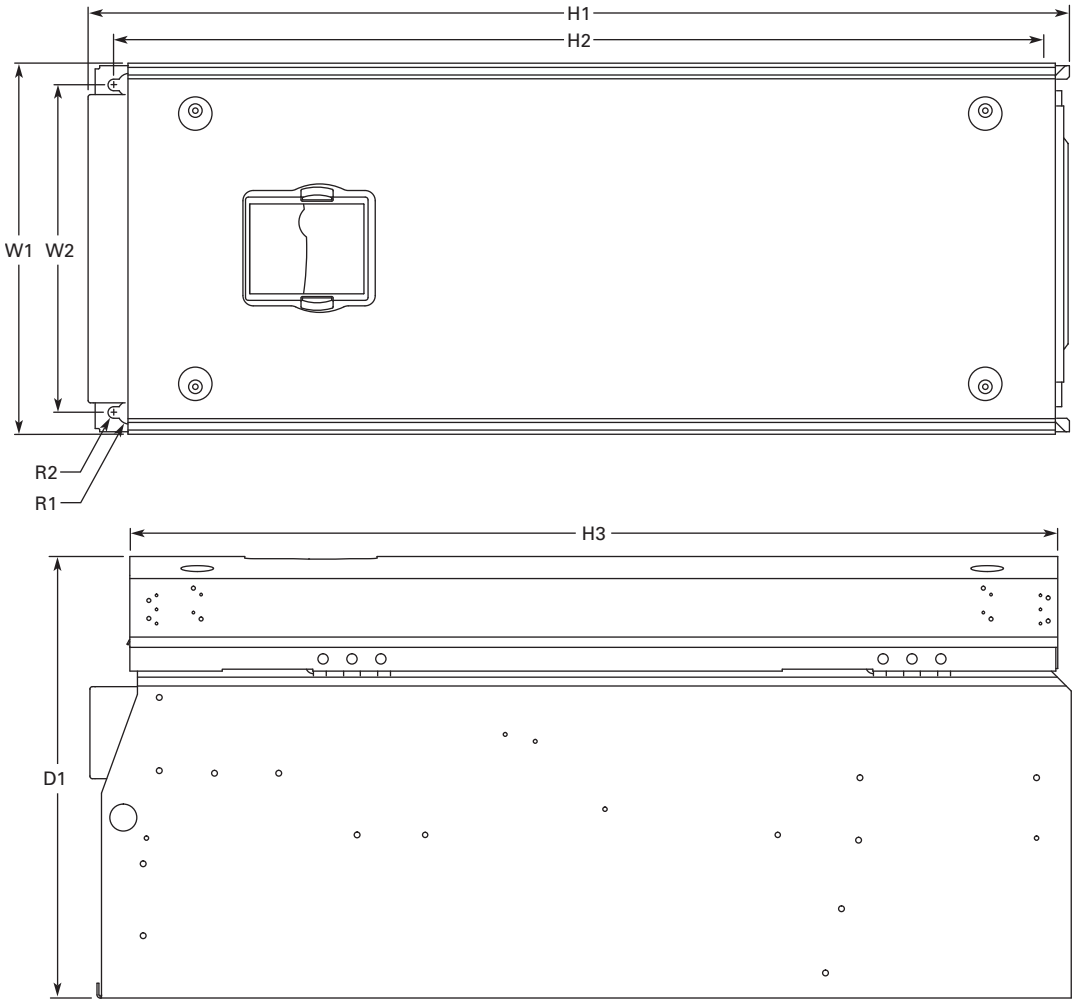

Voltage	hp (I_H)	D1	H1	H2	H3	W1	W2	R1 Dia.	R2 Dia.	Weight Lbs (kg)
230V	40–60	13.5 (344)	300.1 (764)	28.8 (732)	28.4 (721)	11.5 (291)	10 (255)	0.7 (18)	0.4 (9)	127 (58)
480V	75–125									
575V	50–75									

Approximate Dimensions in Inches (mm)

NEMA Type 1/IP21 and NEMA Type 12/IP54, with Flange Kit, FR7 and FR8

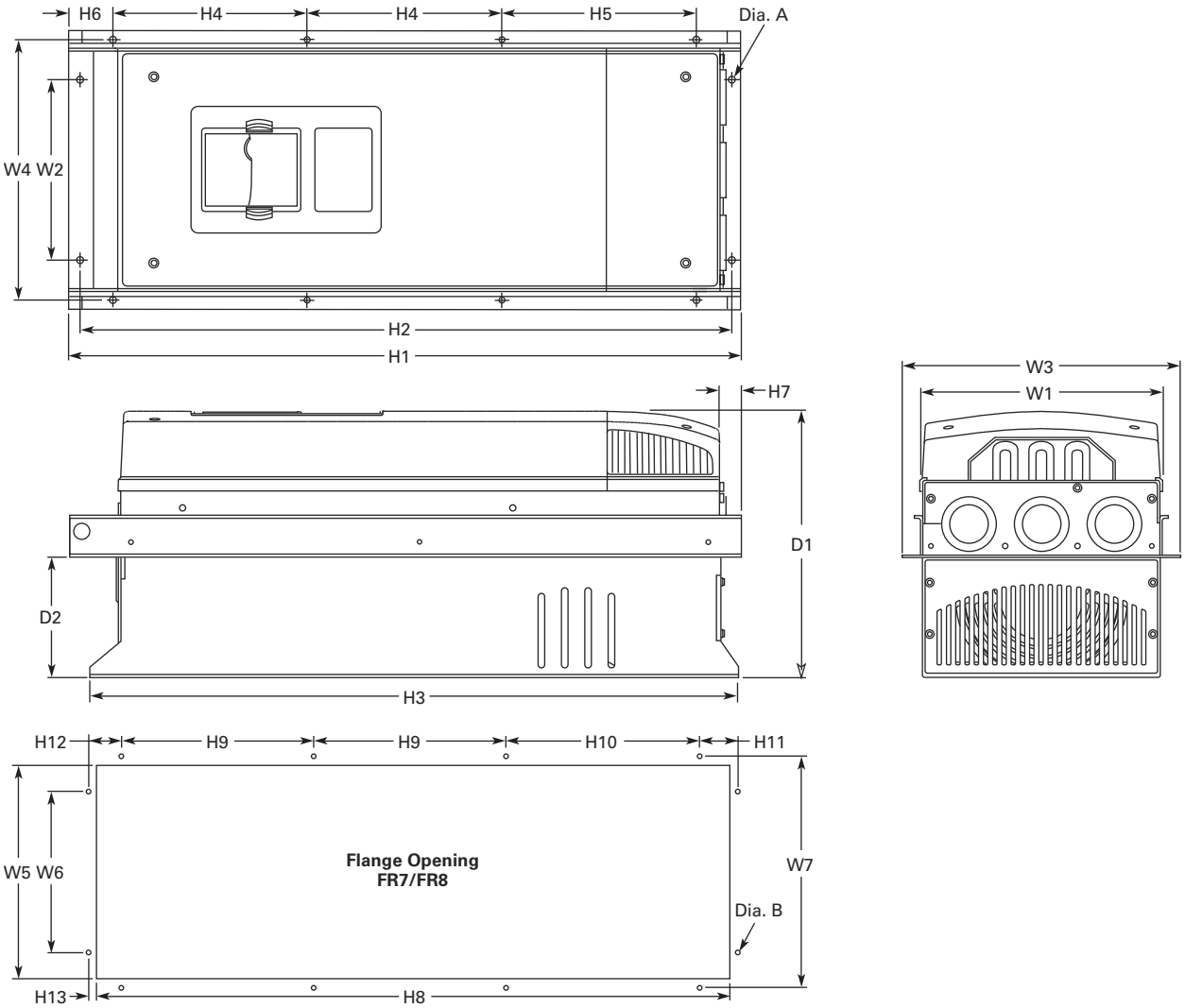

W1	W2	W3	W4	H1	H2	H3	H4	H5	H6	H7	D1	D2	Dia. A
FR7													
9.3 (237)	6.8 (175)	10.6 (270)	10.0 (253)	25.6 (652)	24.9 (632)	24.8 (630)	7.4 (189)	7.4 (189)	0.9 (23)	0.8 (20)	10.1 (257)	4.6 (117)	0.3 (6)
FR8													
11.2 (285)	—	14.0 (355)	13.0 (330)	32.8 (832)	—	29.3 (745)	10.2 (258)	10.4 (265)	1.7 (43)	2.2 (57)	13.5 (344)	4.3 (110)	0.4 (9)

Flange Opening, FR7 and FR8

W5	W6	W7	H8	H9	H10	H11	H12	H13	Dia. B
FR7									
9.2 (233)	6.9 (175)	10.0 (253)	24.4 (619)	7.4 (189)	7.4 (189)	1.4 (35)	1.3 (32)	1.0 (25)	0.3 (6)
FR8									
11.9 (301)	—	13.0 (330)	31.9 (810)	10.2 (258)	10.4 (265)	—	—	1.3 (33)	0.4 (9)

Approximate Dimensions in Inches (mm)

NEMA Type 1/IP21 and NEMA Type 12/IP54, FR9

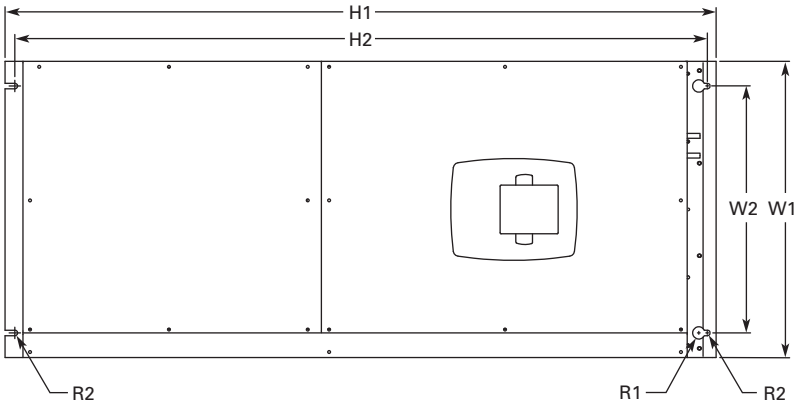

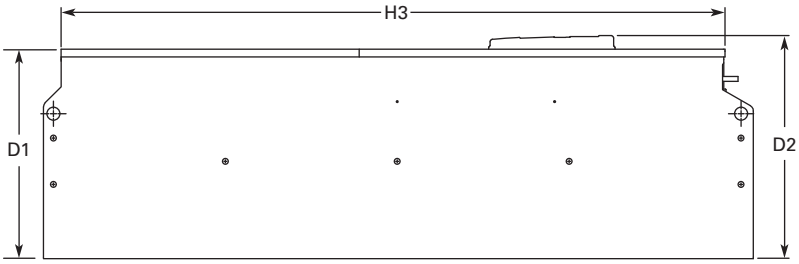

Voltage	hp (I_H)	H1	H2	H3	D1	D2	W1	W2	R1 Dia.	R2 Dia.	Weight Lbs (kg)
230V	75–100	45.3 (1150)	44.1 (1120)	42.4 (1076)	13.4 (340)	14.3 (362)	18.9 (480)	15.7 (400)	0.8 (20)	0.4 (9)	322 (146)
480V	150–200										
575V	100–175										

Approximate Dimensions in Inches (mm)

NEMA Type 1/IP21 and NEMA Type 12/IP54, FR9, continued

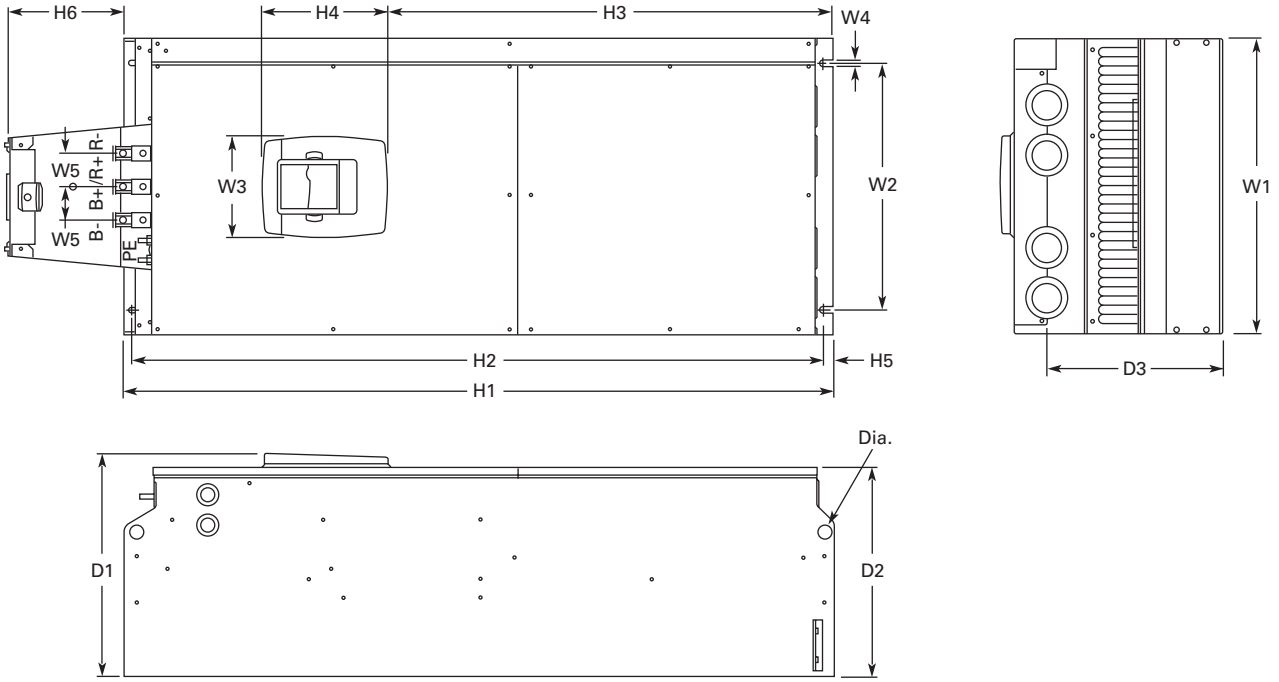

W1	W2	W3	W4	W5	H1	H2	H3	H4	H5	H6 ①	D1	D2	D3	Dia.
18.9 (480)	15.7 (400)	6.5 (165)	0.4 (9)	2.1 (54)	45.3 (1150)	44.1 (1120)	28.3 (721)	8.0 (205)	0.6 (16)	7.4 (188)	14.2 (361.5)	13.4 (340)	11.2 (285)	0.8 (21)

Note

① Brake resistor terminal box (H6) included when brake chopper ordered.

Approximate Dimensions in Inches (mm)

NEMA Type 1/IP21 and NEMA Type 12/IP54, FR9 with Flange Kit

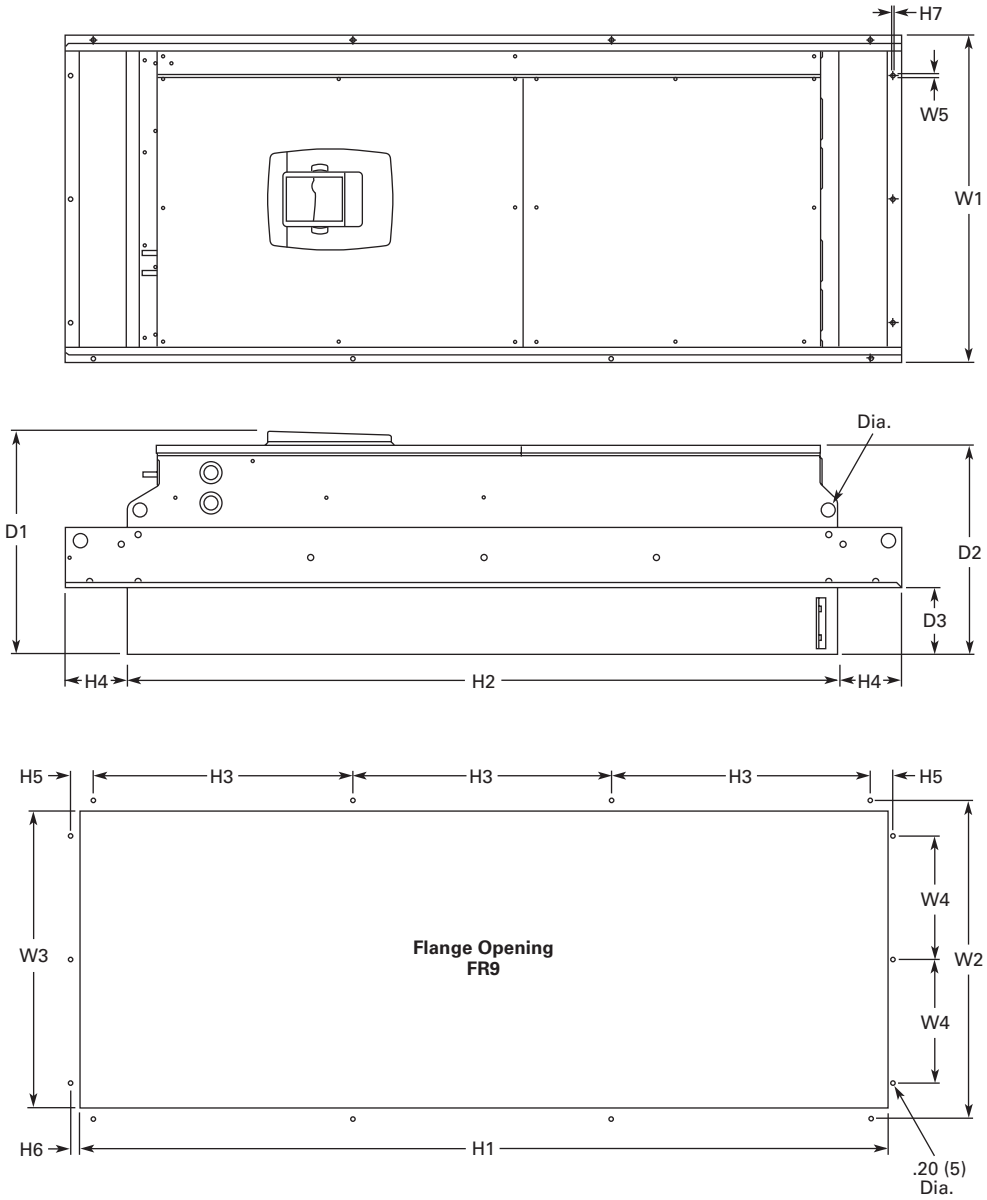

W1	W2	W3	W4	W5	H1	H2	H3	H4	H5	H6	H7	D1	D2	D3	Dia.
20.9 (530)	20.0 (510)	19.1 (485)	7.9 (200)	0.2 (5.5)	51.7 (1312)	45.3 (1150)	16.5 (420)	3.9 (100)	1.4 (35)	0.4 (9)	0.1 (2)	24.9 (362)	13.4 (340)	4.3 (109)	0.8 (21)

Approximate Dimensions in Inches (mm)

NEMA Type 1/IP21 and NEMA Type 12/IP54, FR10 Freestanding

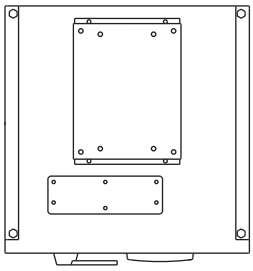

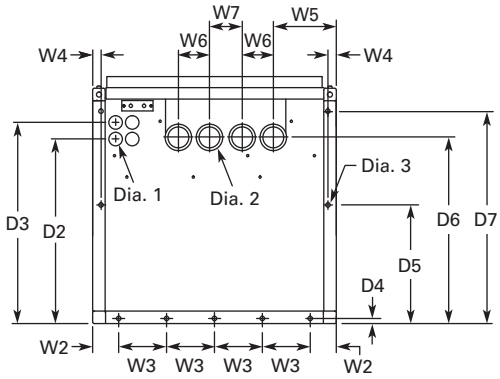

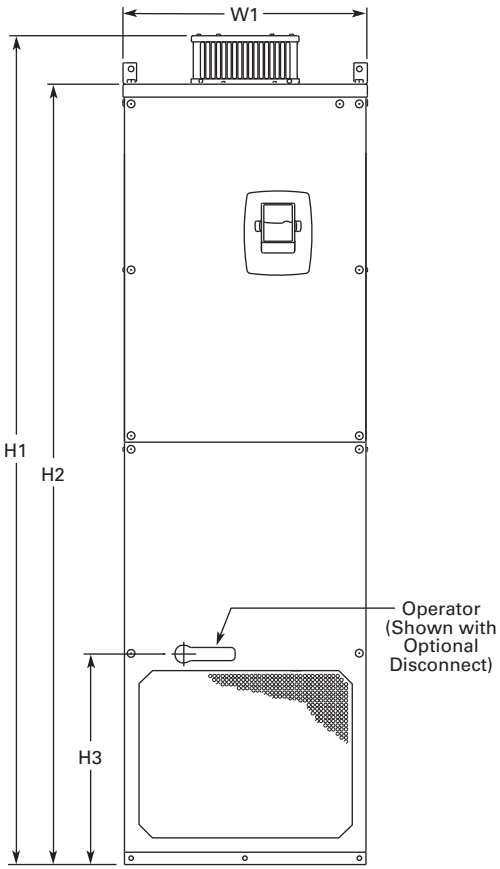

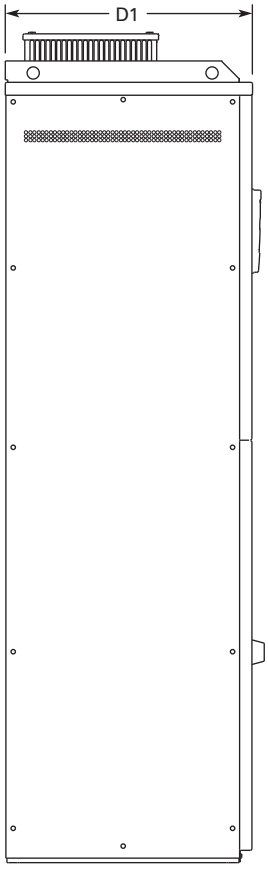

Volts	hp (I_H)	W1	W2	W3	W4	W5	W6	W7	H1	H2	H3	D1	D2	D3	D4	D5	D6	D7	Dia. 1	Dia. 2	Dia. 3	Weight Lbs (kg)
480V	250–350	23.43 (595)	2.46 (62.5)	4.53 (115)	0.79 (20)	5.95 (151)	2.95 (75)	30.11 (79)	79.45 (2018)	74.80 (1900)	20.18 (512.5)	23.70 (602)	17.44 (443)	19.02 (483)	0.47 (12)	11.22 (285)	17.60 (447)	20.08 (510)	0.83 (21)	1.89 (48)	0.43 (11)	875 (389)
690V	200–300																					

Approximate Dimensions in Inches (mm)

FR10 Open Chassis ①

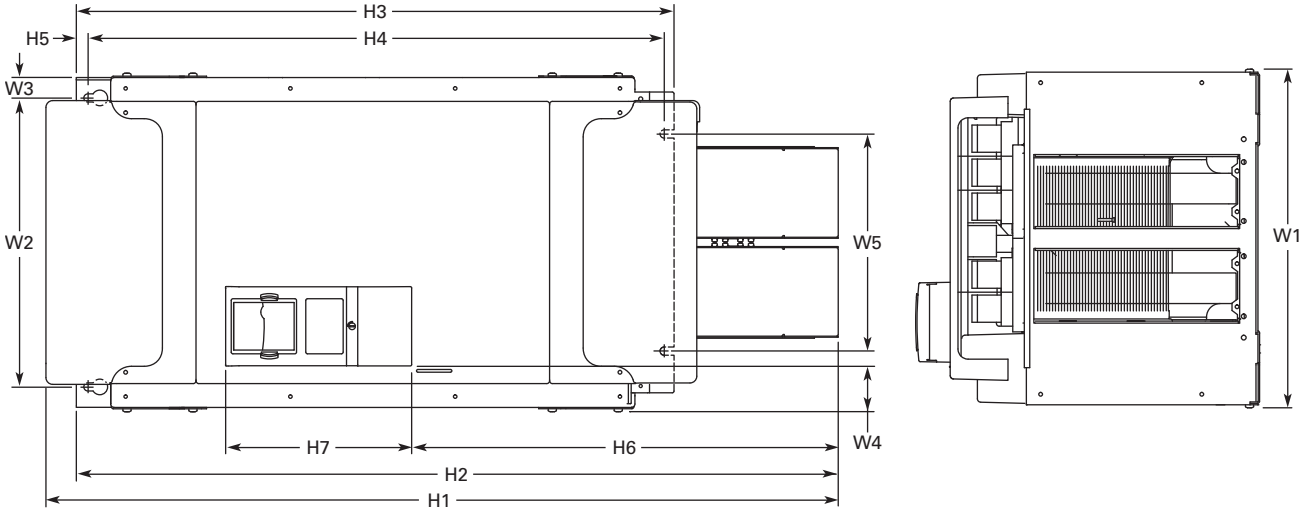

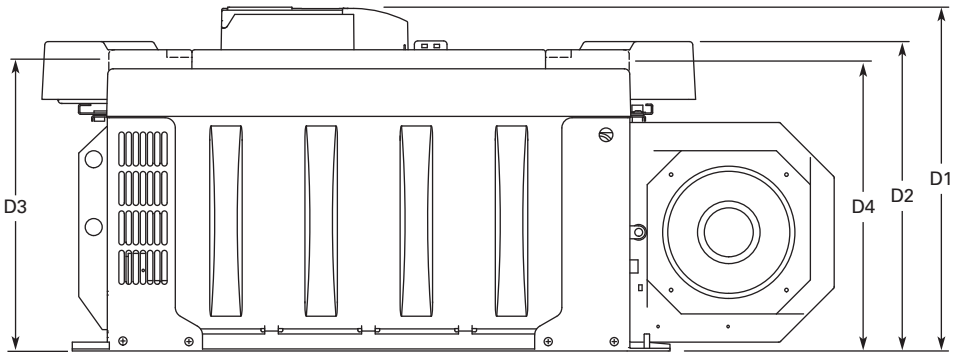

Voltage	hp (I_H)	W1	W2	W3	W4	W5	H1	H2	H3	H4	H5	H6	H7	D1	D2	D3	D4	Weight Lbs (kg)
480V	250–350	19.7 (500)	16.7 (425)	1.2 (30)	2.6 (67)	12.8 (325)	45.9 (1165)	44.1 (1121)	34.6 (879)	33.5 (850)	0.7 (17)	24.7 (627)	10.8 (275)	19.9 (506)	17.9 (455)	16.7 (423)	16.6 (421)	518 (235)
575V	200–300																	

Note

① SPX9000X FR12 is built of two FR10 modules. Please refer to SPX9000 installation manual for mounting instructions.

Approximate Dimensions in Inches (mm)

NEMA Type 1/IP21, FR11 Freestanding Drive

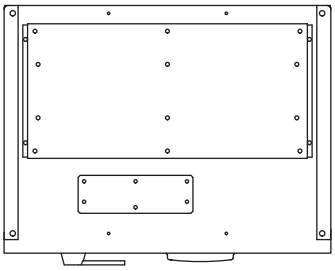

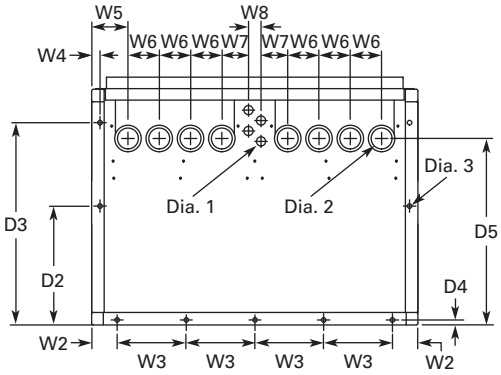

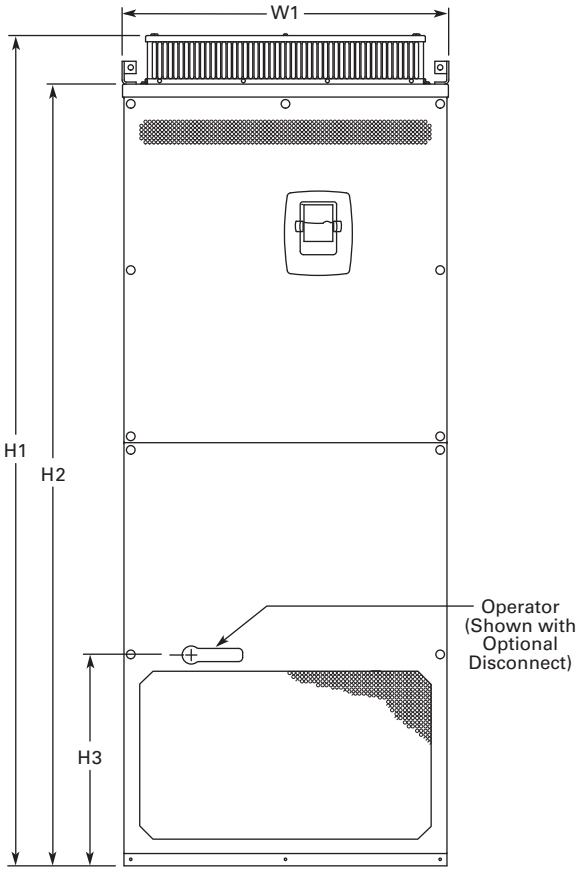

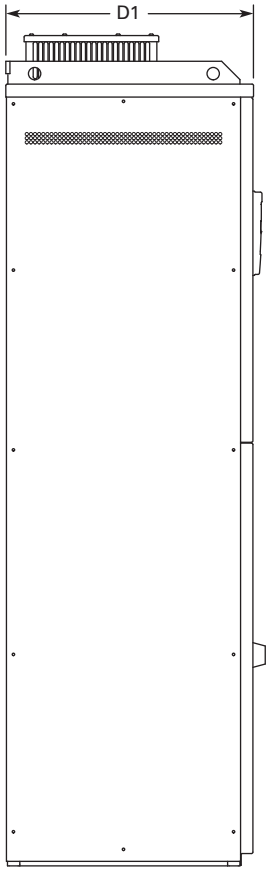

Voltage	hp (I_H)	W1	W2	W3	W4	W5	W6	W7	W8	H1	H2	H3	D1	D2	D3	D4	D5	Dia. 1	Dia. 2	Dia. 3	Weight Lbs (kg)
480V	400–550	31.26 (794)	2.40 (61)	6.50 (165)	0.79 (20)	3.43 (87)	2.95 (75)	2.52 (64)	1.18 (30)	79.45 (2018)	74.80 (1900)	20.18 (512.5)	23.70 (602)	11.22 (285)	19.09 (485)	0.47 (12)	17.60 (447)	0.83 (21)	1.89 (48)	0.35 x 0.43 (9 x 11)	526 (239)
690V	400–500																				

Approximate Dimensions in Inches (mm)

FR11 Open Chassis

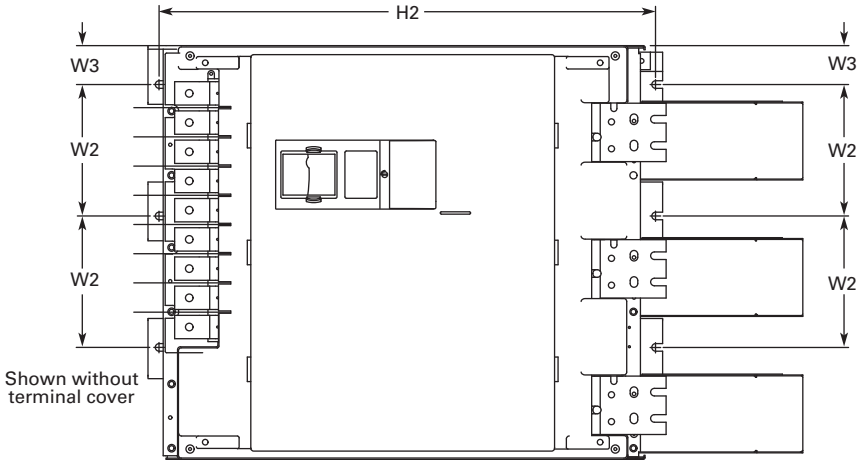

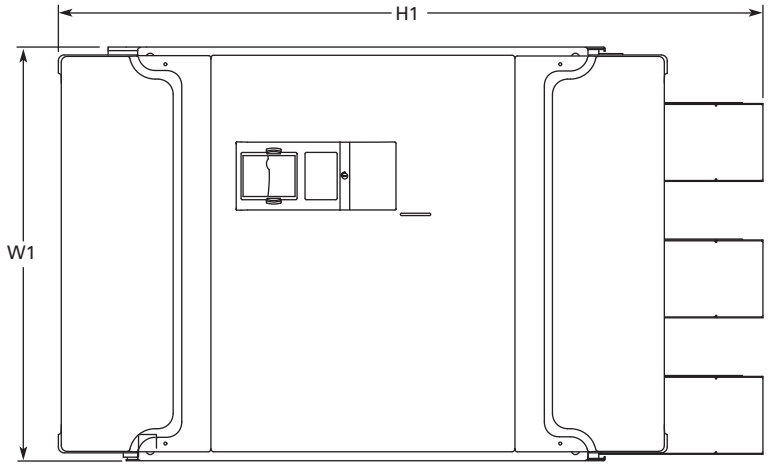

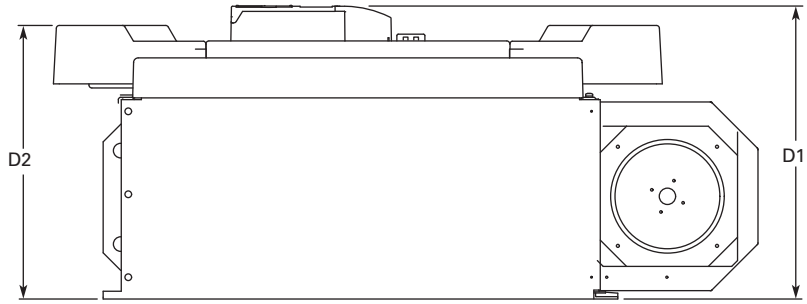

Voltage	hp (I_H)	W1	W2	W3	H1	H2	D1	D2	Weight Lbs (kg)
480V	400–550	27.9 (709)	8.6 (225)	2.6 (67)	45.5 (1155)	33.5 (850)	19.8 (503)	18.4 (468)	833 (378)
575V	400–500								

Approximate Dimensions in Inches (mm)

FR13, Open Chassis Inverter

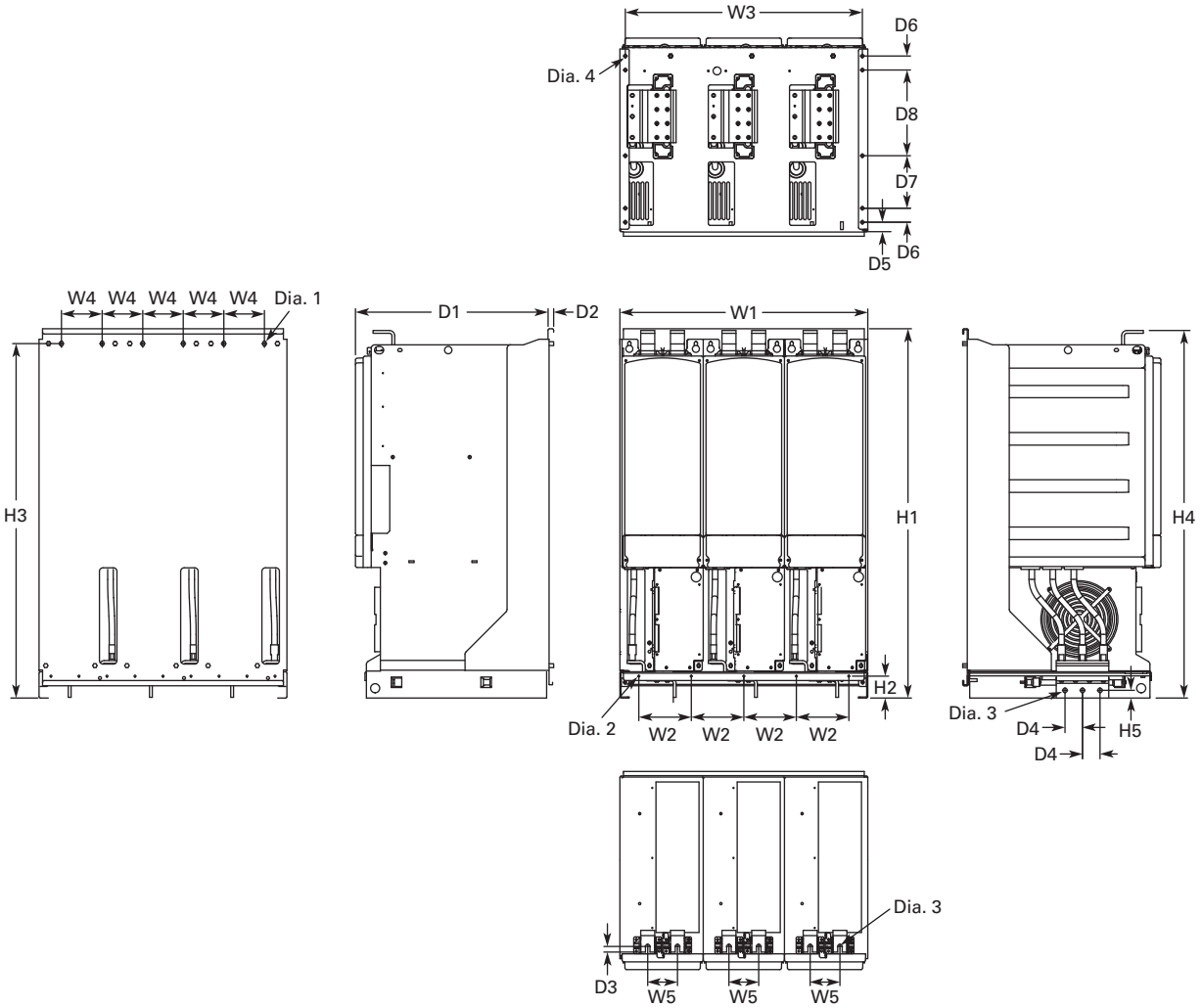

W1	W2	W3	W4	W5	H1	H2	H3	H4	H5	D1	D2	D3	D4	D5	D6	D7	D8	Dia. 1	Dia. 2	Dia. 3	Dia. 4	Weight Lbs (kg)
27.87 (708)	5.91 (150)	26.65 (677)	4.57 (116)	3.35 (85)	41.54 (1055)	2.46 (62.5)	39.86 (1012.5)	41.34 (1050)	0.79 (20)	21.77 (553)	0.51 (13)	0.63 (16)	1.97 (50)	1.06 (27)	1.57 (40)	5.91 (150)	9.64 (244.8)	0.35x0.59 (9x15)	0.18 (4.6)	0.51 (13)	0.37 (9.5)	683 (310)

Notes

9000X FR14 is built of two FR13 modules. Please refer to SPX9000 installation manual for mounting instructions.

FR13 is built from an inverter module and a converter module. Please refer to SPX9000 installation manual for mounting instructions.

Approximate Dimensions in Inches (mm)

FR13, Open Chassis Converter

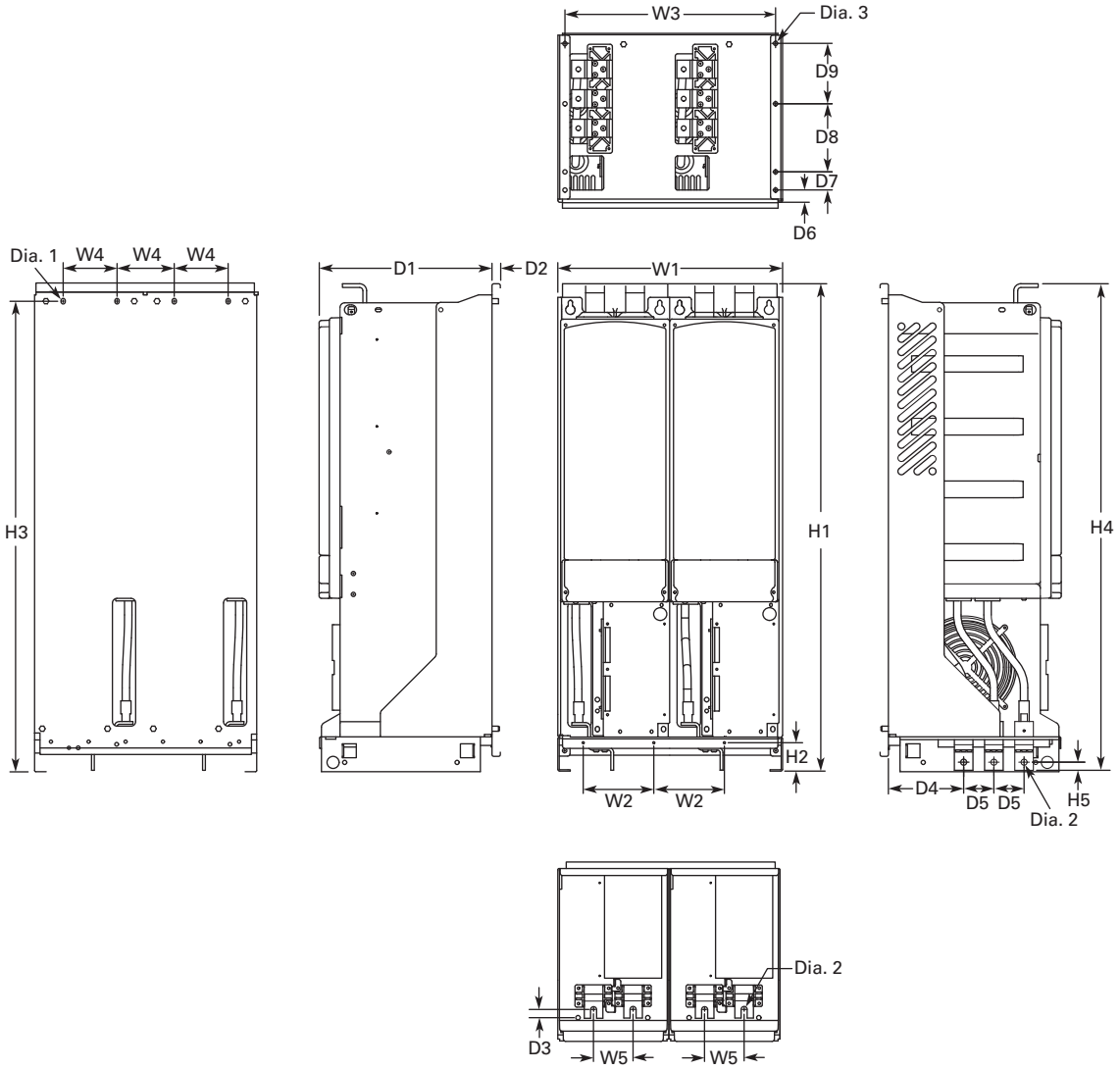

W1	W2	W3	W4	W5	H1	H2	H3	H4	H5	D1	D2	D3	D4	D5	D6	D7	D8	D9	Dia. 1	Dia. 2	Dia. 3	Weight Lbs (kg)
18.74 (476)	5.91 (150)	17.52 (445)	4.57 (116)	3.35 (85)	41.54 (1055)	2.46 (62.5)	39.86 (1012.5)	41.34 (1050)	0.69 (17.5)	14.69 (373)	0.51 (13)	0.73 (18.5)	6.42 (163)	2.56 (65)	1.06 (27)	1.57 (40)	5.91 (150)	5.24 (133)	0.35x0.59 (9x15)	0.51 (13)	0.37 (9.5)	295 (134)

Number of Input Units

480V Catalog Number	hp	Input Modules
SPX800A0-4A2N1	800	2

690V Catalog Number	hp	Input Modules
SPX800A0-5A2N1	800	2
SPX900A0-5A2N1	900	2
SPXH10A0-5A2N1	1000	2

Approximate Dimensions in Inches (mm)

FR13, Open Chassis Converter—900/1000 hp 480V

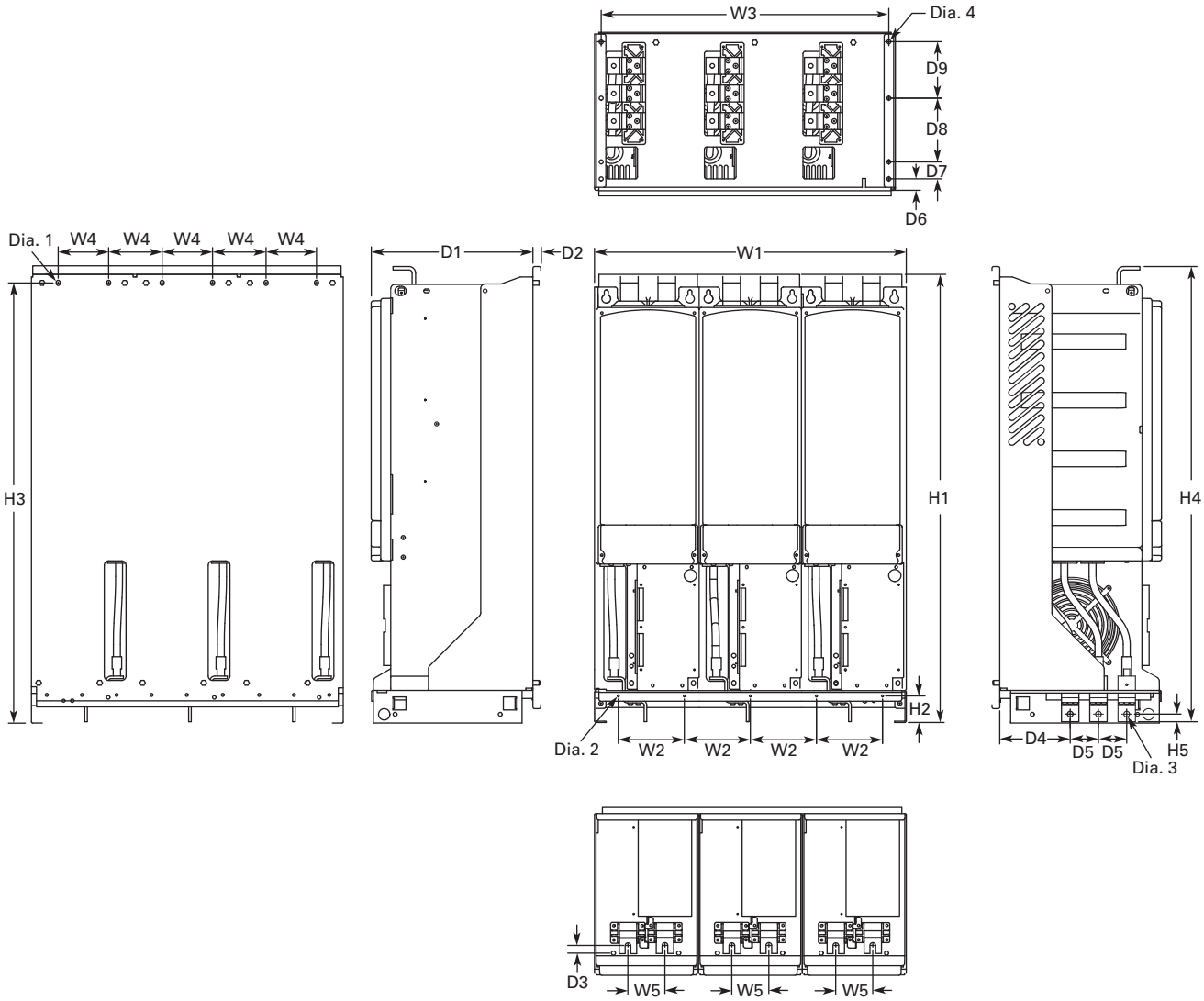

W1	W2	W3	W4	W5	H1	H2	H3	H4	H5	D1	D2	D3	D4	D5	D6	D7	D8	D9	Dia. 1	Dia. 2	Dia. 3	Dia. 4	Weight Lbs (kg)
27.87 (708)	5.91 (150)	26.65 (677)	4.57 (116)	3.35 (85)	41.54 (1055)	2.46 (62.5)	39.86 (1012.5)	41.34 (1050)	0.69 (17.5)	14.69 (373)	0.51 (13)	0.73 (18.5)	6.42 (163)	2.56 (65)	1.06 (27)	1.57 (40)	5.91 (150)	5.24 (133)	0.35x0.59 (9x15)	0.18 (4.6)	0.51 (13)	0.37 (9.5)	443 (201)

Number of Input Units

480V Catalog Number	hp	Input Modules
SPX900A0-4A2N1	900	3
SPXH10A0-4A2N1	1000	3

Approximate Dimensions in Inches (mm)

AC Choke Dimensions

Choke Types

Catalog Number	Frame Size	Choke Type ①
Voltage Range 380–500V		
SPX 250 4	FR10	CHK0400
SPX 300 4		CHK0520
SPX 350 4		CHK0520
SPX 400 4	FR11	2 x CHK0400
SPX 500 4		2 x CHK0400
SPX 550 4		2 x CHK0400
SPX 600 4	FR12	2 x CHK0520
SPX 650 4		2 x CHK0520
SPX 700 4		2 x CHK0520
SPX 800 4	FR13	2 x CHK0400
SPX 900 4		3 x CHK0520
SPX H10 4		3 x CHK0520
SPX H12 4	FR14	4 x CHK0520
SPX H16 4		6 x CHK0400

Catalog Number	Frame Size	Choke Type ①
Voltage Range 525–690V		
SPX 200 5	FR10	CHK0261
SPX 250 5		CHK0400
SPX 300 5		CHK0400
SPX 400 5	FR11	CHK0520
SPX 450 5		CHK0520
SPX 500 5		2 x CHK0400
SPX 550 5	FR12	2 x CHK0400
SPX 600 5		2 x CHK0400
SPX 700 5		2 x CHK0400
SPX 800 5	FR13	2 x CHK0400
SPX 900 5		2 x CHK0400
SPX H10 5		2 x CHK0400
SPX H13 5	FR14	4 x CHK0400
SPX H15 5		6 x CHK0400

CHK0520

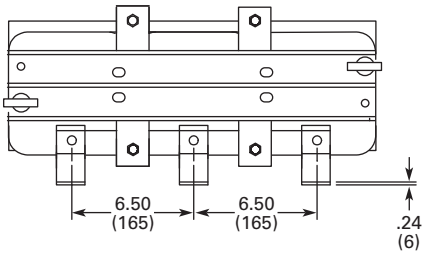

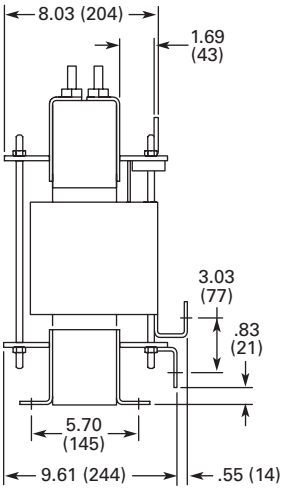

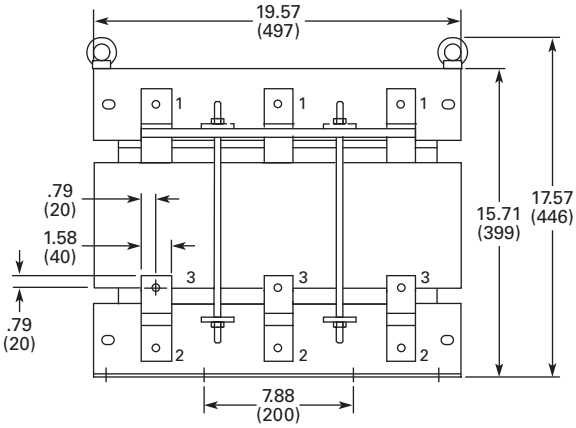

Note

① Chokes are provided with all FR10–FR14 drives.

Approximate Dimensions in Inches (mm)

CHK0400

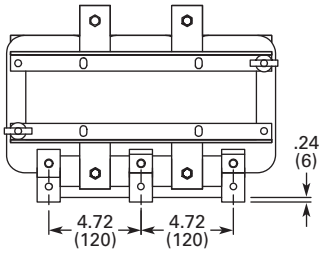

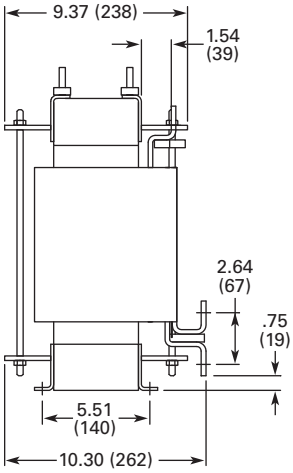

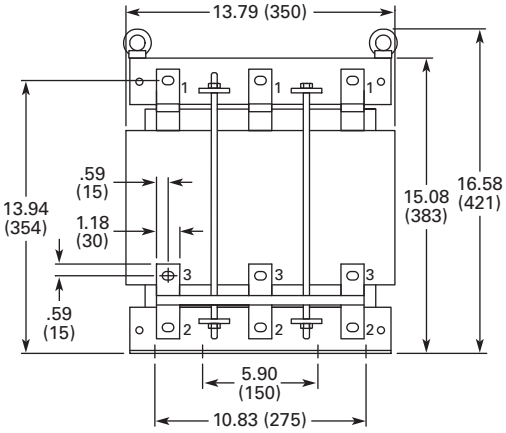

CHK0261

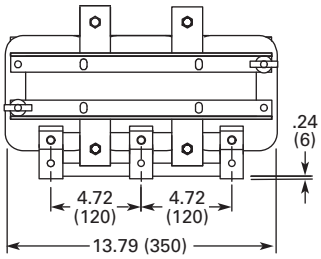

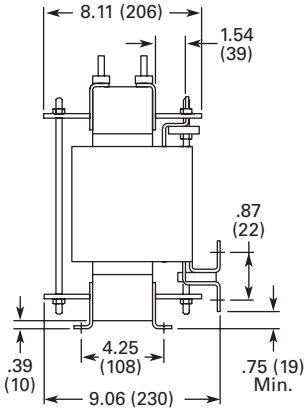

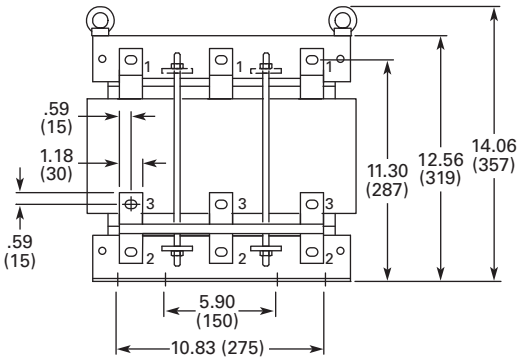

H-Max Series Drives

Contents

Description	*Page*
H-Max Series Drives	
H-Max Drives	**V6-T2-139**
H-Max IntelliPass and IntelliDisconnect Drives	**V6-T2-149**

Product Overview

H-Max Family Introduction

Eaton's H-Max™ Series VFD is the next generation of drives specifically engineered for HVAC pump and fluid control applications. The H-Max family of products boasts industry leading energy efficiency algorithms for your applications. Not only are the drives ultra-efficient—they contain software that minimizes motor winding energy loses in your applications. Designed for easy installation, simple startup, and long life; the H-Max Series drive family provides exceptional value to our customers,

Product Range

Open Style Drives:

- 0.75–125 hp at 230 Vac
- 1.5–250 hp at 480 Vac

Note: Available in NEMA 1 or NEMA 12 designs.

IntelliPass/IntelliDisconnect Drives:

- 1–30 hp at 208 Vac
- 1–30 hp at 230 Vac
- 1–75 hp at 480 Vac

Note: Available in NEMA 1, NEMA 12, or NEMA 3R enclosures.

Application Description

The H-Max Series drive was designed specifically for HVAC pump and fluid control applications. It is intended to be used on variable torque loads with the intent of moving air or liquids. With this in mind, the H-Max drive has onboard I/O pre-programmed to meet the common needs for these applications. The H-Max drive supports items such as standard speed control, PID functionality, as well as multi-motor applications. The drive easily supports interlock, second motor parameter set, as well as fire mode functionality.

Key Feature

Active Energy Control Algorithm

Eaton's H-Max Series drives have been designed to provide industry leading energy saving solutions. Not only is the drive ultra-efficient, the drive seeks the most efficient operating point of the motor, minimizing energy loss in the windings per the given load requirements. This is an Eaton protected control algorithm exclusive to H-Max drives.

H-Max Drives

Contents

Description	*Page*
H-Max Drives	
Catalog Number Selection	**V6-T2-140**
Product Selection	**V6-T2-141**
Accessories	**V6-T2-144**
Replacement Parts	**V6-T2-145**
Technical Data and Specifications	**V6-T2-146**
Wiring Diagram	**V6-T2-147**
Dimensions	**V6-T2-148**
H-Max IntelliPass and IntelliDisconnect Drives	**V6-T2-149**

H-Max Drives

Product Description

Eaton's H-Max Series VFD has software and hardware designed specifically for the HVAC, pump industry. The ultra-efficient DC capacitor and power structure allows the drive to consume less energy, lowering greenhouse gases.

The I/O configuration is designed with wiring ergonomics in mind by including removable terminal blocks. The main, easily removable, control board used for all drive frames with six digital IN, two analog IN, one analog OUT, three relay OUT accepts two additional I/O or communication board. In addition, the control board has built-in RS-485 and Ethernet communication.

These drives continue the tradition of robust performance, and raise the bar on features and functionality, ensuring the best solution at the right price.

In addition to the Active Energy Control Algorithm to maximize motor efficiency, the drive boasts an ultra-efficient DC capacitor and power structure to allow less energy consumption, lowering greenhouse gases.

Features and Benefits

Hardware

- Thin metal capacitor design—ultra-efficient drive operation and extended self life (up to five years without reforming)
- Integrated 5% DC link choke with Input surge protection—protects against voltage spikes and provides a clean wave form to the motor
- EMI/RFI filters standard on all drives—meets EMC Category 2 for commercial applications
- Real-time clock—supports calendaring and PLC functionality
- Graphic LCD display and keypad—supports simple menu navigation as well as on-screen diagnostics and troubleshooting
- HAND-OFF-AUTO and drive-bypass selector on keypad—simplifies control
- Standard I/O: 6DI, 2AI, 1AO, 2 Form C RO (NO/NC), 1 Form A RO (NO)—supports requirements for most installations
- Onboard RS 485: Modbus, N2, BACnet—meets needs of most communication requirements
- Onboard Ethernet: BACnet/IP, Modbus/TCP—meets needs of most communication requirements
- Two expansion slots—intended to support additional I/O or communication protocols as necessary
- Quick disconnect terminals for I/O connections—supports fast easy installation

Software

- Active energy control—minimizes energy losses in your motor resulting in industry leading energy efficiency for your application
- Quick Start Wizard upon initial power up—supports fast easy installation
- Copy/paste functionality on drive keypad—allows for fast setup of multiple drives
- Pre-programmed I/O—supports fast easy installation for most applications

Standards and Certifications

Product

- IEC 61800-5-1
- CE
- cUL

Safety

- UL 508C
- EN 61800-5-1
- CE
- cUL

- C-Tick Mark

Catalog Number Selection

H-Max Series Drives

HMX 3 4 A G 3D4 2 1 - N

Product
HMX = HVAC drive

Phase
3 = Three-phase

Voltage
2 = 200–240V
4 = 380–480V

Software Series
A–Z

Keypad
G = Graphical panel

Amperes

200–240 Volts		380–480 Volts	
3D7 = 3.7A–0.75 hp, 0.55 kW	**062** = 62A–20 hp, 15 kW	**3D4** = 3.4A–1.5 hp, 1.1 kW	**046** = 46A–30 hp, 22 kW
4D8 = 4.8A–1 hp, 0.75 kW	**075** = 75A–25 hp, 18.5 kW	**4D8** = 4.8–2 hp, 1.5 kW	**061** = 61A–40 hp, 30 kW
6D6 = 6.6A–1.5 hp, 1.1 kW	**088** = 88A–30 hp, 22 kW	**5D6** = 5.6A–3 hp, 2.2 kW	**072** = 72A–50 hp, 37 kW
8D0 = 8A–2 hp, 1.5 kW	**105** = 105A–40 hp, 30 kW	**8D0** = 8A–4 hp, 3 kW	**087** = 87A–60 hp, 45 kW
011 = 11A–3 hp, 2.2 kW	**140** = 140A–50 hp, 37 kW	**9D6** = 9.6A–5 hp, 4 kW	**105** = 105A–75 hp, 55 kW
012 = 12A–4 hp, 3 kW	**170** = 170A–60 hp, 45 kW	**012** = 12A–7.5 hp, 5.5 kW	**140** = 140A–100 hp, 75 kW
018 = 18A–5 hp, 4 kW	**205** = 205A–75 hp, 55 kW	**016** = 16A–10 hp, 7.5 kW	**170** = 170A–125 hp, 90 kW
024 = 24A–7.5 hp, 5.5 kW	**261** = 261A–100 hp, 75 kW	**023** = 23A–15 hp, 11 kW	**205** = 205A–150 hp, 110 kW
031 = 31A–10 hp, 7.5 kW	**310** = 310A–125 hp, 90 kW	**031** = 31A–20 hp, 15 kW	**261** = 261A–200 hp, 132 kW
048 = 48A–15 hp, 11 kW		**038** = 38A–25 hp, 18.5 kW	**310** = 310A–250 hp, 160 kW

Braking/Application
N = No brake chopper (low overload)

Enclosure
1 = Open NEMA Type 1 IP21
2 = Open NEMA Type 12 IP54

Input Options Frame and Voltage Specific
2 = EMC C2

Notes

All boards are varnished (conformed coated). Corrosion resistant.
Battery included in all drives for real-time clock.
Keypad kit includes HOA bypass.
Keypad kit includes HOA, back reset for Europe application.
EMI/RFI filters included.
DC link choke included.

Product Selection

H-Max Series Drives—230 Vac

NEMA Type 1

NEMA Type 1/IP21

FS Frame Size	Drive Output Current Low Overload Full Load Amps at 40°C	Horsepower	Assigned Motor Ratings Drive kW 230 Vac/50 Hz	230 Vac NEC Amps ①	Low Overload Full Load Amps at 50°C	Catalog Number
4	3.7	0.75	0.55	3.2	2.6	**HMX32AG3D721-N**
	4.8	1	0.75	4.2	3.7	**HMX32AG4D821-N**
	6.6	1.5	1.1	6.6	4.8	**HMX32AG6D621-N**
	8	2	1.5	6.8	6.6	**HMX32AG8D021-N**
	11	3	2.2	9.6	8	**HMX32AG01121-N**
	12.5	4	3	N/A	11	**HMX32AG01221-N**
5	18	5	4	15.2	12.5	**HMX32AG01821-N**
	24	7.5	5.5	22	18	**HMX32AG02421-N**
	31	10	7.5	28	24	**HMX32AG03121-N**
6	48	15	11	42	31	**HMX32AG04821-N**
	62	20	15	54	48	**HMX32AG06221-N**
7	75	25	18.5	68	62	**HMX32AG07521-N**
	88	30	22	80	75	**HMX32AG08821-N**
	105	40	30	104	88	**HMX32AG10521-N**
8	140	50	37	130	105	**HMX32AG14021-N**
	170	60	45	154	140	**HMX32AG17021-N**
	205	75	55	192	170	**HMX32AG20521-N**
9	261	100	75	248	205	**HMX32AG26121-N**
	310	125	90	N/A	261	**HMX32AG31021-N**

NEMA Type 12

NEMA Type 12/IP54

FS Frame Size	Drive Output Current Low Overload Full Load Amps at 40°C	Horsepower	Assigned Motor Ratings Drive kW 230 Vac/50 Hz	230 Vac NEC Amps ①	Low Overload Full Load Amps at 50°C	Catalog Number
4	3.7	0.75	0.55	3.2	2.6	**HMX32AG3D722-N**
	4.8	1	0.75	4.2	3.7	**HMX32AG4D822-N**
	6.6	1.5	1.1	6.6	4.8	**HMX32AG6D622-N**
	8	2	1.5	6.8	6.6	**HMX32AG8D022-N**
	11	3	2.2	9.6	8	**HMX32AG01122-N**
	12.5	4	3	N/A	11	**HMX32AG01222-N**
5	18	5	4	15.2	12	**HMX32AG01822-N**
	24	7.5	5.5	22	18	**HMX32AG02422-N**
	31	10	7.5	28	24	**HMX32AG03122-N**
6	48	15	11	42	31	**HMX32AG04822-N**
	62	20	15	54	48	**HMX32AG06222-N**
7	75	25	18.5	68	62	**HMX32AG07522-N**
	88	30	22	80	75	**HMX32AG08822-N**
	105	40	30	104	88	**HMX32AG10522-N**
8	140	50	37	130	105	**HMX32AG14022-N**
	170	60	45	154	140	**HMX32AG17022-N**
	205	75	55	192	170	**HMX32AG20522-N**
9	261	100	75	248	205	**HMX32AG26122-N**
	310	125	90	N/A	261	**HMX32AG31022-N**

Note

① For sizing reference.

H-Max Series Drives—480 Vac

NEMA Type 1

NEMA Type 1/IP21

FS Frame Size	Drive Output Current Low Overload Full Load Amps at 40°C	Horsepower	Assigned Motor Ratings Drive kW 400 Vac/50 Hz	480 Vac NEC Amps ①	Low Overload Full Load Amps at 50°C	Catalog Number
4	3.4	1.5	1.1	2.1	2.6	**HMX34AG3D421-N**
	4.8	2	1.5	3.4	3.4	**HMX34AG4D821-N**
	5.6	3	2.2	5.6	4.8	**HMX34AG5D621-N**
	8.0	4	3.0	N/A	5.6	**HMX34AG8D021-N**
	9.6	5	4	7.6	8	**HMX34AG9D621-N**
	12	7.5	5.5	11	9.6	**HMX34AG01221-N**
5	16	10	7.5	14	12	**HMX34AG01621-N**
	23	15	11	21	16	**HMX34AG02321-N**
	31	20	15	27	23	**HMX34AG03121-N**
6	38	25	18.5	34	31	**HMX34AG03821-N**
	46	30	22	40	38	**HMX34AG04621-N**
	61	40	30	52	46	**HMX34AG06121-N**
7	72	50	37	65	61	**HMX34AG07221-N**
	87	60	45	77	72	**HMX34AG08721-N**
	105	75	55	96	87	**HMX34AG10521-N**
8	140	100	75	124	105	**HMX34AG14021-N**
	170	125	90	156	140	**HMX34AG17021-N**
	205	150	110	180	170	**HMX34AG20521-N**
9	261	200	132	240	205	**HMX34AG26121-N**
	310	250	160	302	261	**HMX34AG31021-N**

NEMA Type 12

NEMA Type 12/IP54

FS Frame Size	Drive Output Current Low Overload Full Load Amps at 40°C	Horsepower	Assigned Motor Ratings Drive kW 400 Vac/50 Hz	480 Vac NEC Amps ①	Low Overload Full Load Amps at 50°C	Catalog Number
4	3.4	1.5	1.1	2.1	2.6	**HMX34AG3D422-N**
	4.8	2	1.5	3.4	3.4	**HMX34AG4D822-N**
	5.6	3	2.2	5.6	4.8	**HMX34AG5D622-N**
	8.0	4	3.0	N/A	5.6	**HMX34AG8D022-N**
	9.6	5	4	7.6	8	**HMX34AG9D622-N**
	12	7.5	5.5	11	9.6	**HMX34AG01222-N**
5	16	10	7.5	14	12	**HMX34AG01622-N**
	23	15	11	21	16	**HMX34AG02322-N**
	31	20	15	27	23	**HMX34AG03122-N**
6	38	25	18.5	34	31	**HMX34AG03822-N**
	46	30	22	40	38	**HMX34AG04622-N**
	61	40	30	52	46	**HMX34AG06122-N**
7	72	50	37	65	61	**HMX34AG07222-N**
	87	60	45	77	72	**HMX34AG08722-N**
	105	75	55	96	87	**HMX34AG10522-N**
8	140	100	75	124	105	**HMX34AG14022-N**
	170	125	90	156	140	**HMX34AG17022-N**
	205	150	110	180	170	**HMX34AG20522-N**
9	261	200	132	240	205	**HMX34AG26122-N**
	310	250	160	302	261	**HMX34AG31022-N**

Note

① For sizing reference.

Onboard Network Communications

Johnson Controls Metasys N2

H-Max Series provides communication between the drive and a Johnson Controls Metasys™ N2 network. With this connection, the drive can be controlled, monitored and programmed from the Metasys system. N2 can be selected and programmed by the drive keypad.

BACnet

H-Max Series provides communication to BACnet networks. Data transfer is master-slave/token passing (MS/TP) RS-485.

BACnet IP

100 base T interface.

Modbus TCP

Ethernet based protocol.

Modbus RTU

H-Max Series provides communication to Modbus RTU RS-485 as a slave on a Modbus network. Other communication parameters include an address range from 1–247; a parity of None, Odd or Even; and the stop bit is 1.

H-Max Series Option Board Kits Available for Slot B

The factory issued relay option board can be replaced with the following option boards to customize the drive for your application needs.

The standard board provides 2 Form C RO (NO/NC) and 1 Form A RO (NO).

Option Boards Mounted in Slot B

Option Kit Description	Option Kit Catalog Number
I/O expander card, 2 RO and thermistor input	**Relay Board 2**

H-Max Series Option Board Kits Available for Slots D and E

The H-Max Series drives can accommodate a wide selection of expander and adapter option boards to customize the drive for your application needs. The drive's control unit is designed to accept a total of two option boards.

The H-Max Series factory-installed standard board configuration includes an I/O board and a relay output board.

Option Boards Mounted in Slots D and E

Option Kit Description	Option Kit Catalog Number
6 x DI /DO, each digital input can be individually programmed as digital output	**XMX-IO-B1-A**
1RO Form C (NO/NC), 1RO Form A (NO), 1 thermistor	**XMX-IO-B2-A**
1 x AI, 2 x AO (isolated)	**XMX-IO-B4-A**
3 x RO Form A (NO)	**XMX-IO-B5-A**
1RO Form A (NO), 5DI 42–240 Vac input	**XMX-IO-B9-A**
1 x AO, 1 x DO, 1 x RO	**XMX-IO-BF-A**
LonWorks®	**XMX-COM-C4-A**

NEMA Type 1 to NEMA Type 12/IP54 Conversion Kit

The NEMA Type 12/IP54 option kit is used to convert a NEMA Type 1 to a NEMA Type 12 drive.

Kit consists of a drive cover, fan kit and plugs.

NEMA Type 12/IP54 Cover

Option Kit Description	Option Kit Catalog Number
FS4-branded N12/IP54 cover with gasket, plastic plug, fans, Eaton logos	**FS4-N12KIT**
FS5-branded N12/IP54 cover with gasket, plastic plug, fans, Eaton logos	**FS5-N12KIT**
FS6-branded N12/IP54 cover with gasket, plastic plug, fans, Eaton logos	**FS6-N12KIT**

Accessories

Flange Kits

The flange kit is used when the power section heat sink is mounted through the back panel of an enclosure.

Flange Kit NEMA Type 1/IP21

Includes flange, mounting brackets, and screws.

Flange Kit NEMA Type 12/IP54

Includes flange, mounting brackets, NEMA Type 12 fan components, air shroud screws and plugs.

Frames FS4–FS9 ①②

Description	Catalog Number
NEMA Type 12/IP54	
FS4 N12/IP54 flange kit (mounting N1 drive into N12 enclosure)	**FS4-Flange-N12KIT**
FS5 N12/IP54 flange kit (mounting N1 drive into N12 enclosure)	**FS5-Flange-N12KIT**
FS6 N12/IP54 flange kit (mounting N1 drive into N12 enclosure)	**FS6-Flange-N12KIT**
FS7 N12/IP54 flange kit (mounting N1 drive into N12 enclosure)	**FS7-Flange-N12KIT**

Keypad Accessories

Remote Mounting Keypad Kit

Frames FS4–FS9

Description	Catalog Number
Remote mounting keypad kit—bezel and cable	**OPTRMT-BP-HMAX**

Drive Demo

H-Max Series Drive Demo

Demos and Power Supply

Description	Catalog Number
H-Max Series drive demo	**H-MAX-DEMO**
H-Max Series bypass demo	**H-MAX-BYPASS-DEMO**
Hand-held 24V auxiliary power supply—used to supply power to the control module in order to perform keypad programming before the drive is connected to line voltage	**9000XAUX24V**

Notes

① For installation of a NEMA Type 1 drive into a NEMA Type 12 oversized enclosure.
② Frame size 8 and 9 must be ordered from the factory as a flange mount unit.

Replacement Parts

Control Board/Keypad

Description	Current Catalog Number
H-Max Series graphic bypass, HOA	**KeypadbypassHOA**
H-Max Series graphic back, HOA	**KeypadbackHOA**

PC Cable

Description	Catalog Number
Remote download USB to RJ-45 cable with software driver disk	**REM-USB-Down**

Replacement Relay Board in Slot B

Description	Catalog Number
Replacement relay board qty 2 Form C relay, qty 1 Form A relay	**Relay board 1**

Main Fan

Description	Catalog Number
FS4 main fan	**FS4-Main Fan**
FS5 main fan	**FS5-Main Fan**
FS6 main fan	**FS6-Main Fan**
FS7 main fan	**FS7-Main Fan**

Internal Fan

Description	Catalog Number
FS4 internal fan (IP54/NEMA 12)	**FS4-Internal Fan**
FS5 internal fan (IP54/NEMA 12)	**FS5-Internal Fan**
FS6 internal fan (IP54/NEMA 12)	**FS6-Internal Fan**
FS7 internal fan (IP54/NEMA 12)	**FS7-Internal Fan**

Technical Data and Specifications

H-Max Series Drives

Description	Specification
Input Ratings	
Input voltage (V_{in})	200–240 Vac, 380–480 Vac, –10%/+10%
Input frequency (f_{in})	50/60 Hz (variation up to 47–66 Hz)
Connection to power	Once per minute or less (typical operation)
Short circuit withstand rating	100 kAIC
Output Ratings	
Output voltage	0 to V_{in}/U_{in} line voltage in
Continuous output current	Ambient temperature max. 104°F (40°C)
I_L overload	1.1 x I_L (1 min./10 min.)
Overload current	110% (1 min./10 min.)
Initial output current	150% for two seconds
Output frequency	0 to 320 Hz
Frequency resolution	0.01 Hz
Control Characteristics	
Control method	Frequency control (V/f) open loop sensorless vector control
Switching frequency	1–310 amps FS4–9: default 6 kHz
Frequency reference	Analog input: Resolution 0.1% (10-bit), accuracy ±1% Panel reference: Resolution 0.01 Hz
Field weakening point	8 to 320 Hz
Acceleration time	0.1 to 3000 seconds
Deceleration time	0.1 to 3000 seconds
Braking torque	DC brake: 30% x T_n
Ambient Conditions	
Ambient operating temperature	FS4–FS9: 14°F (–10°C), no frost to 104°F (40°C) (Drive can operate at 122°F (50°C), see **Pages V6-T2-141** and **V6-T2-142**)
Storage temperature	–40° to 158°F (–40° to 70°C)
Relative humidity	0 to 95% RH, noncondensing, non-corrosive, no dripping water
Air quality	Chemical vapors: IEC 60721-3-3, unit in operation, Class 3C2; Mechanical particles: IEC 60721-3-3, unit in operation, Class 3S2
Altitude	100% load capacity (no derating) up to 3280 ft (1000m); 1% derating for each 328 ft (100m) above 3280 ft (1000m); max. 9842 ft (3000m); 380–480V
Vibration	FS4–FS9: EN 61800-5-1, EN 60068-2-6; 5 to 150 Hz, displacement amplitude 1 mm (peak) at 5 to 15.8 Hz, max. acceleration amplitude 1G at 15.8 to 150 Hz
Shock	EN 61800-5-1, EN 60068-2-27 UPS Drop test (for applicable UPS weights) Storage and shipping: max. 15G, 11 ms (in package)
Enclosure class	NEMA Type 1/IP21 or NEMA Type 12/IP54 (keypad required for IP54/Type 12)
Standards	
EMC	Immunity: Fulfills all EMC immunity requirements; Emissions: EN 61800-3, LEVEL H (EMC C2)
Emissions	EMC level dependent— +EMC 2: EN61800-3 (2004) Category C2 Delivered with Class C2 EMC filtering as default.

Description	Specification
Control Connections	
Analog input voltage	0 to 10V, R = 200 kohms differential Resolution 0.1%; Accuracy ±1% Dip switch selection (voltage/current)
Analog input current	0(4) to 20 mA; R_i –250 ohms differential
Digital inputs (6)	Positive or negative logic; 18 to 30 Vdc
Auxiliary voltage	+24V ±10%, max. 250 mA
Output reference voltage	+10V +3%, max. load 10 mA
Analog output	0–10V, 0(4) to 20 mA; R_L max. 500 ohms; Resolution 10 bit; Accuracy ±2% Dip switch selection (voltage/current)
Relay outputs	3 programmable, 2 Form C, 1 Form A relay outputs Switching capacity: 24 Vdc/8A, 250 Vac/8A, 125 Vdc/0.4A
Hard wire jumper	Between terminal 6 and 10 factory default
Dip switch setting default	RS485 = off A01 = current A12 = current A11 = voltage
Protections	
Overcurrent protection	Yes
Overvoltage protection	Yes
DC bus regulation anti-trip	Yes (accelerates or decelerates the load)
Undervoltage protection	Yes
Earth fault protection	Yes (in case of earth fault in motor or motor cable, only the frequency converter is protected)
Input phase supervision	Yes (trips if any of the input phases are missing)
Motor phase supervision	Yes (trips if any of the output phases are missing)
Overtemperature protection	Yes
Motor overload protection	Yes
Motor stall protection	Yes
Motor underload protection	Yes
Short circuit protection	Yes
Surge protection	Yes (varistor input)
Conformed coated (varnished) boards	Yes (prevents corrosion)

Wiring Diagram

Control Input/Output, PID Application

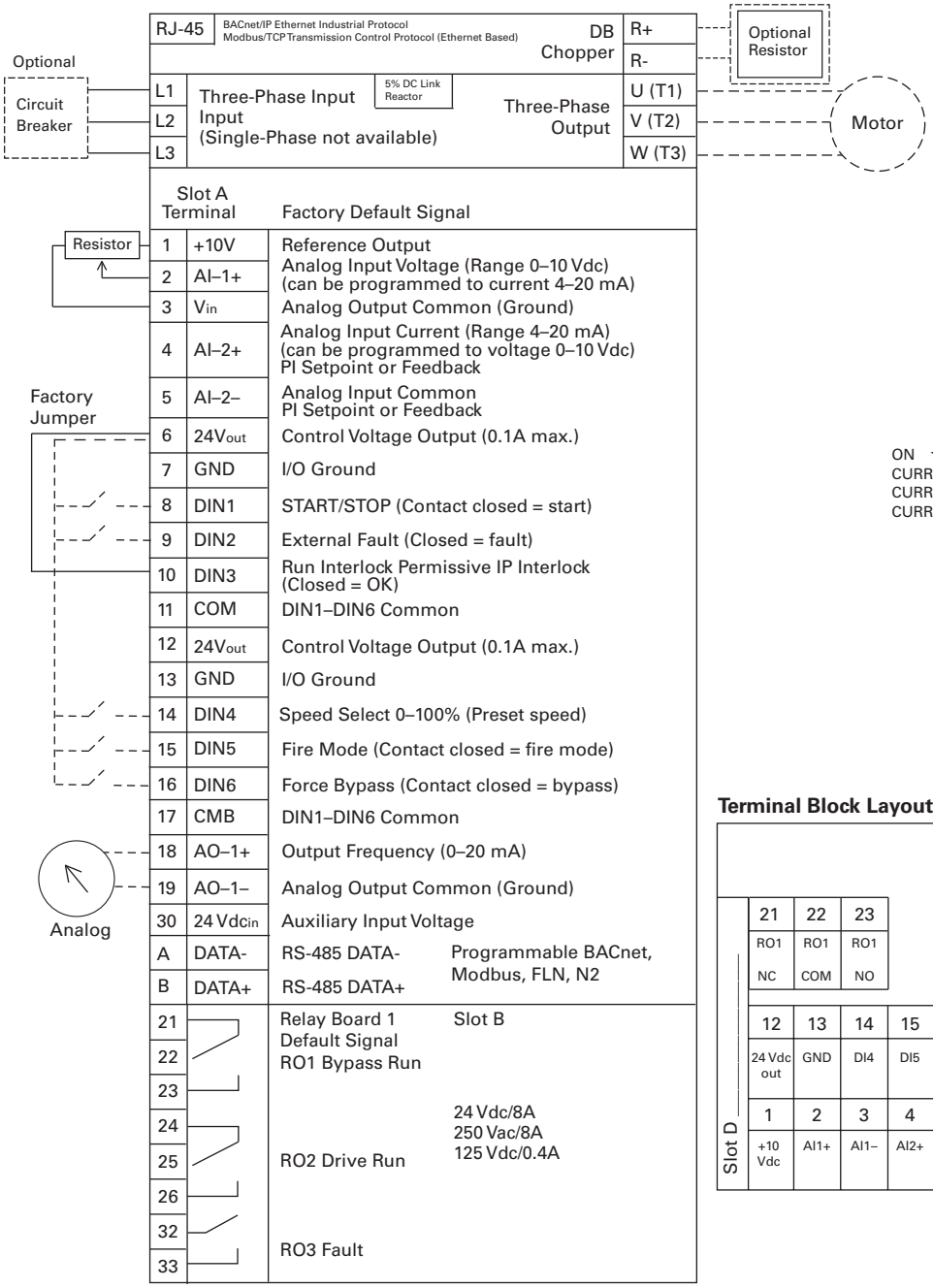

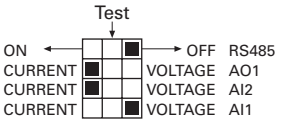

Terminal Block Layout

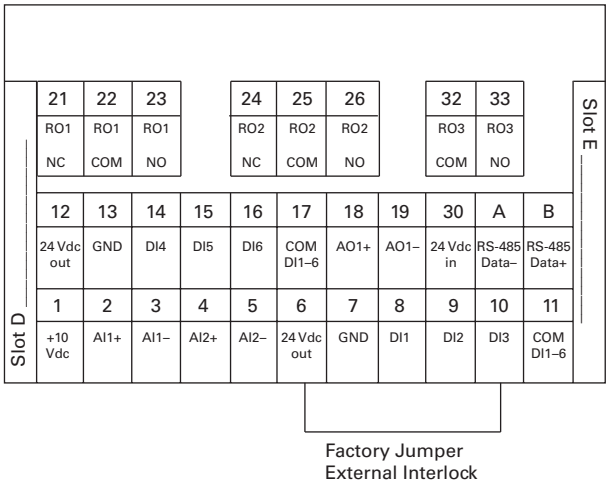

Standards

- Digital inputs D1–D6, relay out, analog in/out are freely programmed
- The user can assign a single input to multiple functions

Includes

- Six digital input
- Two analog input
- One analog output
- Three relay output
- RS-485
- Ethernet (BACnet and Modbus)

Reliability

- Pretested components
- Conformal coated (varnished) boards
- 40°C rated
- 110% overload for one minute
- Eaton Electrical Services & Systems national network of AF drive specialists

Dimensions

Approximate Dimensions in Inches (mm)

H-Max Series Frames FS4–FS7

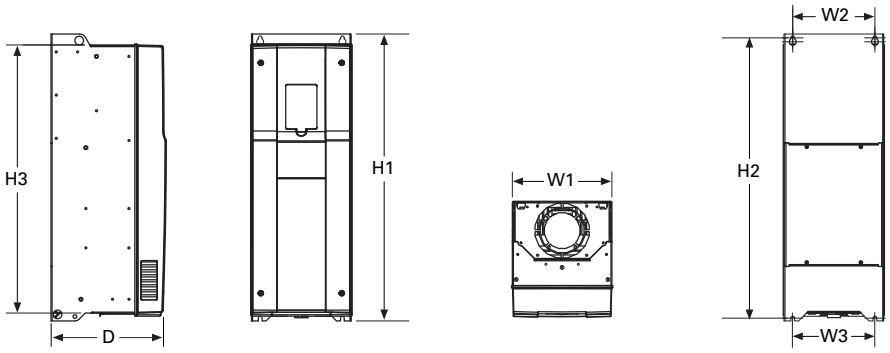

Voltage	hp	kW	Amps	D	H1	Hole Center-to-Center H2	H3	W1	W2	W3	Weight in Lbs (kg)
FS4											
230 Vac	0.75–4	0.55–3.0	3.7–12.5	7.77 (197.3)	12.89 (327.5)	12.32 (313.0)	11.22 (285.0)	5.04 (128.0)	3.94 (100.0)	3.94 (100.0)	13.2 (6)
480 Vac	1.5–7.5	1.1–5.5	3.4–12								
FS5											
230 Vac	5–10	4–7.5	18–31	8.73 (221.6)	16.50 (419.0)	15.98 (406.0)	15.04 (382.0)	5.67 (144.0)	4.53 (115.0)	3.94 (100.0)	22.0 (10)
480 Vac	10–20	7.5–15	16–31								
FS6											
230 Vac	15–20	11–15	48–62	9.29 (236.0)	21.93 (557.0)	21.28 (540.5)	20.24 (514.0)	7.68 (195.0)	5.83 (148.0)	5.83 (148.0)	44.1 (20)
480 Vac	25–40	18.5–30	38–61								
FS7											
230 Vac	25–30	18.5–30	75–105	10.49 (266.5)	25.98 (660.0)	25.39 (645.0)	24.29 (617.0)	9.06 (230.0)	7.48 (190.0)	7.48 (190.0)	82.6 (37.5)
480 Vac	50–75	37–55	72–105								

H-Max Series Frames FS8 and FS9

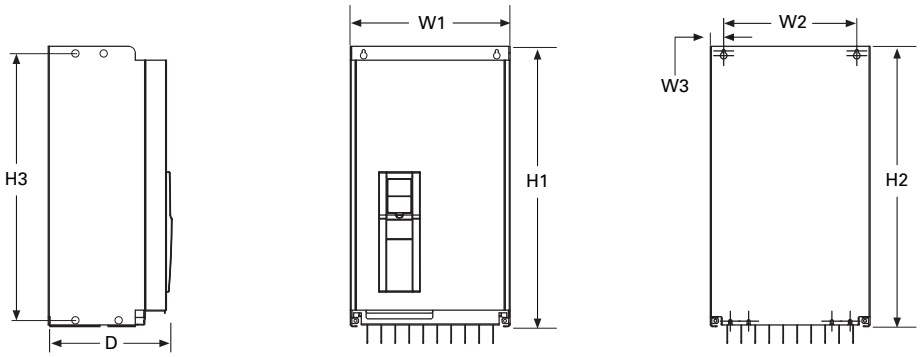

Voltage	hp	kW	Amps	D	H1	Hole Center-to-Center H2	H3	W1	W2	W3	Weight in Lbs (kg)
FS8											
230 Vac	50–75	37–55	140–205	13.76 (349.6)	38.02 (965.7)	37.26 (946.4)	37.26 (946.4)	11.42 (290.1)	9.29 (236.0)	1.42 (36.0)	154.3 (70)
480 Vac	100–150	75–110									
FS9											
230 Vac	100–120	75–90	261–310	14.63 (371.6)	33.09 (890.4)	31.89 (810.0)	31.89 (810.0)	18.90 (480.0)	15.75 (400.0)	1.57 (40.0)	238.1 (108)
480 Vac	200–250	132–160									

Note: For flange dimension, please reference User Manual.

H-Max IntelliPass and IntelliDisconnect Drives

Contents

Description	*Page*
H-Max Drives	**V6-T2-139**
H-Max IntelliPass and IntelliDisconnect Drives	
Catalog Number Selection	**V6-T2-150**
Product Selection	**V6-T2-151**
Technical Data and Specifications	**V6-T2-155**
Wiring Diagrams	**V6-T2-156**
Dimensions	**V6-T2-158**

H-Max IntelliPass and IntelliDisconnect Drives

Product Description

The IntelliPass electronic bypass is a two or optional three contactor design using a 24 Vdc ***XT*** Series contactor with an optional manual override switch that allows the unit to run in bypass without the H-Max Series drive.

The IntelliPass software parameters utilize engineering units common to the HVAC industry. Onboard startup wizard guarantees flawless commissioning with plug-and-play screen entry. Available in NEMA/UL Type 1 and 12 with optional pre-engineered operator devices to meet all customized specification requirements.

The IntelliPass construction features allow for easy installation, reliable operation and serviceability with additional onboard wire space and removable conduit plates with knockouts.

Features and Benefits

Industry leading energy saving solution—uses the Eaton H-Max drive with Active Energy Control algorithm.

Built to be as tough as the application—Eaton's robust design boasts an industrial grade enclosure and industry proven components.

- PSG Industrial Power Supply
- ***XT*** Contactors
- 22 mm Pilot Devices

Designed with Our Customers in Mind

- Removable top and bottom entry panels
- Door mounted graphic display and keypad
- Easily accessible connection terminals with removable I/O terminal connections

Engineered Product Solution

- The Eaton H-Max IntelliPass and IntelliDisconnect products are available with a variety of factory tested and certified options meeting or exceeding UL508C requirements

Standards and Certifications

Product

- IEC 61800-5-1
- CE
- cUL

Safety

- UL 508C
- EN 61800-5-1
- CE
- cUL

- Plenum Rated

Catalog Number Selection

H-Max Series IntelliPass and IntelliDisconnect Drives

HMX 011 3 4 N A _ _ _ _ _ _ _ _ _ _

Build options alphabetically and numerically.

Product

HMX = HVAC drive (VT) (low overload)

NEC Ampere Ratings

208 Volts	480 Volts
4D5 = 4.5A—1 hp	**2D1** = 2.1A—1 hp
7D5 = 7.5A—2 hp	**3D4** = 3.4A—2 hp
011 = 11A—3 hp	**5D6** = 5.6A—3 hp
017 = 17A—5 hp	**9D6** = 9.6A—5 hp
025 = 25A—7.5 hp	**011** = 11A—7.5 hp
031 = 31A—10 hp	**014** = 14A—10 hp
047 = 47A—15 hp	**021** = 21A—15 hp
060 = 60A—20 hp	**027** = 27A—20 hp
075 = 75A—25 hp	**034** = 34A—25 hp
088 = 88A—30 hp	**040** = 40A—30 hp
230 Volts	**052** = 52A—40 hp
4D2 = 4.2A—1 hp	**065** = 65A—50 hp
7D5 = 7.5A—2 hp	**077** = 77A—60 hp
9D6 = 9.6A—3 hp	**096** = 96A—75 hp
016 = 16A—5 hp	
022 = 22A—7.5 hp	
028 = 28A—10 hp	
042 = 42A—15 hp	
054 = 54A—20 hp	
068 = 68A—25 hp	
080 = 80A—30 hp	

Voltage

1 = 208V
2 = 230V
4 = 480V

Enclosure Style

3 = IntelliPass NEMA Type 1
4 = IntelliPass NEMA Type 12
5 = IntelliPass NEMA Type 3R
A = IntelliDisconnect NEMA Type 1
B = IntelliDisconnect NEMA Type 12
C = IntelliDisconnect NEMA Type 3R

Braking/Application

N = No brake chopper (low overload)

Software Series

A–Z

Extended I/O Options in Slot D and E

B1 = 6 x DI /DO, Each digital input can be individually programmed as digital output
B2 = 1RO (NC/NO), 1RO (NO), 1 Thermistor
B4 = 1 x AI, 2 x AO (isolated)
B5 = 3 x RO
B9 = 1RO (NO), 5 DI 42–240 Vac input
BF = Expander IO, 1 AO, 1 DO, 1 RO

Optional Communications in Slot D and E

C4 = LonWorks®

EMC Upgrade Option

EMC C2 Standard

Keypad Options

None available

IntelliDisconnect Options

L3 = Pilot lights (Power ON, RUN, Fault)
P3 = Fused drive isolation
PE = Output contactor
SA = Space heater w/transformer (Type 3R only)

IntelliPass Bypass Options

L4 = Pilot lights (Power ON, RUN, Fault, Bypass)
P3 = Fused drive isolation (can not be used with P6 or MI)
P6 = Third contactor drive isolation (cannot be used with P3, IS or MI)
M1 = Manual bypass, includes isolation contactor and pilot lights (not available with P3, L4, P6 or IS)
SA = Space heater w/transformer (Type 3R only)
K9 = Auxiliary contacts
IS = Isolation switch (cannot be used with P6 or MI)

Standard Onboard Communications

RS-485 Communications

BACnet MS/TP = Master slave/token protocol (Universal BACnet) RS-485
Modbus RTU RS-485, ASCII or RTU, remote terminal unit 32 nodes
N2 = Johnson Controls Metasys N2 network

Onboard Ethernet-Based Communications (port left side of keypad)

BACnet/IP Ethernet industrial protocol
Modbus/TCP Transmission control protocol (Ethernet-based)

Notes

IntelliPass—two contactor electronic bypass standard.
All boards are varnished. Corrosion resistant.
Battery included in all drives for real-time clock. Three year lifetime.
Keypad kit includes HOA bypass.
EMI/RFI filters included.
DC link choke included.

Product Selection

H-Max Series IntelliPass NEMA Type 1—Two Contactor Bypass Standard

HMX_

208 Vac

FS Frame Size	Horsepower	Drive Rated NEC Amps	Catalog Number
4	1	4.5	**HMX4D531NA**
	2	7.5	**HMX7D531NA**
	3	10.6	**HMX01131NA**
5	5	16.7	**HMX01731NA**
	7.5	24.2	**HMX02531NA**
	10	30.8	**HMX03131NA**
6	15	46.2	**HMX04731NA**
	20	59.4	**HMX06031NA**
7	25	74.9	**HMX07531NA**
	30	88	**HMX08831NA**

230 Vac

FS Frame Size	Horsepower	Drive Rated NEC Amps	Catalog Number
4	1	4.2	**HMX4D232NA**
	2	7.5	**HMX7D532NA**
	3	9.6	**HMX9D632NA**
5	5	15.2	**HMX01632NA**
	7.5	22	**HMX02232NA**
	10	28	**HMX02832NA**
6	15	42	**HMX04232NA**
	20	54	**HMX05432NA**
7	25	68	**HMX06832NA**
	30	80	**HMX08032NA**

480 Vac

FS Frame Size	Horsepower	Drive Rated NEC Amps	Catalog Number
4	1	2.1	**HMX2D134NA**
	2	3.4	**HMX3D434NA**
	3	5.6	**HMX5D634NA**
	5	9.6	**HMX9D634NA**
	7.5	11	**HMX01134NA**
5	10	14	**HMX01434NA**
	15	21	**HMX02134NA**
	20	27	**HMX02734NA**
6	25	34	**HMX03434NA**
	30	40	**HMX04034NA**
	40	52	**HMX05234NA**
7	50	65	**HMX06534NA**
	60	77	**HMX07734NA**
	75	96	**HMX09634NA**

Notes

For Wiring Diagrams, see **Page V6-T2-157**.
For NEMA 12 or 3R enclosures, see Catalog Number Selection on Page **V6-T2-150**.
Call Technical Support for NEMA 3R specifics. Enclosure size and weight differ from NEMA 1 and 12 products.

H-Max Series IntelliDisconnect NEMA Type 1—Main Disconnect Standard

HMX_

208 Vac

FS Frame Size	Horsepower	Drive Rated NEC Amps	Catalog Number
4	1	4.5	**HMX4D5A1NA**
	2	7.5	**HMX7D5A1NA**
	3	11	**HMX011A1NA**
5	5	17	**HMX017A1NA**
	7.5	25	**HMX025A1NA**
	10	31	**HMX031A1NA**
6	15	47	**HMX047A1NA**
	20	60	**HMX060A1NA**
7	25	75	**HMX075A1NA**
	30	88	**HMX088A1NA**

230 Vac

FS Frame Size	Horsepower	Drive Rated NEC Amps	Catalog Number
4	1	4.2	**HMX4D2A2NA**
	2	7.5	**HMX7D5A2NA**
	3	9.6	**HMX9D6A2NA**
5	5	15.2	**HMX016A2NA**
	7.5	22	**HMX022A2NA**
	10	28	**HMX028A2NA**
6	15	42	**HMX042A2NA**
	20	54	**HMX054A2NA**
7	25	68	**HMX068A2NA**
	30	80	**HMX080A2NA**

480 Vac

FS Frame Size	Horsepower	Drive Rated NEC Amps	Catalog Number
4	1	2.1	**HMX2D1A4NA**
	2	3.4	**HMX3D4A4NA**
	3	5.6	**HMX5D6A4NA**
	5	9.6	**HMX9D6A4NA**
	7.5	11	**HMX011A4NA**
5	10	14	**HMX014A4NA**
	15	21	**HMX021A4NA**
	20	27	**HMX027A4NA**
6	25	34	**HMX034A4NA**
	30	40	**HMX040A4NA**
	40	52	**HMX052A4NA**
7	50	65	**HMX065A4NA**
	60	77	**HMX077A4NA**
	75	96	**HMX096A4NA**

Notes

For Wiring Diagrams, see **Page V6-T2-157**.
For NEMA 12 or 3R enclosures, see Catalog Number Selection on **Page V6-T2-150**.
Call Technical Support for NEMA 3R specifics. Enclosure size and weight differ from NEMA 1 and 12 products.

Onboard Network Communications

Johnson Controls Metasys N2

H-Max Series provides communication between the drive and a Johnson Controls Metasys™ N2 network. With this connection, the drive can be controlled, monitored and programmed from the Metasys system. N2 can be selected and programmed by the drive keypad.

BACnet

H-Max Series provides communication to BACnet networks. Data transfer is master-slave/token passing (MS/TP) RS-485.

BACnet IP

100 base T interface.

Modbus TCP

Ethernet based protocol.

Modbus RTU

H-Max Series provides communication to Modbus RTU RS-485 as a slave on a Modbus network. Other communication parameters include an address range from 1–247; a parity of None, Odd or Even; and the stop bit is 1.

H-Max Series Option Board Kits Available for Slots D and E

The H-Max Series drives can accommodate a wide selection of expander and adapter option boards to customize the drive for your application needs. The drive's control unit is designed to accept a total of two option boards.

The H-Max Series factory-installed standard board configuration includes an I/O board and a relay output board.

Option Boards Mounted in Slots D and E

Option Kit Description	Option Kit Catalog Number
6 x DI /DO, each digital input can be individually programmed as digital output	**XMX-IO-B1-A**
1RO Form C (NO/NC), 1RO Form A (NO), 1 thermistor	**XMX-IO-B2-A**
1 x AI, 2 x AO (isolated)	**XMX-IO-B4-A**
3 x RO Form A (NO)	**XMX-IO-B5-A**
1RO Form A (NO), 5DI 42–240 Vac input	**XMX-IO-B9-A**
LonWorks®	**XMX-COM-C4-A**
1 x AO, 1 x DO, 1 x RO	**XMX-IO-BF-A**

Extended I/O Options in Slot D and E

Description	Suffix Number
6 x DI /DO, Each digital input can be individually programmed as digital output	**B1**
1RO (NC/NO), 1RO (NO), 1 Thermistor	**B2**
1 x AI, 2 x AO (isolated)	**B4**
3 x RO	**B5**
1RO (NO), 5 DI 42–240 Vac input	**B9**
Expander IO, 1 AO, 1 DO, 1 RO	**BF**

Optional Communications in Slot D and E

Description	Suffix Number
LonWorks®	**C4**

EMC Upgrade Option

Description	Suffix Number
Standard	**EMC C2**

Keypad Options

Description	Suffix Number
None available	—

IntelliDisconnect Options

Description	Suffix Number
Pilot lights (Power ON, RUN, Fault)	**L3**
Fused drive isolation (cannot be used with PE)	**P3**
Output contactor (cannot be used with P3)	**PE**
Space heater w/transformer (Type 3R only)	**SA**

IntelliPass Bypass Options

Description	Suffix Number
Pilot lights (Power ON, RUN, Fault)	**L4**
Fused drive isolation (can not be used with P6)	**P3**
Third contactor drive isolation (cannot be used with P3 or IS)	**P6**
Manual bypass switch located on front door	**M1**
Space heater w/transformer (Type 3R only)	**SA**
Auxiliary contacts	**K9**
Isolation switch	**IS**

Standard Onboard Communications

Description	Suffix Number
RS-485 Communications	
BACnet MS/TP = Master slave/token protocol (Universal BACnet) RS-485	**BACnet**
Modbus RTU RS-485, ASCII or RTU, remote terminal unit 32 nodes	**Modbus**
Johnson Controls Metasys N2 network	**N2**
Onboard Ethernet-Based Communications (port left side of keypad)	
BACnet/IP Ethernet industrial protocol	**BACnet**
Modbus/TCP Transmission control protocol (Ethernet-based)	**Modbus**

Technical Data and Specifications

Primary Design Features

Description	IntelliPass	IntelliDisconnect
CB MMP	Standard	Standard
2 contactor bypass	Standard	N/A
Mechanical interlock	Standard	N/A
Electrical interlock	Standard	N/A
Third contactor (isolation)	Optional	N/A

Description	IntelliPass	IntelliDisconnect
Isolation switch	Optional	N/A
Top entry (power)	Standard	Standard
Bottom entry (power)	Standard	Standard
Output contactor	Standard	Optional

H-Max Series Drives

Description	Specification
Input Ratings	
Input voltage (V_{in})	208, 230, 480 Vac, –10%/+10%
Input frequency (f_{in})	50/60 Hz (variation up to 47–66 Hz)
Connection to power	Once per minute or less (typical operation)
Short circuit withstand rating	65 kAIC combination
Output Ratings	
Output voltage	0 to V_{in}/U_{in} line voltage in
Continuous output current	Ambient temperature max. 104°F (40°C)
I_L overload	1.1 x I_L (1 min./10 min.)
Overload current	110% (1 min./10 min.)
Initial output current	150% for two seconds
Output frequency	0 to 320 Hz
Frequency resolution	0.01 Hz
Control Characteristics	
Control method	Frequency control (V/f) open loop sensorless vector control
Switching frequency	1–310 amps; adjustable with parameter 2.6.9 FS4–FS7: default 6 kHz
Frequency reference	Analog input: Resolution 0.1% (10-bit), accuracy ±1% Panel reference: Resolution 0.01 Hz
Field weakening point	8 to 320 Hz
Acceleration time	0.1 to 3000 seconds
Deceleration time	0.1 to 3000 seconds
Braking torque	DC brake: 30% x T_n
Ambient Conditions	
Ambient operating temperature	FS4–FS7: 14°F (–10°C), no frost to 104°F (40°C) (Drive can operate at 122°F (50°C)
Storage temperature	–40° to 158°F (–40° to 70°C)
Relative humidity	0 to 95% RH, noncondensing, non-corrosive, no dripping water
Air quality	Chemical vapors: IEC 60721-3-3, unit in operation, Class 3C2; Mechanical particles: IEC 60721-3-3, unit in operation, Class 3S2
Altitude	100% load capacity (no derating) up to 3280 ft (1000m); 1% derating for each 328 ft (100m) above 3280 ft (1000m); max. 9842 ft (3000m); 380–480V
Vibration	FS4–FS7: IEC 60068-2-6, 10–150 Hz Displacement amplitude = 1 mm peak-to-peak from 10–15.8 Hz Max. acceleration amplitude = 1G peak from 15.8–150 Hz
Shock	FS4–FS7: IEC 60068-2-27, 15G peak acceleration at 11 ms duration, 1/2-sine. ISTA 1A Certified
Enclosure class	NEMA Type 1/IP21 or NEMA Type 12/IP54 (keypad required for IP54/Type 12)

Description	Specification
Standards	
EMC	Immunity: Fulfills all EMC immunity requirements; Emissions: EN 61800-3, LEVEL H (EMC C2)
Emissions	EMC level dependent— +EMC 2: EN61800-3 (2004) Category C2 Delivered with Class C2 EMC filtering as default.
Control Connections	
Analog input voltage	0 to 10V, R = 200 kohms differential Resolution 0.1%; Accuracy ±1% Dip switch selection (voltage/current)
Analog input current	0(4) to 20 mA; R_i –250 ohms differential
Digital inputs (6)	Positive or negative logic; 18 to 30 Vdc
Auxiliary voltage	+24V ±10%, max. 250 mA
Output reference voltage	+10V +3%, max. load 10 mA
Analog output	0–10V, 0(4) to 20 mA; R_L max. 500 ohms; Resolution 10 bit; Accuracy ±2%; Dip switch selection (voltage/current)
Relay outputs	3 programmable, 2 Form C, 1 Form A relay outputs Switching capacity: 24 Vdc/8A, 250 Vac/8A, 125 Vdc/0.4A
Hard wire jumper	Between terminal 6 and 10 factory default
Dip switch setting default	RS485 = off A01 = current A12 = current A11 = voltage
Protections	
Overcurrent protection	Yes
Overvoltage protection	Yes
DC bus regulation anti-trip	Yes (accelerates or decelerates the load)
Undervoltage protection	Yes
Earth fault protection	Yes (in case of earth fault in motor or motor cable, only the frequency converter is protected)
Input phase supervision	Yes (trips if any of the input phases are missing)
Motor phase supervision	Yes (trips if any of the output phases are missing)
Overtemperature protection	Yes
Motor overload protection	Yes
Motor stall protection	Yes
Motor underload protection	Yes
Short circuit protection	Yes
Surge protection	Yes (varistor input)
Conformed coated (varnished) board	Yes (prevents corrosion)

Wiring Diagrams

Control Input/Output, PID Application

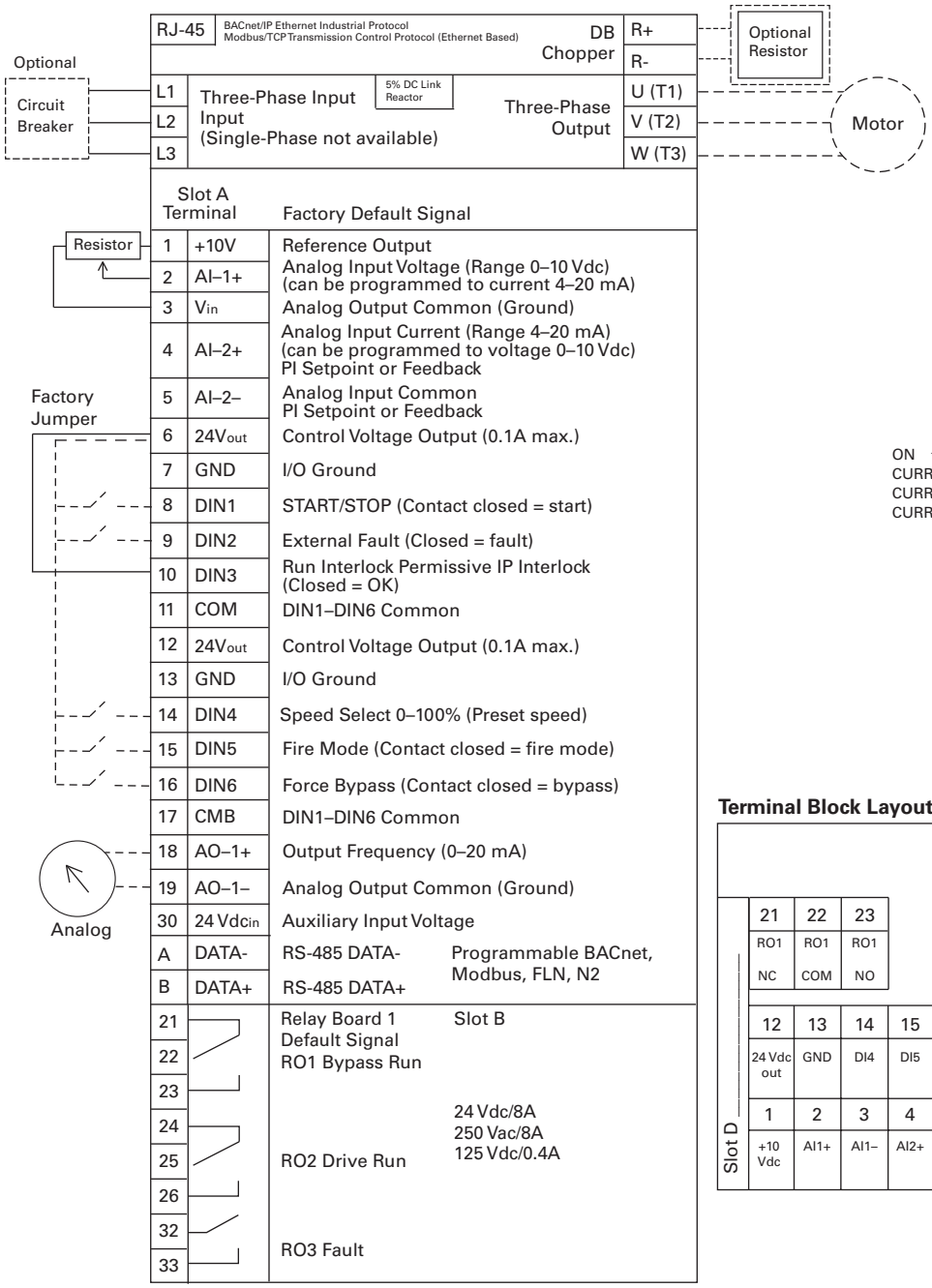

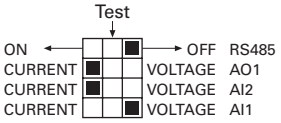

Terminal Block Layout

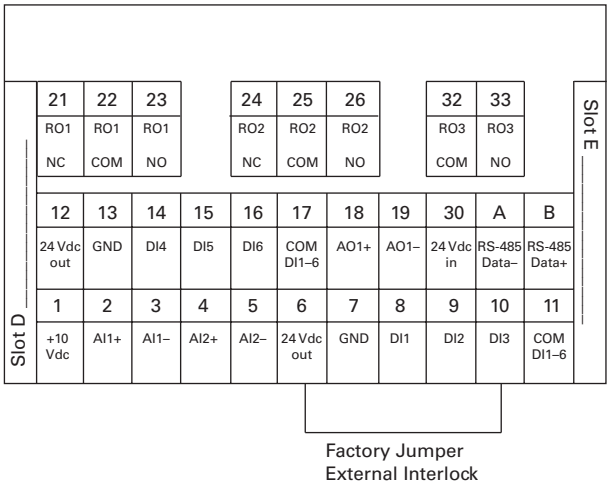

Standards

- Digital inputs D1–D6, relay out, analog in/out are freely programmed
- The user can assign a single input to multiple functions

Includes

- Six digital input
- Two analog input
- One analog output
- Three relay output
- RS-485
- Ethernet

Reliability

- Pretested components
- Conformal coated (varnished) boards
- 40°C rated
- 110% overload for one minute
- Eaton Electrical Services & Systems national network of AF drive specialists

H-Max Series IntelliPass

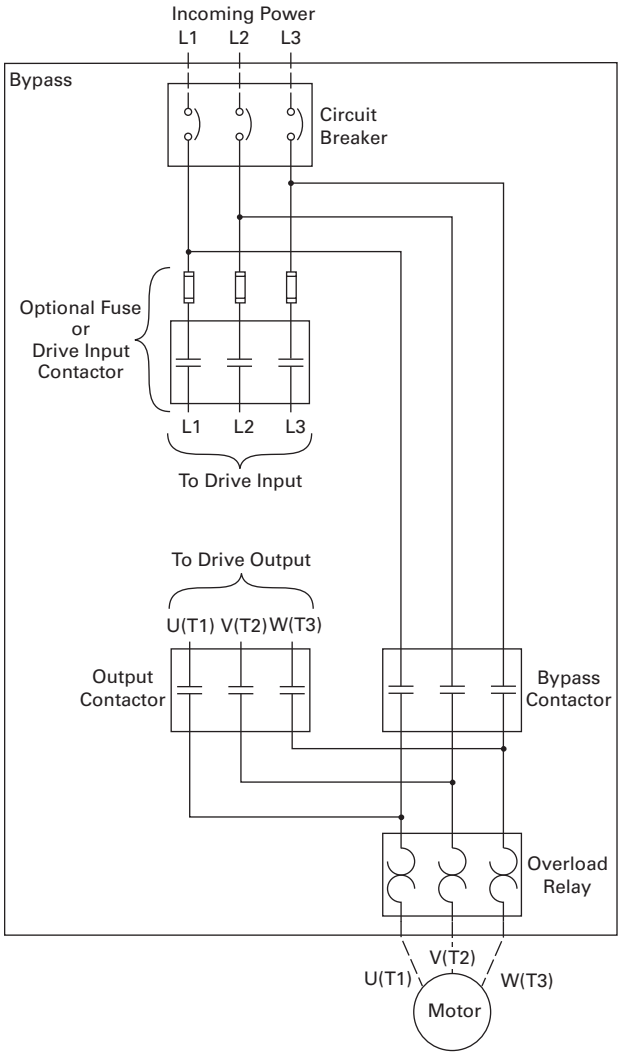

H-Max Series IntelliDisconnect Power Wiring

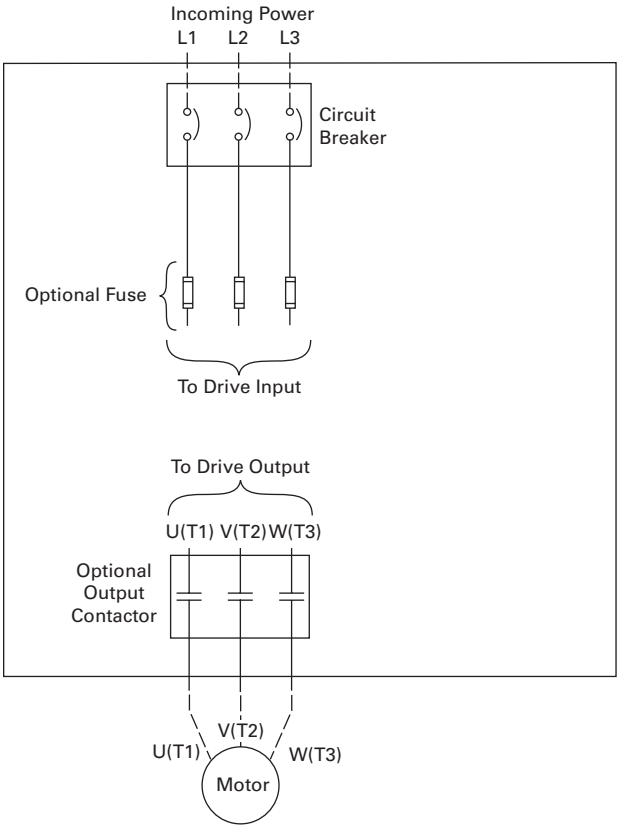

Dimensions

Approximate Dimensions in Inches (mm)

H-Max Series IntelliPass and IntelliDisconnect Drives

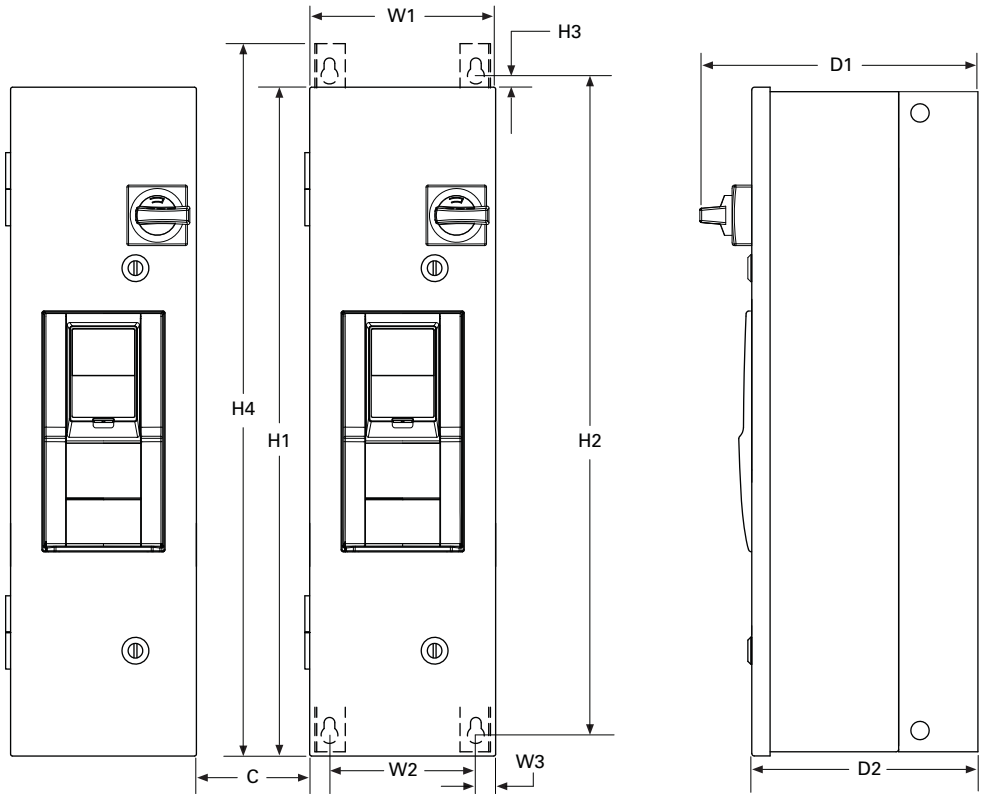

Consult factory or use manual for final dimensions.

Frame Size	Voltage	Horsepower (I_L)	H1	H2	H3	H4	C	W1	W2	W3	D1	D2	Weight in Lbs (kg)
FS4	208	1–3	29.69 (754.1)	37.12 (942.9)	0.25 (6.35)	31.00 (914.4)	3.00 (76.2)	7.88 (200.2)	6.33 (160.8)	0.75 (19.1)	11.40 (289.6)	9.27 (235.5)	45 (20.41)
	230	1–3											
	480	1–7.5											
FS5	208	5–10	37.00 (939.8)	34.47 (875.5)	0.25 (6.35)	38.31 (973.0)	3.00 (76.2)	9.40 (238.8)	7.75 (196.9)	0.75 (19.1)	15.30 (388.6)	13.17 (334.6)	57.5 (26.10)
	230	5–10											
	480	10–20											
FS6	208	15–20	45.08 (1145.0)	40.28 (1023.1)	0.25 (6.35)	46.4 (1178.6)	4.00 (101.6)	10.90 (276.9)	9.35 (327.5)	0.75 (19.1)	15.75 (400.0)	13.62 (346.0)	98.0 (44.45)
	230	15–20											
	480	25–40											
FS7	208	25–30	58.32 (1481.3)	56.30 (1430.0)	0.25 (6.35)	59.46 (1510.3)	5.00 (127.0)	13.98 (355.1)	12.35 (313.7)	0.75 (19.1)	15.50 (393.7)	13.55 (244.2)	165.0 (74.84)
	230	25–30											
	480	50–75											

Note: C distance is spacing required to mount multiple drives.

CFX9000 Enclosed Drives

Contents

Description	*Page*
CFX9000 Drives	
Application Description	**V6-T2-160**
Features and Benefits	**V6-T2-166**
Standards and Certifications	**V6-T2-166**
Product Identification	**V6-T2-166**
Catalog Number Selection	**V6-T2-167**
Product Selection	**V6-T2-168**
Options	**V6-T2-175**
Technical Data and Specifications	**V6-T2-180**
Wiring Diagram	**V6-T2-182**
Dimensions	**V6-T2-183**

Product Description

The CFX9000 Clean Power Drives from Eaton's electrical sector use tuned passive filters to significantly reduce line harmonics at the drive input terminals.

The CFX9000 drive also delivers True Power Factor—in addition to reducing harmonic distortion, the CFX9000 drive prevents transformer overheating and overloading of breakers and feeders, which enables the application of adjustable frequency drives on generators and other high impedance power systems.

The 9000X family of drives includes HVX9000, SVX9000, SLX9000, and SPX9000. 9000X Series drive ratings are rated for either high overload (I_H) or low overload (I_L). I_L indicates 110% overload capacity for 1 minute out of 10 minutes. I_H indicates 150% overload capacity for 1 minute out of 10 minutes.

CFX9000 Enclosed Products

- **Standard Enclosed**—covers a wide range of the most commonly ordered options. Pre-engineering eliminates the lead time normally associated with customer specific options. Available configurations are listed on **Pages V6-T2-166** to **V6-T2-181**.
- **Modified Standard Enclosed**—applies to specific customer requirements that vary from the Standard Enclosed offering, such as the need for an additional indicating light or minor modifications to drawings. *Contact your local sales office for assistance in pricing and lead time.*
- **Custom Engineered**—for those applications with more unique or complex requirements, these are individually engineered to the customer's needs. *Contact your local sales office for assistance in pricing and lead time.*

Application Description

Designed to meet the IEEE® 519-1992 requirements for harmonic distortion, the CFX9000 is an excellent choice for small and midsize drives applications where harmonics are a concern.

What Are Harmonics?

Take a perfect wave with a fundamental frequency of 60 Hz, which is close to what is supplied by the power company.

Perfect Wave

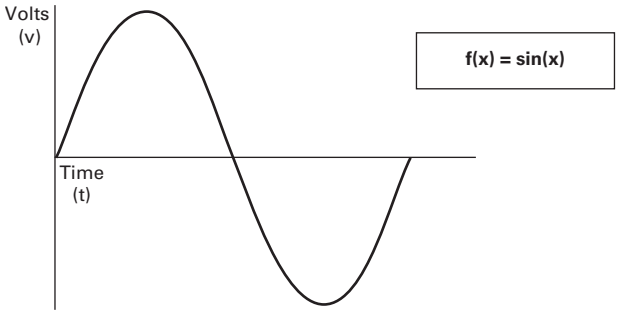

Add a second wave that is five times the fundamental frequency—300 Hz (typical of frequency added to the line by a fluorescent light).

Second Wave

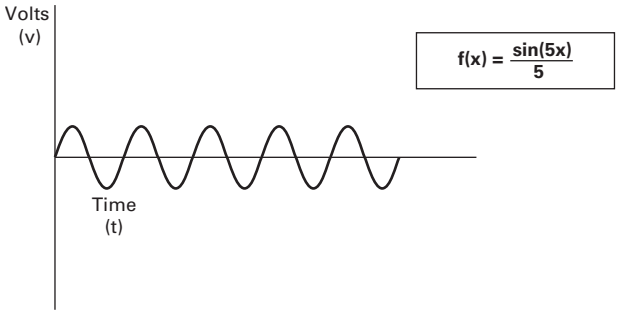

Combine the two waves. The result is a 60 Hz supply rich in fifth harmonics.

Resulting Supply

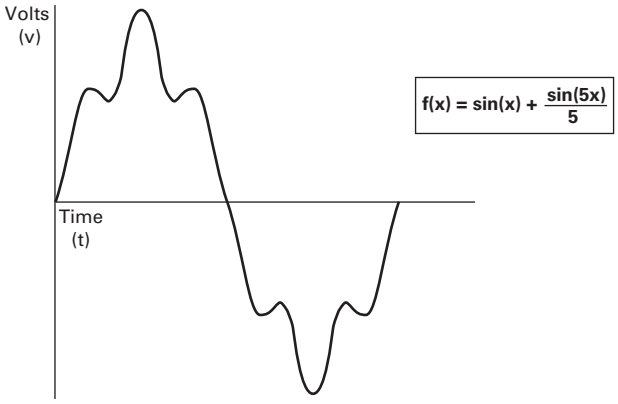

What Causes Harmonics?

Harmonics are the result of nonlinear loads that convert AC line voltage to DC. Examples of equipment that are non-linear loads are listed below:

- AC variable frequency drives
- DC drives
- Fluorescence lighting, computers, UPS systems
- Industrial washing machines, punch presses, welders, etc.

How Can Harmonics Due to VFDs Be Diminished?

By applying drives from the Eaton Clean Power Drives Family; The HCX9000, CFX9000 and CPX9000.

What Are Linear Loads?

Linear loads are primarily devices that run across the line and do not add harmonics. Motors are prime examples. The downside to having large motor linear loads is that they draw more energy than a VFD, because of their inability to control motor speed. In most applications there is a turn down valve used with the motor which will reduce the flow of the material, without significantly reducing the load to the motor. While this provides some measure of speed control, it is extremely inefficient.

Why Be Concerned About Harmonics?

1. ***Installation and utility costs increase.*** Harmonics cause damage to transformers and lower efficiencies due to the IR loss. These losses can become significant (from 16.6–21.6%) which can have a dramatic effect on the HVAC systems that are controlling the temperatures of the building where the transformer and drive equipment reside.
2. ***Downtime and loss of productivity.*** Telephones and data transmissions links may not be guaranteed to work on the same power grids polluted with harmonics.
3. ***Downtime and nuisance trips of drives and other equipment.*** Emergency generators have up to three times the impedance that is found in a conventional utility source. Thus the harmonic voltage can be up to three times as large, causing risk of operation problems.
4. ***Larger motors must be used.*** Motors running across the line that are connected on polluted power distribution grids can overheat or operate at lower efficiency due to harmonics.
5. ***Higher installation costs.*** Transformers and power equipment must be oversized to accommodate the loss of efficiencies. This is due to the harmonic currents circulating through the distribution without performing useful work.

How Does a VFD Convert Three-Phase AC to a Variable Output Voltage and Frequency?

The six-pulse VFD: The majority of all conventional drives that are built consist of a six-pulse configuration. The figure below represents a six-diode rectifier design that converts three-phase utility power to DC. The inverter section uses IGBTs to convert DC power to a simulated AC sine wave that can vary in frequency from 0–400 Hz.

The six-pulse VFD drive creates harmonic current distortion. The harmonic current that is created is energy that can not be used by customers and causes external heat and losses to all components including other drives that are on the same power distribution. The figure is a 100 hp drive with 45A of damaging harmonic current.

100 hp Six-Diode Rectifier Design

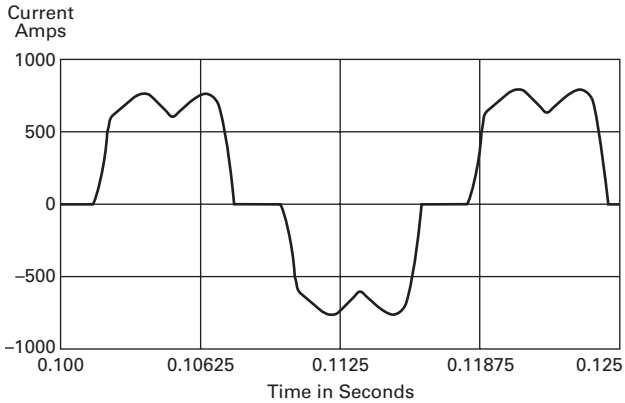

100 hp Six-Pulse Nonproductive Harmonic Current

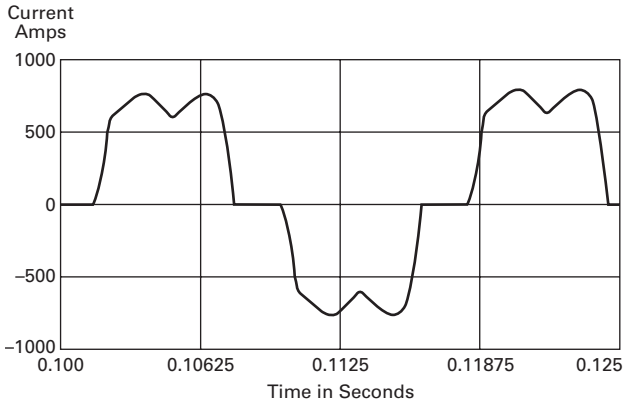

Six-Pulse Nonproductive Harmonic Current

Six-Pulse Circuit		
Current harmonics		
I_1 = 100%	I_{11} = 6.10%	I_{19} = 1.77%
I_5 = 22.5%	I_{13} = 4.06%	I_{23} = 1.12%
I_7 = 9.38%	I_{17} = 2.26%	I_{25} = 0.86%
Power = 100 hp		
Harmonic current = 45 amps		

Guidelines of Meeting IEEE Std. 519-1992 Harmonic Distortion Limits

The IEEE 519-1992 Specification is a standard that provides guidelines for commercial and industrial users that are implementing medium and low voltage equipment.

Maximum Harmonic Current Distortion in % of the Fundamental (120V through 69,000V)

	Harmonic Order (Odd Harmonics)					
Isc/I_L	h<11	11≤h<17	17≤h<23	23≤h<35	35≤h	TDD
<20	4.0	2.0	1.5	0.6	0.3	5.0
20<50	7.0	3.5	2.5	1.0	0.5	8.0
50<100	10.0	4.5	4.0	1.5	0.7	12.0
100<1000	12.0	5.5	5.0	2.0	1.0	15.0
>1000	15.0	7.0	6.0	2.5	1.4	20.0

The ratio Isc/I_L is the ratio of the short-circuit current available at the point of common coupling (PCC), to the maximum fundamental load current. Consequently, as the size of the user load decreases with respect to the size of the system, the percentage of harmonic current that the user is allowed to inject into the utility system increases.

Notes

TDD = Total demand distortion is the harmonic current distortion in percent of the maximum demand load current (15 or 30 minute demand).

I_{SC} = Maximum short circuit current at the PCC not counting motor contribution.

I_L = Maximum demand load current for all of the connected loads (fundamental frequency component) at the PCC. All of the limits are measured at a point of common coupling.

One-Line Diagram for Harmonic Analysis

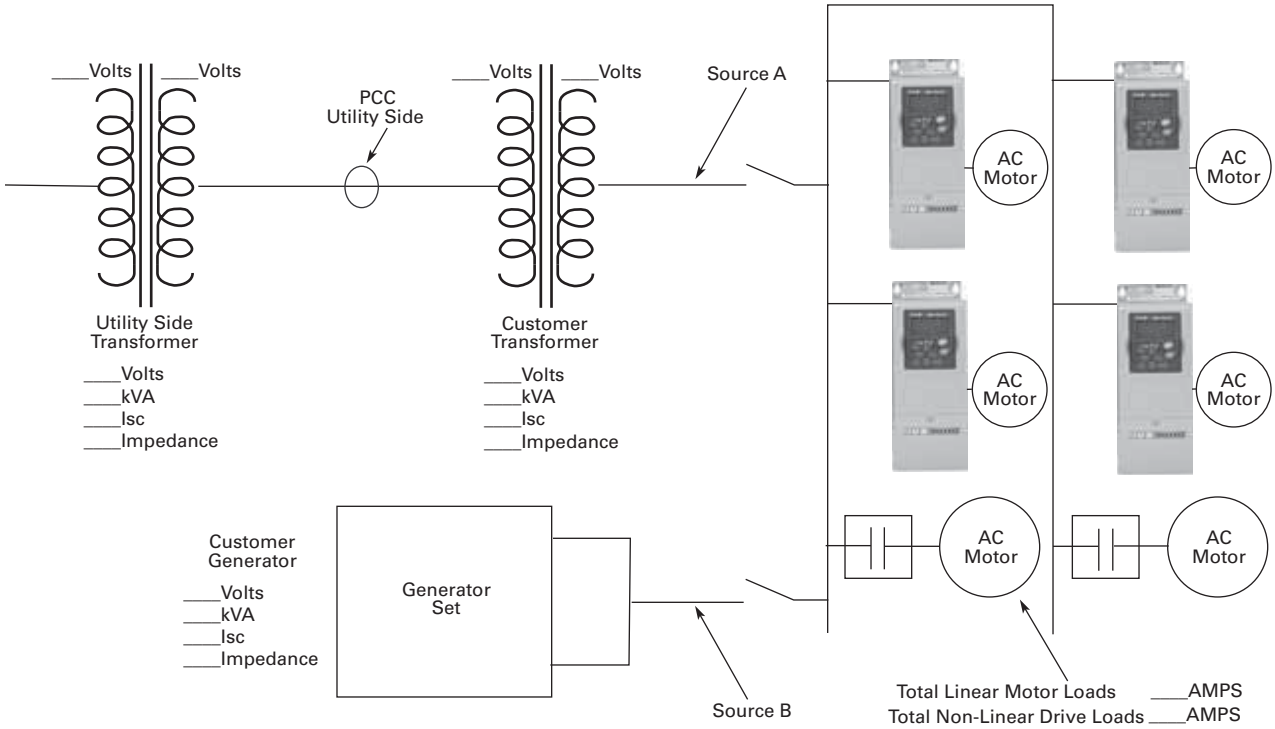

The best way to estimate AFD harmonic contribution to an electrical system is to perform a harmonic analysis based on known system characteristics. The one line in this figure would provide the data to complete the calculations.

Terms

- PCC (Point of Common Coupling) is defined as the electrical connecting point between the utility and multiple customers per the specifications in IEEE 519
- POA (Point of Analysis) is defined as where the harmonic calculations are taken

An oscilloscope can make all measurements at the PCC or POA to do an on-site harmonic evaluation.

Harmonic Reduction Methods to Meet IEEE 519

1. Line Reactor

A line reactor is a three-phase series inductance on the line side of an AFD. If a line reactor is applied on all AFDs, it is possible to meet IEEE guidelines where 10–25% of system loads are AFDs, depending on the stiffness of the line and the value of line reactance. Line reactors are available in various values of percent impedance, most typically 1–1.5%, 3% and 5%.

Note: The 9000X drives come standard with a nominal 3% input impedance.

Line Reactor

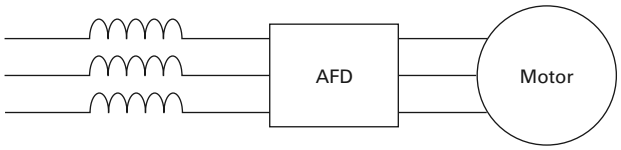

Advantages

- Low cost
- Can provide moderate reduction in voltage and current harmonics
- Available in various values of percent impedance
- Provides increased input protection for AFD and its semiconductors from line transients

Disadvantages

- May not reduce harmonic levels to below IEEE 519-1992 guidelines
- Voltage drop due to IR loss

2. Passive Filters

Tuned harmonic filters involve the series connection of an inductor with the shunt connection of an inductor and capacitor to form a low impedance path to ground for a specific range of frequencies. This path presents an alternative to the flow of harmonic currents back into the utility source.

CFX9000 Drive with Integrated Passive Filter

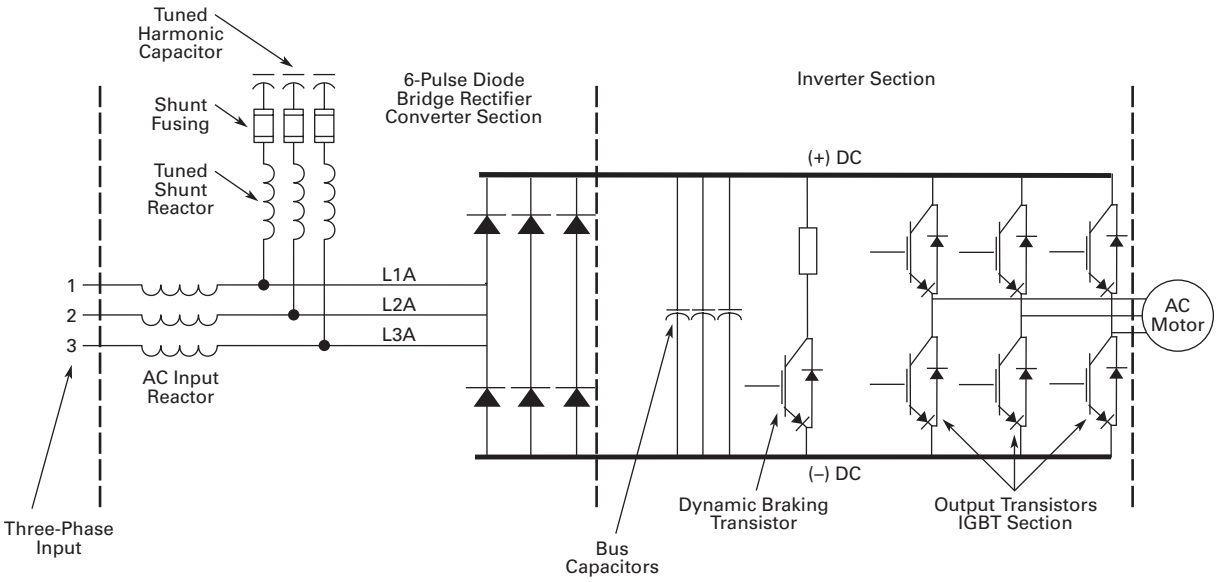

100 hp CFX9000 480V Drive with Integrated Passive Filter

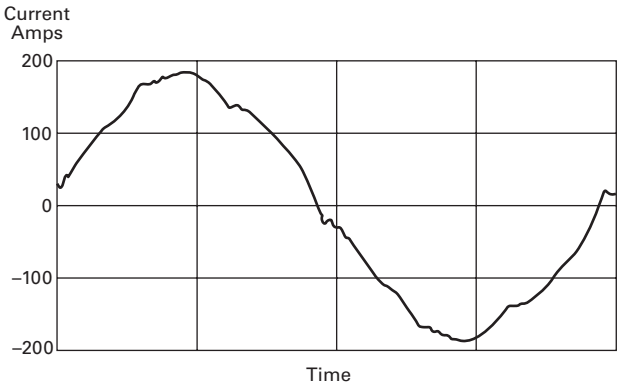

100 hp CFX9000 480V Drive with Integrated Passive Filter

Passive Filter		
Current harmonics		
I_1 = 100%	I_{11} = 0.24%	I_{19} = 0.50%
I_5 = 3.76%	I_{13} = 1.1%	I_{23} = 0.55%
I_7 = 1.65%	I_{17} = 0.80%	I_{25} = 0.80%
Power = 100 hp		
H_c = 8.6 Amps		

Advantages

- Low cost for smaller horsepower applications
- More effective harmonic attenuation than 12-pulse drives
- Provides increased input protection for AFD from line transients

Disadvantages

- Capacitors age over time, unlike magnetics
- Not as effective as 18-pulse drives
- Challenging to retrofit with bypass applications

3. 12-Pulse Converters

A 12-pulse converter incorporates two separate AFD input semiconductor bridges, which are fed from 30° phase shifted power sources with identical impedance. The sources may be two isolation transformers, where one is a delta/wye design (which provides the phase shift) and the second a delta/delta design (which does not phase shift). The 12-pulse arrangement allows the harmonics from the first converter to cancel the harmonics of the second. Up to approximately 85% reduction of harmonic current and voltage distortion may be achieved (over standard six-pulse converter). This permits a facility to use a larger percentage of AFD loads under IEEE 519-1992 guidelines than allowable using line reactors or DC chokes. A harmonic analysis is required to guarantee compliance with guidelines.

Basic 12-Pulse Rectifier with "Phase Shifting" Transformer

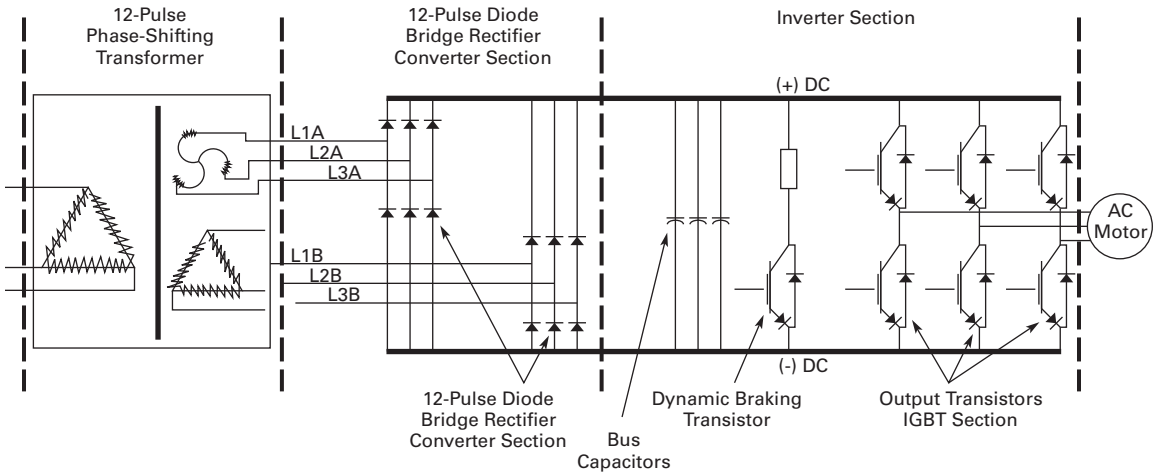

100 hp 480V Drive with 12-Pulse Rectifier

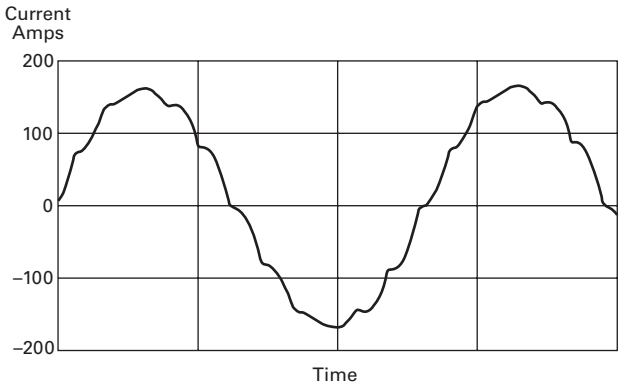

100 hp 480V Drive with 12-Pulse Rectifier

12-Pulse Circuit		
Current harmonics		
I_1 = 100%	I_{11} = 4.19%	I_{19} = 0.06%
I_5 = 1.25%	I_{13} = 2.95%	I_{23} = 0.87%
I_7 = 0.48%	I_{17} = 0.21%	I_{25} = 0.73%
Power = 100 hp		
H_c = 20 Amps		

Advantages

- Reasonable cost, although significantly more than reactors or chokes
- Substantial reduction (up to approx. 85%) in voltage and current harmonics
- Provides increased input protection for AFD and its semiconductors from line transients

Disadvantages

- Impedance matching of phase shifted sources is critical to performance
- Transformers often require separate mounting or larger AFD enclosures
- May not reduce distribution harmonic levels to below IEEE 519-1992 guidelines
- Cannot retrofit for most AFDs

4. Clean Power Drives

When the total load is comprised of non-linear load such as drives, and the ratio is I_{SC}/I_L, the greatest harmonic mitigation is required. Under these conditions, the currents drawn from the supply need to be sinusoidal and "clean" such that system interference and additional losses are negligible. Eaton's CPX9000 clean power drive uses a phase-shifting auto-transformer with delta-connected winding that carries only the ampere-turns caused by the difference in load currents. This results in nine separate phases. In this type of configuration, the total kVA rating of the transformer magnetic system was only 48% that of the motor load. A traditional isolated transformer system, with multipulse windings, would require the full kVA rating to be supported, which is more common in an MV step-down transformer.

The integrated 18-pulse clean power drive, with near sine wave input current and low harmonics will meet the requirements of IEEE 519-1992 under all practical operating conditions. The comparisons with six-pulse passive filter and 12-pulse systems are shown on **Pages V6-T2-161**, **V6-T2-163** and below.

Basic 18-Pulse Rectifier with Phase-Shifting Auto-Transformer

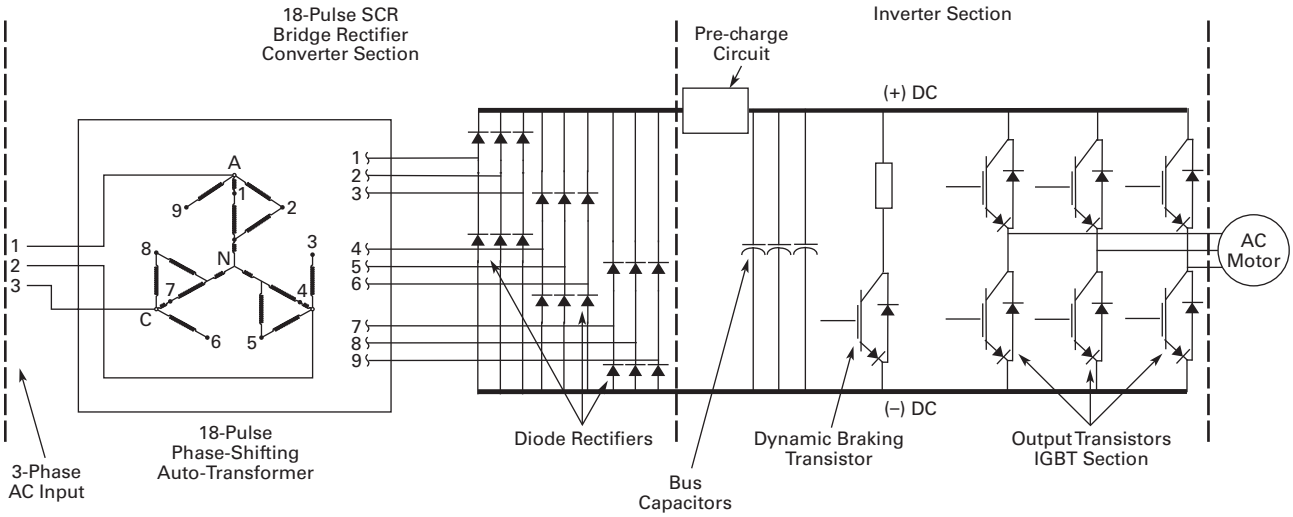

100 hp 480V Drive with 18-Pulse Rectifiers

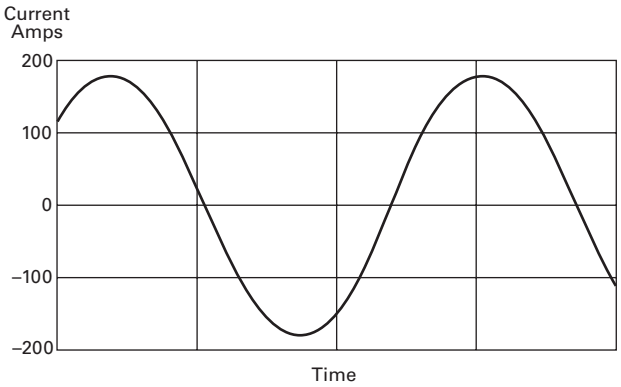

100 hp 480V Drive with 18-Pulse Rectifiers

18-Pulse Clean Power

Current harmonics		
I_1 = 100%	I_{11} = 0.24%	I_{19} = 1.00%
I_5 = 0.16%	I_{13} = 0.10%	I_{23} = 0.01%
I_7 = 0.03%	I_{17} = 0.86%	I_{25} = 0.01%
Power = 100 hp		
H_c = 5.9 Amps		

Advantages

- Effectively guarantees compliance with IEEE 519-1992
- Provides increased input protection for AFD and its semiconductors from line transients
- Up to 4 times the harmonic reduction of 12-pulse methods
- Smaller transformer than isolation transformer used in 12-pulse converter
- Minimizes ripple current in capacitors, doubling expected capacitor life

Disadvantages

- Not as cost effective as some other methods at small (<50) horsepower

Features and Benefits

New CFX9000 Integrated Filter Clean Power Drive features include (at 480V):

- UL Type 1, UL Type 12, UL Type 3R and NEMA 12 with gaskets and filters
- Input voltage: 480V, 230V, 575V
- Complete range of control, network and power options
- Horsepower range:
  - 480V, 7-1/2–400 hp I_L
  - 230V, 7-1/2–100 hp I_L; consult factory for details
  - 575V, 15–400 hp I_L; consult factory for details
- Single enclosure for both drive and filter reduces field wiring and enables convenient bypass installation
- Packaged solution ensures optimal coordination of drive and filter

Standards and Certifications

- UL
- cUL
- 508C

Product Identification

CFX9000 Drive—UL Type 12, 40 hp

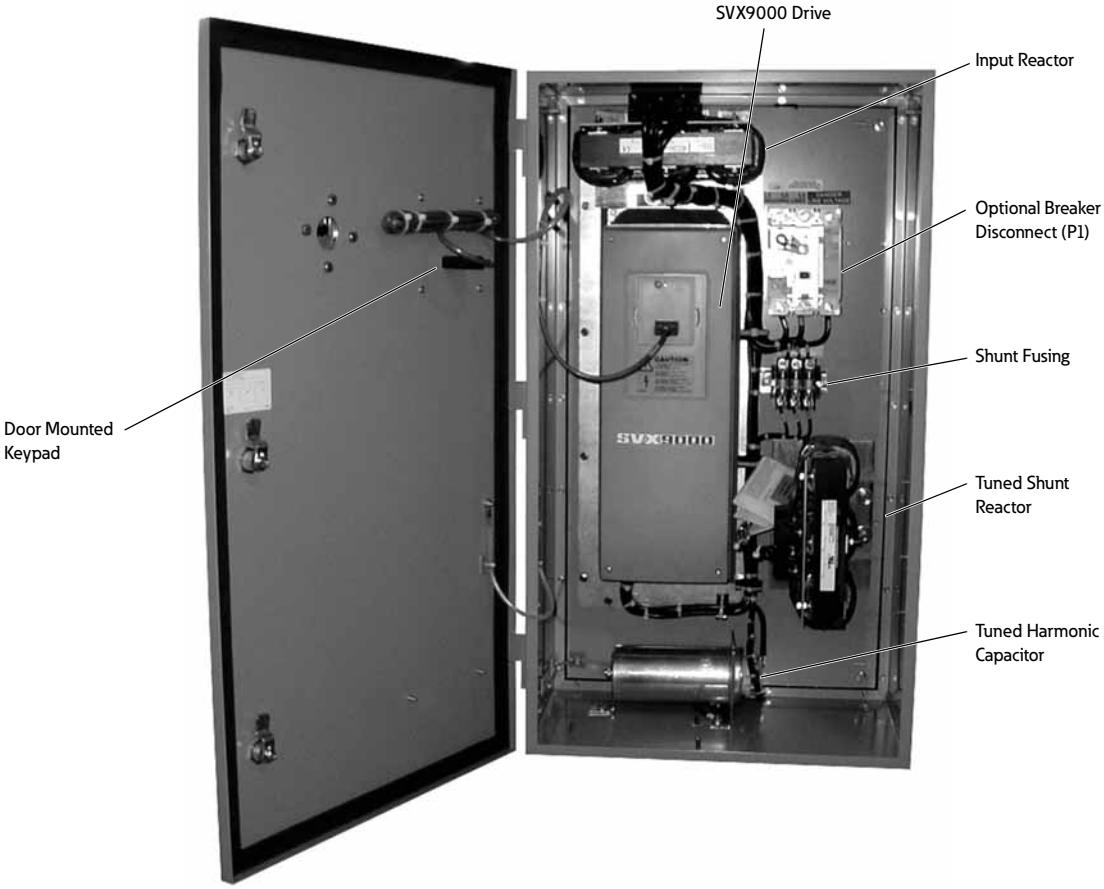

Catalog Number Selection

CFX9000 Enclosed Drives

CFX 050 1 4 A A

Build Alphabetically and Numerically

Product Family
CFX = Integrated filter clean power drive

Horsepower Rating		
007 = 7-1/2 hp	**040** = 40 hp	**150** = 150 hp
010 = 10 hp	**050** = 50 hp	**200** = 200 hp
015 = 15 hp	**060** = 60 hp	**250** = 250 hp
020 = 20 hp	**075** = 75 hp	**300** = 300 hp
025 = 25 hp	**100** = 100 hp	**350** = 350 hp
030 = 30 hp	**125** = 125 hp	**400** = 400 hp

Enclosure Rating
1 = UL Type 1
2 = UL Type 12
3 = UL Type 3R
6 = NEMA 12 filtered

Voltage Rating
1 = 208V
2 = 230V
4 = 480V
5 = 575V (575–600V)

Application—Torque/Braking ①
A = I_L/no brake chopper
B = I_L/internal brake chopper
D = I_H/no brake chopper
E = I_H/internal brake chopper

Enclosed Style
A = Enclosed drive

Enclosed Options ②③④		Type
K1	Door-mounted speed potentiometer ⑤	Control
K2	Door-mounted speed potentiometer with HOA selector switch ⑤	Control
K3	3–15 psig follower	Control
K4	HAND/OFF/AUTO switch (22 mm)	Control
K5	MANUAL/AUTO reference switch (22 mm)	Control
K6	START/STOP pushbuttons (22 mm)	Control
KF	Bypass test switch for RA and RB	Addl. bypass
KO	Standard elapsed time meter	Control
L1	Power, RUN and fault pilot lights	Light
L2	Bypass pilot lights for RA, RB, bypass options	Addl. bypass
LE	Red RUN light	Light
P1	Input circuit breaker	Input
P3	Input line fuses (200 kAIC)	Input
P7	Input power surge protection	Input
P8	TVSS surge protective device	Input
PE	Output contactor	Output
PF	Output filter	Output
PG	MotoRx (up to 600 ft) 1000 V/µS DV/DT filter	Output
PH	Single overload relay	Output
PI	Dual overload relays	Output
PN	Dual overloads for bypass	Addl. bypass
RA	Manual HOA bypass controller	Bypass
RB	Manual IOB bypass controller	Bypass
RC	Auto transfer HOA bypass controller	Bypass
RD	Auto transfer IOB bypass controller	Bypass
RG	Reduced voltage starter for bypass	Bypass
S4	Floor stand 6 in	Enclosure
S5	Floor stand 22 in	Enclosure
S6	Floor stand 12 in	Enclosure
S9	Space heater	Enclosure

Communication Options ⑥			
C2	= Modbus	**C8**	= Modbus (D9 type connector)
C3	= Profibus DP	**CA**	= Johnson Controls N2
C4	= LonWorks	**CI**	= Modbus TCP/Ethernet IP
C5	= Profibus DP (D9 Connector)	**CJ**	= BACnet
C6	= CanOpen (Slave)	**D3**	= RS-232 with D9 connection
C7	= DeviceNet		

Control Options
B1 = 6 DI, 1 ext +24 Vdc/EXT +24 Vdc
B2 = 1 RO (NC-NO), 1 RO (NO), 1 therm
B4 = 1 AI (mA isolated), 2 AO (mA isolated), 1 ext +24 Vdc/EXT +24 Vdc
B5 = 3 RO (NO)
B8 = 1 ext +24 Vdc/EXT +24 Vdc, 3 Pt100
B9 = 1 RO (NO), 5 DI 42–240 Vac input

Engineered Options	
HT	High temperature rating for 50°C ⑦
VB	Varnished boards

Notes

① Brake chopper is standard in 208V, 230V and 480V drives up to FR6; optional in all other drives.
② Local/remote keypad is included as the standard control panel.
③ Some options are voltage and/or horsepower specific. Consult your Eaton representative for details.
④ See **Pages V6-T2-177** and **V6-T2-178** for complete descriptions.
⑤ Includes local/remote speed reference switch.
⑥ See **Pages V6-T2-175** and **V6-T2-176** for complete descriptions.
⑦ Consult Eaton for availability.

Product Selection

When Ordering

- Select a base catalog number that meets the application requirements—nominal horsepower, voltage and enclosure rating. (The enclosed drive's continuous output amp rating should be equal to or greater than the motor's full load amp rating.) The base enclosed package includes a standard drive, door-mounted alphanumeric panel and enclosure.
- The CFX9000 product uses the term High Overload (I_H) in place of the term Constant Torque (CT). Likewise, Low Overload (I_L) is used in place of the term Variable Torque (VT). The new terms are a more precise description of the rating. The older terms included ambient temperature ratings in addition to overload ratings. In order to minimize enclosure size and offer the highest ambient temperature rating, overload and temperature ratings are now treated separately. Ambient temperature ratings are shown in the following table.

Ambient Temperature Ratings

Enclosure Size	I_H	I_L
B, C, 9 ①	40°C	40°C
7, 8	50°C	50°C

- If dynamic brake chopper or control/communication option is desired, change the appropriate code in the base catalog number.
- All of the programming is exactly the same as the standard SVX9000 drive.
- Select enclosed options. Add the codes as suffixes to the base catalog number in alphabetical and numeric order.

Note

① For high temperature rating, select HT option code and contact factory.

208V Drives

CFX9000 Drive

UL Type 1, UL Type 12, UL Type 3R and NEMA 12 Filtered

hp	NEC Current (A)	Chassis Frame	UL Type 1 Base Catalog Number	UL Type 12 and NEMA 12 Filtered Base Catalog Number	UL Type 3R Base Catalog Number
Low Overload Drive					
7-1/2	24.2	FR5	①	**CFX00721BA**	**CFX00731BA**
10	30.8	FR5	①	**CFX01021BA**	**CFX01031BA**
15	46.2	FR6	①	**CFX01521BA**	**CFX01531BA**
20	59.4	FR6	①	**CFX02021BA**	**CFX02031BA**
25	74.8	FR7	①	**CFX02521AA**	**CFX02531AA**
30	88	FR7	①	**CFX03021AA**	**CFX03031AA**
40	114	FR7	①	**CFX04021AA**	**CFX04031AA**
50	143	FR8	**CFX05011AA**	**CFX05061AA**	**CFX05031AA**
60	169	FR8	**CFX06011AA**	**CFX06061AA**	**CFX06031AA**
75	211	FR8	**CFX07511AA**	**CFX07561AA**	**CFX07531AA**
100	273	FR9	**CFX10011AA**	**CFX10061AA**	**CFX10031AA**
High Overload Drive					
7-1/2	24.2	FR5	①	**CFX00721EA**	**CFX00731EA**
10	30.8	FR6	①	**CFX01021EA**	**CFX01031EA**
15	46.2	FR6	①	**CFX01521EA**	**CFX01531EA**
20	59.4	FR7	①	**CFX02021DA**	**CFX02031DA**
25	74.8	FR7	①	**CFX02521DA**	**CFX02531DA**
30	88	FR7	①	**CFX03021DA**	**CFX03031DA**
40	114	FR8	**CFX04011DA**	**CFX04061DA**	**CFX04031DA**
50	143	FR8	**CFX05011DA**	**CFX05061DA**	**CFX05031DA**
60	169	FR8	**CFX06011DA**	**CFX06061DA**	**CFX06031DA**
75	211	FR9	**CFX07511DA**	**CFX07561DA**	**CFX07531DA**
100	273	FR9	**CFX10011DA**	**CFX10061DA**	**CFX10031DA**

CFX9000 Enclosure

Chassis Frame	UL Type 1 Disconnect Only	UL Type 1 With Power Options	UL Type 12 Disconnect Only	UL Type 12 With Power Options	UL Type 3R Disconnect Only	UL Type 3R With Power Options
FR4	N/A	N/A	B	C	B	C
FR5	N/A	N/A	B	C	B	C
FR6	N/A	N/A	B	C	B	C
FR7	N/A	7	C	7	C	D
FR8	7	7	7	7	F	F
FR9	8	8	8	8	F	F

Enclosure Dimension Drawings

Enclosure Size	UL Type 1 and UL Type 12	UL Type 3R
B	See **Page V6-T2-183**	See **Page V6-T2-185**
C	See **Page V6-T2-184**	See **Page V6-T2-186**
D	N/A	See **Page V6-T2-187**
F	N/A	See **Page V6-T2-188**
7 ②	See **Page V6-T2-189**	③
8 ②	See **Page V6-T2-190**	③
9	See **Page V6-T2-191**	③

Notes

① FR5–FR7 drives not available in UL Type 1.
② Enclosures 7 and 8 are NEMA 12 filtered.
③ Not available for UL Type 3R.

230V Drives

CFX9000 Drive

UL Type 1, UL Type 12, UL Type 3R and NEMA 12 Filtered

hp	NEC Current (A)	Chassis Frame	UL Type 1 Base Catalog Number	UL Type 12 and NEMA 12 Filtered Base Catalog Number	UL Type 3R Base Catalog Number
Low Overload Drive					
7-1/2	22	FR5	①	**CFX00722BA**	**CFX00732BA**
10	28	FR5	①	**CFX01022BA**	**CFX01032BA**
15	42	FR6	①	**CFX01522BA**	**CFX01532BA**
20	54	FR6	①	**CFX02022BA**	**CFX02032BA**
25	68	FR7	①	**CFX02522AA**	**CFX02532AA**
30	80	FR7	①	**CFX03022AA**	**CFX03032AA**
40	104	FR7	①	**CFX04022AA**	**CFX04032AA**
50	130	FR8	**CFX05012AA**	**CFX05062AA**	**CFX05032AA**
60	154	FR8	**CFX06012AA**	**CFX06062AA**	**CFX06032AA**
75	192	FR8	**CFX07512AA**	**CFX07562AA**	**CFX07532AA**
100	248	FR9	**CFX10012AA**	**CFX10062AA**	**CFX10032AA**
High Overload Drive					
7-1/2	22	FR5	①	**CFX00722EA**	**CFX00732EA**
10	28	FR6	①	**CFX01022EA**	**CFX01032EA**
15	42	FR6	①	**CFX01522EA**	**CFX01532EA**
20	54	FR7	①	**CFX02022DA**	**CFX02032DA**
25	68	FR7	①	**CFX02522DA**	**CFX02532DA**
30	80	FR7	①	**CFX03022DA**	**CFX03032DA**
40	104	FR8	**CFX04012DA**	**CFX04062DA**	**CFX04032DA**
50	130	FR8	**CFX05012DA**	**CFX05062DA**	**CFX05032DA**
60	154	FR8	**CFX06012DA**	**CFX06062DA**	**CFX06032DA**
75	192	FR9	**CFX07512DA**	**CFX07562DA**	**CFX07532DA**
100	248	FR9	**CFX10012DA**	**CFX10062DA**	**CFX10032DA**

CFX9000 Enclosure

Chassis Frame	UL Type 1 Disconnect Only	UL Type 1 With Power Options	UL Type 12 Disconnect Only	UL Type 12 With Power Options	UL Type 3R Disconnect Only	UL Type 3R With Power Options
FR4	N/A	N/A	B	C	B	C
FR5	N/A	N/A	B	C	B	C
FR6	N/A	N/A	B	C	B	C
FR7	N/A	7	C	7	C	D
FR8	7	7	7	7	F	F
FR9	8	8	8	8	F	F

Enclosure Dimension Drawings

Enclosure Size	UL Type 1 and UL Type 12	UL Type 3R
B	See **Page V6-T2-183**	See **Page V6-T2-185**
C	See **Page V6-T2-184**	See **Page V6-T2-186**
D	N/A	See **Page V6-T2-187**
F	N/A	See **Page V6-T2-188**
7 ②	See **Page V6-T2-189**	③
8 ②	See **Page V6-T2-190**	③
9	See **Page V6-T2-191**	③

Notes

① FR5–FR7 drives not available in UL Type 1.
② Enclosures 7 and 8 are NEMA 12 filtered.
③ Not available for UL Type 3R.

480V Drives

CFX9000 Drive

CFX9000 Base Drive

hp	NEC Current (A)	Chassis Frame	UL Type 1 Base Catalog Number ①	UL Type 12 and NEMA 12 Filtered Base Catalog Number ①	UL Type 3R Base Catalog Number ①
Low Overload Drive					
7-1/2	11	FR4	②	**CFX00724BA**	**CFX00734BA**
10	14	FR5	②	**CFX01024BA**	**CFX01034BA**
15	21	FR5	②	**CFX01524BA**	**CFX01534BA**
20	27	FR5	②	**CFX02024BA**	**CFX02034BA**
25	34	FR6	②	**CFX02524BA**	**CFX02534BA**
30	40	FR6	②	**CFX03024BA**	**CFX03034BA**
40	52	FR6	②	**CFX04024BA**	**CFX04034BA**
50	65	FR7	**CFX05014AA** ③	**CFX05024AA**	**CFX05034AA**
60	77	FR7	**CFX06014AA** ③	**CFX06024AA**	**CFX06034AA**
75	96	FR7	**CFX07514AA** ③	**CFX07524AA**	**CFX07534AA**
100	124	FR8	**CFX10014AA**	**CFX10064AA**	**CFX10034AA**
125	156	FR8	**CFX12514AA**	**CFX12564AA**	**CFX12534AA**
150	180	FR8	**CFX15014AA**	**CFX15064AA**	**CFX15034AA**
200	240	FR9	**CFX20014AA**	**CFX20064AA**	**CFX20034AA**
250	302	FR9	**CFX25014AA**	**CFX25064AA**	**CFX25034AA**
300	361	FR10	**CFX30014AA**	**CFX30064AA**	④
350	414	FR10	**CFX35014AA**	**CFX35064AA**	④
400	477	FR10	**CFX40014AA**	**CFX40064AA**	④
High Overload Drive					
7-1/2	11	FR5	②	**CFX00724EA**	**CFX00734EA**
10	14	FR5	②	**CFX01024EA**	**CFX01034EA**
15	21	FR5	②	**CFX01524EA**	**CFX01534EA**
20	27	FR6	②	**CFX02024EA**	**CFX02034EA**
25	34	FR6	②	**CFX02524EA**	**CFX02534EA**
30	40	FR6	②	**CFX03024EA**	**CFX03034EA**
40	52	FR7	**CFX04014DA** ③	**CFX04024DA**	**CFX04034DA**
50	65	FR7	**CFX05014DA** ③	**CFX05024DA**	**CFX05034DA**
60	77	FR7	**CFX06014DA** ③	**CFX06024DA**	**CFX06034DA**
75	96	FR8	**CFX07514DA**	**CFX07564DA**	**CFX07534DA**
100	124	FR8	**CFX10014DA**	**CFX10064DA**	**CFX10034DA**
125	156	FR8	**CFX12514DA**	**CFX12564DA**	**CFX12534DA**
150	180	FR9	**CFX15014DA**	**CFX15064DA**	**CFX15034DA**
200	240	FR9	**CFX20014DA**	**CFX20064DA**	**CFX20034DA**
250	302	FR10	**CFX25014DA**	**CFX25064DA**	④
300	361	FR10	**CFX30014DA**	**CFX30064DA**	④
350	414	FR10	**CFX35014DA**	**CFX35064DA**	④

Notes

① The integrated filter clean power assembly includes a standard drive, door-mounted local/remote keypad and enclosure.
② FR4–FR6 drives not available in UL Type 1.
③ This catalog number is used only with power options.
④ Consult factory.

CFX9000 Enclosure

Chassis Frame	UL Type 1 Disconnect Only	UL Type 1 With Power Options	UL Type 12 Disconnect Only	UL Type 12 With Power Options	UL Type 3R Disconnect Only	UL Type 3R With Power Options
FR4	N/A	N/A	B	C	B	C
FR5	N/A	N/A	B	C	B	C
FR6	N/A	N/A	B	C	B	C
FR7	N/A	7	C	7	C	D
FR8	7	7	7	7	F	F
FR9	8	8	8	8	F	F
FR10	9	9	9	9	①	①

Enclosure Dimension Drawings

Enclosure Size	UL Type 1 and UL Type 12	UL Type 3R
B	See **Page V6-T2-183**	See **Page V6-T2-185**
C	See **Page V6-T2-184**	See **Page V6-T2-186**
D	N/A	See **Page V6-T2-187**
F	N/A	See **Page V6-T2-188**
7 ②	See **Page V6-T2-189**	③
8 ②	See **Page V6-T2-190**	③
9	See **Page V6-T2-191**	③

Notes

① Consult factory.
② Enclosures 7 and 8 are NEMA 12 filtered.
③ Not available for UL Type 3R.

575V Drives

CFX9000 Drive

UL Type 1, UL Type 12, UL Type 3R and NEMA 12 Filtered

hp	NEC Current (A)	Chassis Frame	UL Type 1 Base Catalog Number	UL Type 12 and NEMA 12 Filtered Base Catalog Number	UL Type 3R Base Catalog Number
Low Overload Drive					
15	17	FR6	①	**CFX01525AA**	**CFX01535AA**
20	22	FR6	①	**CFX02025AA**	**CFX02035AA**
25	27	FR6	①	**CFX02525AA**	**CFX02535AA**
30	32	FR6	①	**CFX03025AA**	**CFX03035AA**
40	41	FR7	①	**CFX04025AA**	**CFX04035AA**
50	52	FR7	①	**CFX05025AA**	**CFX05035AA**
60	62	FR8	**CFX06015AA**	**CFX06065AA**	**CFX06035AA**
75	77	FR8	**CFX07515AA**	**CFX07565AA**	**CFX07535AA**
100	99	FR8	**CFX10015AA**	**CFX10065AA**	**CFX10035AA**
125	125	FR9	**CFX12515AA**	**CFX12565AA**	**CFX12535AA**
150	144	FR9	**CFX15015AA**	**CFX15065AA**	**CFX15035AA**
200	192	FR9	**CFX20015AA**	**CFX20065AA**	**CFX20035AA**
250	242	FR10	**CFX25015AA**	**CFX25065AA**	②
300	289	FR10	**CFX30015AA**	**CFX30065AA**	②
400	382	FR10	**CFX40015AA**	**CFX40065AA**	②
High Overload Drive					
10	14	FR6	①	**CFX01025DA**	**CFX01035DA**
15	17	FR6	①	**CFX01525DA**	**CFX01535DA**
20	22	FR6	①	**CFX02025DA**	**CFX02035DA**
25	27	FR6	①	**CFX02525DA**	**CFX02535DA**
30	32	FR7	①	**CFX03025DA**	**CFX03035DA**
40	41	FR7	①	**CFX04025DA**	**CFX04035DA**
50	52	FR8	**CFX05015DA**	**CFX05065DA**	**CFX05035DA**
60	62	FR8	**CFX06015DA**	**CFX06065DA**	**CFX06035DA**
75	77	FR8	**CFX07515DA**	**CFX07565DA**	**CFX07535DA**
100	99	FR9	**CFX10015DA**	**CFX10065DA**	**CFX10035DA**
125	125	FR9	**CFX12515DA**	**CFX12565DA**	**CFX12535DA**
150	144	FR9	**CFX15015DA**	**CFX15065DA**	**CFX15035DA**
200	192	FR10	**CFX20015DA**	**CFX20065DA**	②
250	242	FR10	**CFX25015DA**	**CFX25065DA**	②
300	289	FR10	**CFX30015DA**	**CFX30065DA**	②

Notes

① FR6–FR7 drives not available in UL Type 1.
② Consult factory.

CFX9000 Enclosure

Chassis Frame	UL Type 1 Disconnect Only	UL Type 1 With Power Options	UL Type 12 Disconnect Only	UL Type 12 With Power Options	UL Type 3R Disconnect Only	UL Type 3R With Power Options
FR6	N/A	N/A	B	C	B	C
FR7	N/A	7	C	7	C	D
FR8	7	7	7	7	F	F
FR9	8	8	8	8	F	F
FR10	9	9	9	9	①	①

Enclosure Dimension Drawings

Enclosure Size	UL Type 1 and UL Type 12	UL Type 3R
B	See **Page V6-T2-183**	See **Page V6-T2-185**
C	See **Page V6-T2-184**	See **Page V6-T2-186**
D	N/A	See **Page V6-T2-187**
F	N/A	See **Page V6-T2-188**
7 ②	See **Page V6-T2-189**	③
8 ②	See **Page V6-T2-190**	③
9	See **Page V6-T2-191**	③

Notes

① Consult factory.
② Enclosures 7 and 8 are NEMA 12 filtered.
③ Not available for UL Type 3R.

Options

CFX9000 Series Option Board Kits

The CFX9000 Series drives can accommodate a wide selection of expander and adapter option boards to customize the drive for your application needs. The drive's control unit is designed to accept a total of five option boards.

The CFX9000 Series factory-installed standard board configuration includes an A9 I/O board and an A2 relay output board, which are installed in slots A and B.

Option Boards

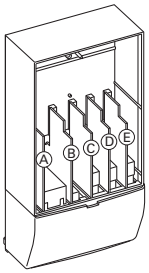

Option Board Kits

Option Kit Description ①	Allowed Slot Locations ②	Field Installed Catalog Number	Factory Installed Option Designator	SVX Ready Programs Basic	Local/ Remote	Standard	MSS	PID	Multi-P.	PFC
Standard I/O Cards										
2 RO (NC/NO)	B	**OPTA2**	—	■	■	■	■	■	■	■
6 DI, 1 DO, 2 AI, 1AO, 1 +10 Vdc ref, 2 ext +24 Vdc/ext +24 Vdc	A	**OPTA9**	—	■	■	■	■	■	■	■
Extended I/O Cards										
6 DI	B, C, **D**, E	**OPTB1**	**B1**	—	—	—	—	—	■	■
1 RO (NC/NO), 1 RO (NO), 1 therm	B, C, **D**, E	**OPTB2**	**B2**	—	—	—	—	—	■	■
1 AI (mA isolated), 2 AO (mA isolated)	B, C, **D**, E	**OPTB4**	**B4**	■	■	■	■	■	■	■
3 RO (NO)	B, C, **D**, E	**OPTB5**	**B5**	—	—	—	—	—	■	■
3 Pt100 RTD board	B, C, **D**, E	**OPTB8**	**B8**	—	—	—	—	—	■	—
1 RO (NO), 5 DI 42–240 Vac input	B, C, **D**, E	**OPTB9**	**B9**	—	—	—	—	—	■	■
Communication Cards ③										
Modbus	D, **E**	**OPTC2**	**C2**	■	■	■	■	■	■	■
Modbus TCP	D, **E**	**OPTCI**	**CI**	■	■	■	■	■	■	■
BACnet	D, **E**	**OPTCJ**	**CJ**	■	■	■	■	■	■	■
Ethernet IP	D, **E**	**OPTCK**	**CK**	■	■	■	■	■	■	■
Johnson Controls N2	D, **E**	**OPTC2**	**CA**	■	■	■	■	■	■	■
PROFIBUS DP	D, **E**	**OPTC3**	**C3**	■	■	■	■	■	■	■
LonWorks	D, **E**	**OPTC4**	**C4**	■	■	■	■	■	■	■
PROFIBUS DP (D9 connector)	D, **E**	**OPTC5**	**C5**	■	■	■	■	■	■	■
CANopen (slave)	D, **E**	**OPTC6**	**C6**	■	■	■	■	■	■	■
DeviceNet	D, **E**	**OPTC7**	**C7**	■	■	■	■	■	■	■
Modbus (D9 type connector)	D, **E**	**OPTC8**	**C8**	■	■	■	■	■	■	■
RS-232 with D9 connection	D, **E**	**OPTD3**	**D3**	■	■	■	■	■	■	■

Notes

① AI = Analog Input; AO = Analog Output, DI = Digital Input, DO = Digital Output, RO = Relay Output
② Option card must be installed in one of the slots listed for that card. Slot indicated in bold is the preferred location.
③ OPTC2 is a multi-protocol option card.

Modbus RTU Network Communications

The Modbus Network Card OPTC2 is used for connecting the 9000X Drive as a slave on a Modbus network. The interface is connected by a 9-pin DSUB connector (female) and the baud rate ranges from 300 to 19,200 baud. Other communication parameters include an address range from 1 to 247; a parity of None, Odd or Even; and the stop bit is 1.

PROFIBUS Network Communications

The PROFIBUS Network Card OPTC3 is used for connecting the 9000X Drive as a slave on a PROFIBUS-DP network. The interface is connected by a 9-pin DSUB connector (female). The baud rates range from 9.6K baud to 12M baud, and the addresses range from 1 to 127.

LonWorks Network Communications

The LonWorks Network Card OPTC4 is used for connecting the 9000X Drive on a LonWorks network. This interface uses Standard Network Variable Types (SNVT) as data types. The channel connection is achieved using a FTT-10A Free Topology transceiver via a single twisted transfer cable. The communication speed with LonWorks is 78 kBits/s.

CANopen (Slave) Communications

The CANopen (Slave) Network Card OPTC6 is used for connecting the 9000X Drive to a host system. According to ISO® 11898 standard cables to be chosen for CAN bus should have a nominal impedance of 120 ohms, and specific line delay of nominal 5 as/m. 120 ohm line termination resistors required for installation.

DeviceNet Network Communications

The DeviceNet Network Card OPTC7 is used for connecting the 9000X Drive on a DeviceNet Network. It includes a 5.08 mm pluggable connector. Transfer method is via CAN using a two-wire twisted shielded cable with two-wire bus power cable and drain. The baud rates used for communication include 125K baud, 250K baud and 500K baud.

Johnson Controls Metasys N2 Network Communications

The OPTC2 fieldbus board provides communication between the 9000X Drive and a Johnson Controls Metasys™ N2 network. With this connection, the drive can be controlled, monitored and programmed from the Metasys system. The N2 fieldbus is available as a factory-installed option and as a field-installable kit.

Modbus/TCP Network Communications

The Modbus/TCP Network Card OPTCI is used for connecting the 9000X Drive to Ethernet networks using Modbus protocol. It includes an RJ-45 pluggable connector. This interface provides a selection of standard and custom register values to communicate drive parameters. The board supports 10 Mbps and 100 Mbps communication speeds. The IP address of the board is configurable over Ethernet using a supplied software tool.

BACnet Network Communications

The BACnet Network Card OPTCJ is used for connecting the 9000X Drive to BACnet networks. It includes a 5.08 mm pluggable connector. Data transfer is Master-Slave/Token Passing (MS/TP) RS-485. This interface uses a collection of 30 Binary Value Objects (BVOs) and 35 Analog Value Objects (AVOs) to communicate drive parameters. The card supports 9.6, 19.2 and 38.4 Kbaud communication speeds and supports network addresses 1 to 127.

Ethernet/IP Network Communications

The Ethernet/IP Network Card OPTCK is used for connecting the 9000X Drive to Ethernet/Industrial Protocol networks. It includes an RJ-45 pluggable connector. The interface uses CIP objects to communicate drive parameters (CIP is "Common Industrial Protocol," the same protocol used by DeviceNet). The board supports 10 Mbps and 100 Mbps communication speeds. The IP address of the board is configurable by Static, BOOTP and DHCP methods.

Control/Communication Option Descriptions

Available Control/Communications Options

Option	Description	Option Type
K1	**Door-Mounted Speed Potentiometer**—Provides the drive with the ability to adjust the frequency reference using a door-mounted potentiometer. This option uses the 10 Vdc reference to generate a 0–10V signal at the analog voltage input signal terminal. When the HOA bypass option is added, the speed is controlled when the HOA switch is in the HAND position. Without the HOA bypass option, a two-position switch (labeled local/remote) is provided on the keypad to select speed reference from the speed potentiometer or a remote speed signal.	Control
K2	**Door-Mounted Speed Potentiometer with HOA Selector Switch**—Provides the drive with the ability to start/stop and adjust the speed reference from door-mounted control devices or remotely from customer supplied inputs. In HAND position, the drive will start and the speed is controlled by the door-mounted speed potentiometer. The drive will be disabled in the OFF position. When AUTO is selected, the drive run and speed control commands are via user-supplied dry contact and 4–20 mA signal.	Control
K3	**3–15 psig Follower**—Provides a pneumatic transducer which converts a 3–15 psig pneumatic signal to either 0–8 Vdc or a 1–9 Vdc signal interface with the drive. The circuit board is mounted on the inside of the front enclosure panel and connects to the user's pneumatic control system via 6 ft (1.8m) of flexible tubing and a 1/4 in (6.4 mm) brass tube union.	Control
K4	**HAND/OFF/AUTO Switch for Non-Bypass Configurations**—Provides a three-position selector switch that allows the user to select either a HAND or AUTO mode of operation. HAND mode is defaulted to keypad operation, and AUTO mode is defaulted to control from an external terminal source. These modes of operation can be configured via drive programming to allow for alternate combinations of start and speed sources. Start and speed sources include keypad, I/O and fieldbus.	Control
K5	**MANUAL/AUTO Speed Reference Switch**—Provides door-mounted selector switch for MANUAL/AUTO speed reference.	Control
K6	**START/STOP Pushbuttons**—Provide door-mounted START and STOP pushbuttons for either bypass or non-bypass configurations.	Control
KF	**Bypass Test Switch for RB and RA**—Allows the user to energize the AF drive for testing while operating the motor on the bypass controller. The Test Switch is mounted on the inside of the enclosure door.	Addl. bypass
KO	**Standard Elapsed Time Meter**—Provides a door-mounted elapsed run time meter.	Control
L1	**Power On, Run and Fault Lights**—Provide a white power on light that indicates power to the enclosed cabinets, a green run light and a red fault light that indicates a drive fault has occurred.	Light
L2	**Bypass Pilot Lights for RB, RA Bypass Options**—A green light indicates when the motor is running in inverter mode and an amber light indicates when the motor is running in bypass mode. The lights are mounted on the enclosure door, above the switches.	Addl. bypass
LE	**Red Run Pilot Light (22 mm)**—Provides a red run pilot light that indicates the drive is running.	Light
P1	**Input Circuit Breaker**—High interrupting circuit breaker that provides a means of short-circuit protection for the power cables between it and the CPX9000, and protection from high-level ground faults on the power cable. Allows a convenient means of disconnecting the CPX9000 from the line and the operating mechanism can be padlocked in the OFF position. This is factory mounted in the enclosure. Standard rating is 65 kAIC at 208/480V. 100 kAIC is available as an option.	Input
P3	**Input Line Fuses Rated to 200 kAIC**—Provide high-level fault protection of the drive input power circuit from the load side of the fuses to the input side of the power transistors. This option consists of three 200 kA fuses, which are factory mounted in the enclosure.	Input
P7	**MOV Surge Suppressor**—Provides a Metal Oxide Varistor (MOV) connected to the line side terminals and is designed to clip line side transients.	Input
P8	**TVSS Surge Protective Device with 50 kA Rating**—Provides transient voltage protection eliminating surges and spikes which can damage the diode bridge of the drive.	Input
PC	**Capacitor Contactor**—This option provides a contactor between the tuned reactor and capacitor to disconnect the capacitor from the circuit when desired, typically at light or no load conditions. This contactor is wired to a programmable relay output.	Input
PE	**Output Contactor**—Provides a means for positive disconnection of the drive output from the motor terminals. The contactor coil is controlled by the drive's run or permissive logic. NO auxiliary contacts rated at 10A, 600 Vac are provided for customer use. Bypass options **RB** and **RA** include an output contactor as standard. This option includes a low VA 115 Vac fused control power transformer and is factory mounted in the enclosure.	Output
PF	**Output Filter**—Used to reduce the transient voltage (DV/DT) at the motor terminals. The output filter is recommended for cable lengths exceeding 100 ft (30m) or for a drive rated at 525–690V. This option is mounted in the enclosure, and may be used in conjunction with a brake chopper circuit.	Output
PG	**MotoRx (300–600 ft) 1000 V/µS DV/DT Filter**—Used to reduce transient voltage (DV/DT) and peak voltages at the motor terminals. This option is comprised of a 0.5% line reactor, followed by capacitive filtering and an energy recovery/clamping circuit. Unlike the output filter (see option **PF**), the MotoRx recovers most of the energy from the voltage peaks, resulting in a lower voltage drop to the motor, and therefore conserving power. This option is used when the distance between a single motor and the drive is 300–600 ft (91–183m). *This option cannot be used with the brake chopper circuit. The output filter (option **PF**) should be investigated as an alternative.*	Output
PH	**Single Overload Relay**—Uses a bimetallic overload relay to provide additional overload current protection to the motor on configurations without bypass options. It is included with the bypass configurations for overload current protection in the bypass mode. The overload relay is mounted within the enclosure, and is manually resettable. Heater pack included.	Output
PI	**Dual Overload Relays**—This option is recommended when a single drive is operating two motors and overload current protection is needed for each of the motors. The standard configuration includes two bimetallic overload relays, each sized to protect a motor with 50% of the drive hp rating. For example, a 100 hp drive would include two overload relays sized to protect two 50 hp motors. The relays are mounted within the enclosure, and are manually resettable. Heater packs not included.	Output
PN	**Dual Overloads for Bypass**—This option is recommended when a single drive is operating two motors in the bypass mode and overload current protection is needed for each of the motors. The standard configuration includes two bimetallic overload relays, each sized to protect a motor with 50% of the drive hp rating. For example, a 100 hp drive would include two overload relays sized to protect two 50 hp motors. The relays are mounted within the enclosure, and are manually resettable.	Addl. bypass

Available Control/Communications Options, continued

Option	Description	Option Type
RA	**Manual HOA Bypass Controller**—The manual HAND/OFF/AUTO (HOA)—three-contactor—bypass option provides a means of bypassing the CFX9000, allowing the AC motor to be operated at full speed directly from the AC supply line. This option consists of an input HMCP, a fused control power transformer, and a full voltage bypass starter with a door-mounted HOA selector switch and an INVERTER/BYPASS switch. The HOA switch provides the ability to start and stop the drive in the inverter mode. IEC type input, bypass and input contactors are provided. The contactors are mechanically and electrically interlocked (see wiring diagram on **Page V6-T2-182**).	Bypass
RB	**Manual IOB Bypass Controller**—The manual INVERTER/OFF/BYPASS (IOB)—three-contactor—bypass option provides a means of bypassing the CFX9000, allowing the AC motor to be operated at full speed directly from the AC supply line. This option consists of an input HMCP, a fused control power transformer, and a full voltage bypass starter with a door-mounted IOB selector switch. IEC type input, bypass and input contactors are provided. The contactors are mechanically and electrically interlocked (see wiring diagram on **Page V6-T2-182**).	Bypass
RC	**Auto Transfer HOA Bypass Controller** —The manual HAND/OFF/AUTO (HOA)—three-contactor—bypass option provides a means of bypassing the CFX9000, allowing the AC motor to be operated at full speed directly from the AC supply line. The circuitry provides an automatic transfer of the load to "across the line" operation after a drive trip. This option consists of an input HMCP, a fused control power transformer, and a full voltage bypass starter with a door-mounted HOA selector switch and an INVERTER/BYPASS switch. The HOA switch provides the ability to start and stop the drive in either mode. IEC type input, bypass and input contactors are provided. The contactors are mechanically and electrically interlocked (see wiring diagram on **Page V6-T2-182**). Door-mounted pilot lights are provided that indicate bypass or inverter operation. A green light indicates when the motor is running in inverter mode and an amber light indicates when the motor is running in bypass mode. **WARNING**: The motor may restart when the overcurrent relay is reset when operating in bypass, unless the IOB selector switch is turned to the OFF position.	Bypass
RD	**Auto Transfer IOB Bypass Controller**—The auto INVERTER/OFF/BYPASS (IOB)—three-contactor—bypass option provides a means of bypassing the CFX9000, allowing the AC motor to be operated at full speed directly from the AC supply line. The circuitry provides an automatic transfer of the load to "across the line" operation after a drive trip. This option consists of an input HMCP, a fused control power transformer, and a full voltage bypass starter with a door-mounted IOB selector switch. IEC type input, bypass and input contactors are provided. The contactors are mechanically and electrically interlocked (see wiring diagram on **Page V6-T2-182**). Door-mounted pilot lights are provided that indicate bypass or inverter operation. A green light indicates when the motor is running in inverter mode and an amber light indicates when the motor is running in bypass mode. **WARNING**: The motor may restart when the overcurrent relay is reset when operating in bypass, unless the IOB selector switch is turned to the OFF position.	Bypass
RG	**Reduced Voltage Starter for Bypass**—Used in conjunction with bypass option RA, RB, RC or RD. This option adds ***IT.*** Series reduced voltage soft starter to bypass assembly for soft starting in bypass mode.	Bypass
S4	**Floor Stand 6 in**—Raises "F" box off the ground 6 in (152.4 mm). Recommended when box is not installed on an appropriate concrete pad.	Enclosure
S5	**Floor Stand 22 in**—Converts a Size B or C, normally wall mounted enclosure to a floor standing enclosure with a height of 22 in (558.8 mm).	Enclosure
S6	**Floor Stand 12 in**—Converts a Size C or D, normally wall mounted enclosure to a floor standing enclosure with a height of 12 in (304.8 mm).	Enclosure
S9	**Space Heater**—Prevents condensation from forming in the enclosure when the drive is inactive or in storage. Includes a thermostat for variable temperature control. Heater requires a customer supplied 115V remote supply source.	Enclosure

Enclosed Drive Options

Conformal (Varnished) Coating ①

Chassis Frame	Delivery Code	Chassis Frame	Delivery Code
FR6	FP	FR9	FP
FR7	FP	FR10	FP
FR8	FP	FR11	FP
—	—	FR12	FP

Light Options

Description	Catalog Number Suffix
Power on, run, fault LED lights (22 mm)	**L1**
Power on, fault LED lights (22 mm)	**L3**
Green LED run light (22 mm)	**LA**
Green LED stop light (22 mm)	**LD**
Red LED run light (22 mm)	**LE**
Red LED stop light (22 mm)	**LF**
Red LED fault light (22 mm)	**LG**
Power on white LED light (22 mm)	**LJ**
Miscellaneous LED light (22 mm)	**LU**

Control Options

Description	Catalog Number Suffix
Door-mounted speed potentiometer	**K1**
Door-mounted speed potentiometer with HOA selector switch	**K2**
3–15 psig follower	**K3**
HOA selector switch	**K4**
MANUAL/AUTO reference switch	**K5**
START-STOP pushbuttons	**K6**
Type D2 control relay	**SD**
On-delay relay	**SE**
Off-delay relay	**SF**
Additional terminal blocks per 4 points	**SD**

Note

① See catalog number description to order.

Bypass Control Options

Description	Catalog Number Suffix
Bypass test switch used with RA and RB	**KF**
Inverter/bypass pilot lights	**L2**

Meter Options

Description	Catalog Number Suffix
Standard elapsed time meter	**KO**
Frequency meter	**KS**
MP-3000 relay with URTD	**KV**
MP-3000 relay with URTD and CTs	**KU**

Enclosure Options

Enclosure Size	Catalog Number Suffix
Space Heater ①	
7	**S9**
8	**S9**
9	**S9**
B	**S9**
C	**S9**
D	**S9**
F	**S9**
Plastic Nameplate	
All	**SN**
Floor Stand/Enclosure Size	
6 in floor stand, size F	**S4**
22 in floor stand, size B and C	**S5**
12 in floor stand, size C and D	**S6**

208V Power Options, 7-1/2–100 hp

Description	Catalog Number Suffix
Input breaker	**P1**
Input line fusing	**P2**
Input line fuses 200 kAIC	**P3**
Output contactor	**PE**
Single overload relay	**PH**
Dual overload relays	**PI**
MOV	**P7**
50 kA surge protective device	**P8**
100 kA surge protective device	**P9**

230V Power Options, 7-1/2–125 hp

Description	Catalog Number Suffix
Input breaker	**P1**
Input line fusing	**P2**
Input line fuses 200 kAIC	**P3**
Output contactor	**PE**
Single overload relay	**PH**
Dual overload relays	**PI**
MOV	**P7**
50 kA surge protective device	**P8**
100 kA surge protective device	**P9**

480 and 575V Power Options, 7-1/2–400 hp

Description	Catalog Number Suffix
Input breaker	**P1**
Input line fusing	**P2**
Input line fuses 200 kAIC	**P3**
Output contactor	**PE**
Output filter	**PF**
MotoRx (300–600 ft) DV/DT filter	**PG**
Single overload relay	**PH**
Dual overload relays	**PI**
Input MOV	**P7**
50 kA surge protective device	**P8**
100 kA surge protective device	**P9**

208V Bypass Options, 7-1/2–100 hp

Description	Catalog Number Suffix
Manual HOA bypass controller	**RA**
IOB bypass controller	**RB**
Auto transfer HOA bypass controller	**RC**
Auto transfer IOB bypass controller	**RD**
Reduced voltage starter for bypass	**RG**
Dual overloads for bypass	**PN**

230V Bypass Options, 7-1/2–125 hp

Description	Catalog Number Suffix
Manual HOA bypass controller	**RA**
IOB bypass controller	**RB**
Auto transfer HOA bypass controller	**RC**
Auto transfer IOB bypass controller	**RD**
Reduced voltage starter for bypass	**RG**
Dual overloads for bypass	**PN**

480 and 575V Bypass Options, 7-1/2–400 hp

Description	Catalog Number Suffix
Manual HOA bypass controller	**RA**
IOB bypass controller	**RB**
Auto transfer HOA bypass controller	**RC**
Auto transfer IOB bypass controller	**RD**
Reduced voltage starter for bypass	**RG**
Dual overloads for bypass	**PN**

Note

① Requires customer-supplied 115 Vac supply.

Technical Data and Specifications

CFX9000 Drives

Description	Specification
Primary Design Features	
45–66 Hz input frequency	Standard
Output: AC volts maximum	Input Voltage Base
Output frequency range	0–320 Hz
Initial output current (I_H)	250% for 2 seconds
Overload (1 minute [I_H/I_L])	150%/110%
Enclosure space heater	Optional
Oversize enclosure	Standard
Output contactor	Optional
Bypass motor starter	Optional
Listings	UL, cUL, 508C
Protection Features	
Incoming line fuses	Optional
AC input circuit disconnect	Optional
Phase rotation insensitive	Standard
EMI filter	Standard—FR6 thru FR9 ①
Input phase loss protection	Standard
Input overvoltage protection	Standard
Line surge protection	Standard
Output short circuit protection	Standard
Output ground fault protection	Standard
Output phase protection	Standard
Overtemperature protection	Standard
DC overvoltage protection	Standard
Drive overload protection	Standard
Motor overload protection	Standard
Programmer software	Optional
Local/remote keypad	Standard
Keypad lockout	Standard
Fault alarm output	Standard
Built-in diagnostics	Standard
Surge protective device	Optional

Description	Specification
Input/Output Interface Features	
Setup adjustment provisions	
Remote keypad/display	Standard
Personal computer	Standard
Operator control provisions	
Drive mounted keypad/display	Standard
Remote keypad/display	Standard
Conventional control elements	Standard
Serial communications	Optional
115 Vac control circuit	Optional
Speed setting inputs	
Keypad	Standard
0–10 Vdc potentiometer/voltage signal	Standard
4–20 mA isolated	Configurable
4–20 mA differential	Configurable
3–15 psig	Optional
Analog outputs	
Speed/frequency	Standard
Torque/load/current	Programmable
Motor voltage	Programmable
Kilowatts	Programmable
0–10 Vdc signals	Configurable w/jumpers
4–20 mA DC signals	Standard
Isolated signals	Optional
Discrete outputs	
Fault alarm	Standard
Drive running	Standard
Drive at set speed	Programmable
Optional parameters	14
Dry contacts	2 relays Form C
Open collector outputs	1
Additional discrete outputs	Optional
Communications	
RS-232	Standard
RS-422/485	Optional
DeviceNet™	Optional
Modbus RTU	Optional
CanOpen (slave)	Optional
Profibus-DP	Optional
Lonworks®	Optional
Johnson Controls Metasys™ N2	Optional
Ethernet IP/Modbus TCP	Optional
BACnet	Optional

Note

① The EMI filter is optional in FR10.

CFX9000 Drives, continued

Description	Specification
Performance Features	
Sensorless vector control	Standard
Volts/hertz control	Standard
IR and slip compensation	Standard
Electronic reversing	Standard
Dynamic braking	Optional
DC braking	Standard
PID setpoint controller	Programmable
Critical speed lockout	Standard
Current (torque) limit	Standard
Adjustable acceleration/deceleration	Standard
Linear or S curve accel/decel	Standard
Jog at preset speed	Standard
Thread/preset speeds	7
Automatic restart	Selectable
Coasting motor start	Standard
Coast or ramp stop selection	Standard
Elapsed time meter	Optional
Standard Conditions for Application and Service	
Maximum operating ambient temperature	0 to 40°C, contact factory for 50°C ①
Storage temperature	–40 to 60°C
Humidity (maximum), non-condensing	95%
Altitude	100% load capacity (no derating) up to 3280 ft (1000m); 1% derating for each 328 ft (100m) above 3280 ft (1000m); max. 9842 ft (3000m)
Line voltage variation	+10/–15%
Line frequency variation	45–66 Hz
Efficiency	>96%
Power factor (displacement)	0.99

Standard I/O Specifications

Description	Specification
Six–digital input programmable	24V: "0" ≤10V, "1" ≥18V,R_i >5 kohms
Two–analog input configurable w/ jumpers	Voltage: 0–±10V, R_i >200 kohms Current: 0 (4)–20 mA, R_i = 250 kohms
Two–digital output programmable	Form C relays 250 Vac or 30 Vdc 2 Amp resistive
One–digital output programmable	Open collector 48 Vdc 50 mA
One–analog output programmable configurable w/jumper	0–20 mA, R_L max. 500 ohms 10 bits ±2%

I/O Specifications for Control/Communication Options

Description	Specification
Analog voltage, input	0–±10V, R_i ≥200 kilohms
Analog current, input	0 (4)–20 mA, R_i = 250 ohms
Digital input	24V: "0" ≤10V, "1" ≥18V, R_i >5 kilohms
Auxiliary voltage	24V (±20%), max. 50 mA
Reference voltage	10V ±3%, max. 10 mA
Analog current, output	0 (4)–20 mA, R_L = 500 kilohms, resolution 10 bit, accuracy ≤±2%
Analog voltage, output	0 (2)–10V, R_L ≥1 kohm, resolution 10 bit, accuracy ≤±2%
Relay output max. switching voltage	300 Vdc, 250 Vac
Relay output max. switching load	3A/24 Vdc, 300 Vdc, 250 Vac ②
Relay output max. continuous load	2A rms
Thermistor input	R_{trip} = 4.7 kohms

Notes

① Units FR10 rated 40°C.

② For applications above 3A consult instruction manual.

Wiring Diagram

Control Input/Output

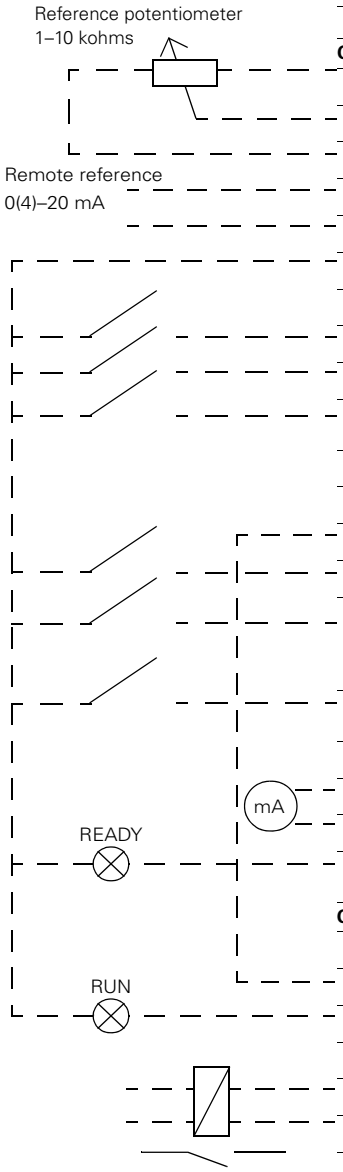

Basic Application Default I/O Configuration

Terminal		Signal	Description		
OPTA9					
1	$+10V_{ref}$	Reference output	Voltage for potentiometer, etc.		
2	AI1+	Analog input, voltage range 0–10 Vdc	Voltage input frequency reference		
3	AI1–	I/O Ground	Ground for reference and controls		
4	AI2+	Analog input, current range 0–20 mA	Current input frequency reference		
5	AI2–				
6	+24V	Control voltage output	Voltage for switches, etc. max 0.1A		
7	GND	I/O ground	Ground for reference and controls		
8	DIN1	Start forward	Contact closed = start forward		
9	DIN2	Start reverse	Contact closed = start reverse		
10	DIN3	External fault input (programmable)	Contact open = no fault Contact closed = fault		
11	CMA	Common for DIN 1–DIN 3	Connect to GND or +24V		
12	+24V	Control voltage output	Voltage for switches (see terminal 6)		
13	GND	I/O ground	Ground for reference and controls		
14	DIN4	Multi-step speed select 1	**DIN4**	**DIN5**	**Frequency Ref.**
15	DIN5	Multi-step speed select 2	Open	Open	Ref.V_{in}
			Closed	Open	Multi-step ref.1
			Open	Closed	Multi-step ref.2
			Closed	Closed	Ref_{Max}
16	DIN6	Fault reset	Contact open = no action Contact closed = fault reset		
17	CMB	Common for DIN4–DIN6	Connect to GND or +24V		
18	AO1+	Output frequency Analog output	Programmable Range 0–20 mA, R_L max. 500 ohms		
19	AO1–				
20	DO1	Digital output READY	Programmable Open collector, I ≤50 mA, V ≤48 Vdc		
OPTA2					
21	RO1	Relay output 1 RUN			
22	RO1				
23	RO1				
24	RO2	Relay output 2 FAULT			
25	RO2				
26	RO2				

Dimensions

Approximate Dimensions in Inches (mm)

Enclosure Size B—UL Type 12

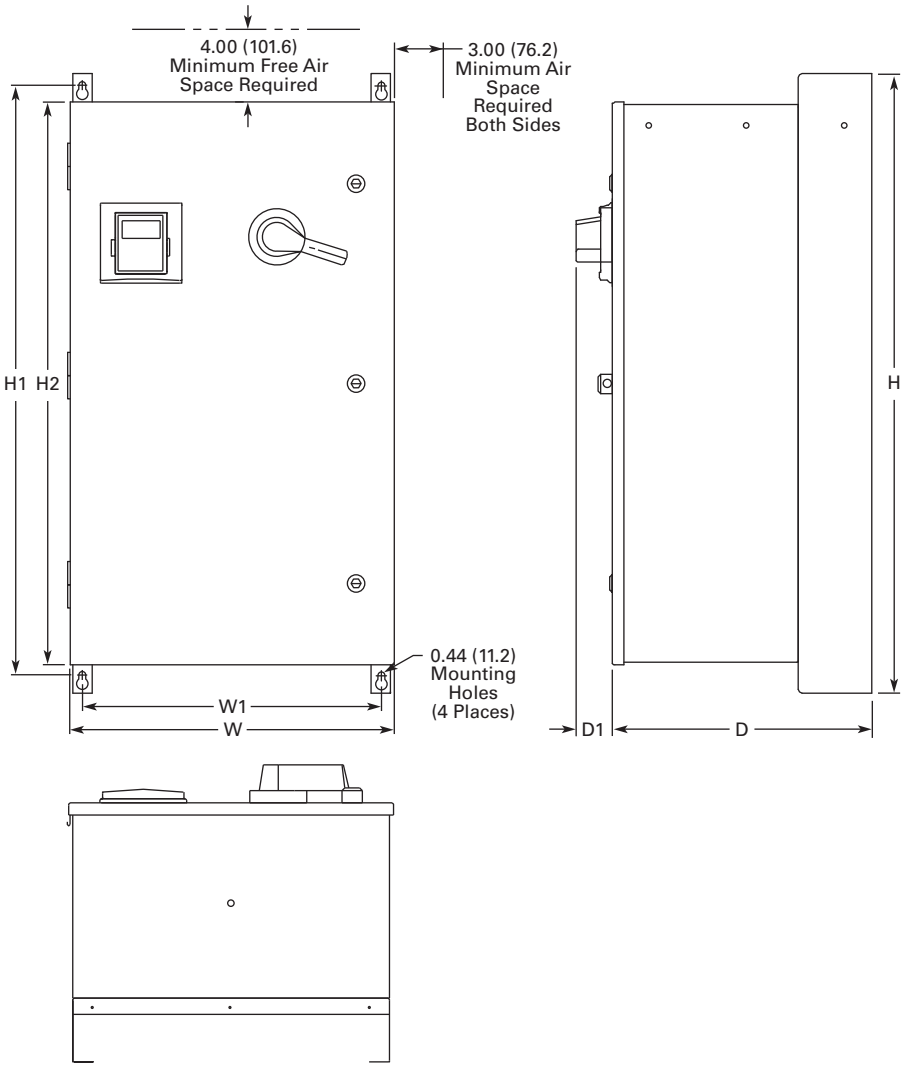

H	H1	H2	W	W1	D	D1	Approximate Weight Lbs (kg)	Approximate Shipping Weight Lbs (kg)
40.00 (1016.0)	38.00 (965.2)	36.35 (923.3)	20.92 (531.4)	19.30 (490.2)	16.76 (425.7)	2.34 (59.4)	185 (84)	229 (104)

Approximate Dimensions in Inches (mm)

Enclosure Size C—UL Type 12

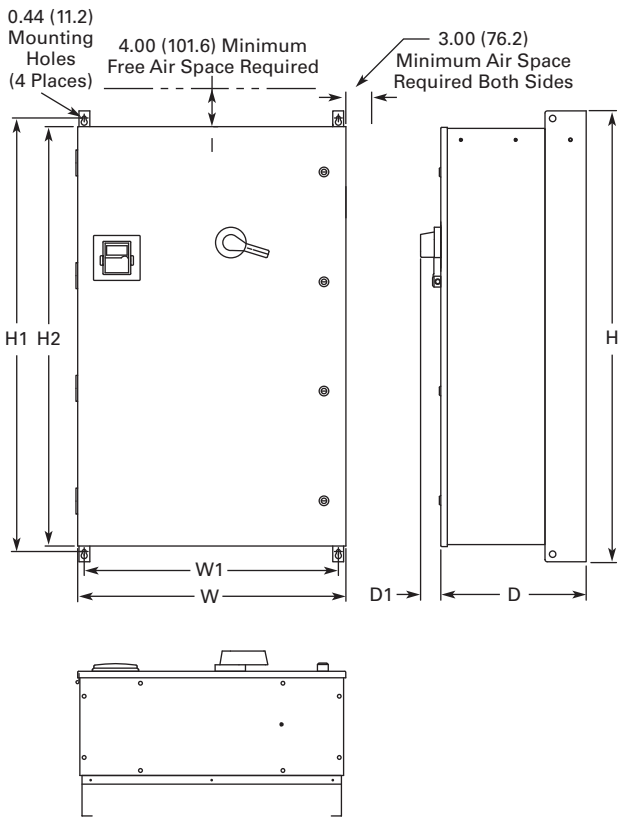

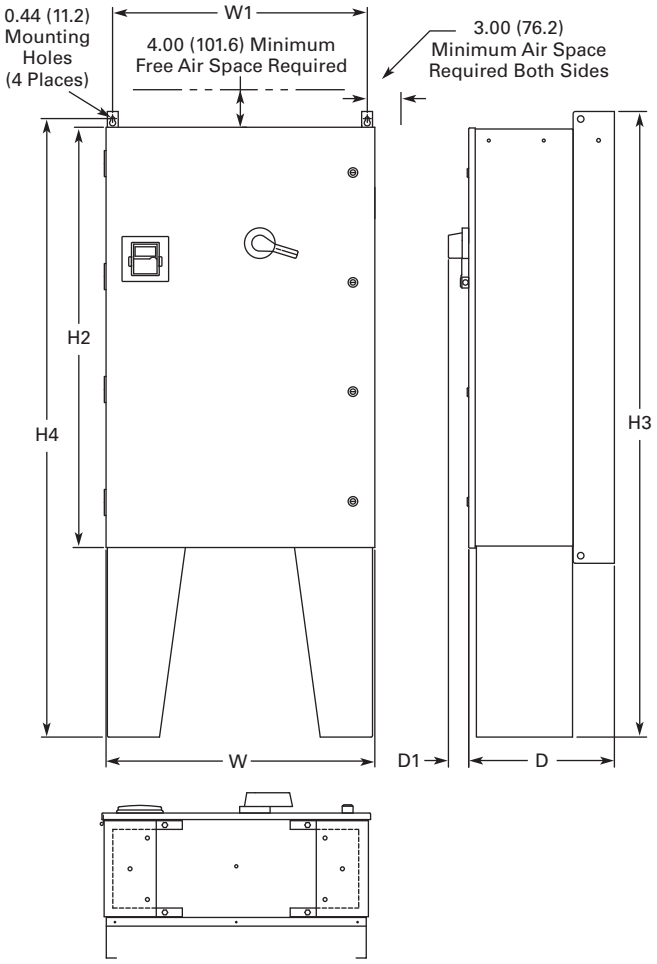

H	H1	H2	H3	H4	W	W1	D	D1	Approximate Weight Lbs (kg)	Approximate Shipping Weight Lbs (kg)
52.00 (1320.8)	50.00 (1270.0)	48.35 (1228.1)	72.00 (1828.8)	71.19 (1808.2)	30.92 (785.4)	29.30 (744.2)	16.78 (426.2)	2.34 (59.4)	320 (145)	435 (197)

Approximate Dimensions in Inches (mm)

Enclosure Size B—UL Type 3R

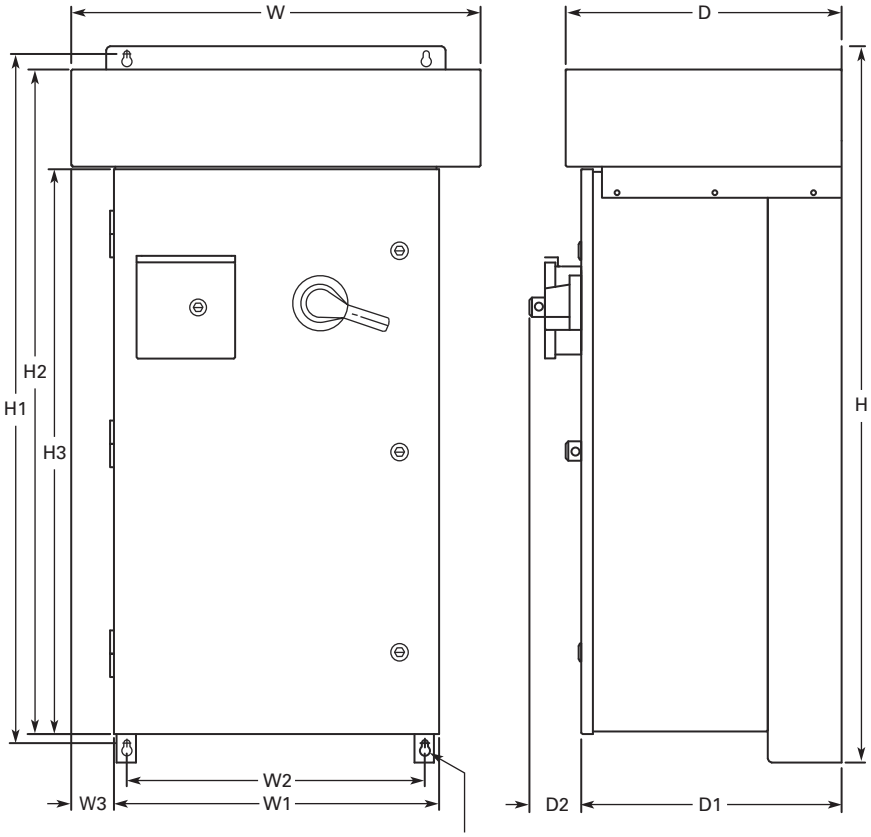

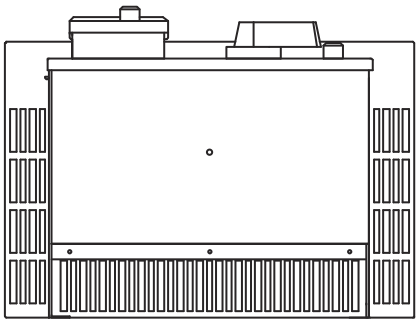

H	H1	H2	H3	W	W1	W2	W3	D	D1	D2	Approximate Weight Lbs (kg)	Approximate Shipping Weight Lbs (kg)
46.09 (1170.7)	44.45 (1129.0)	42.77 (1086.4)	36.35 (923.3)	26.31 (668.3)	20.92 (531.4)	19.30 (490.2)	2.69 (68.3)	17.74 (450.6)	16.76 (425.7)	3.31 (840.1)	235 (107)	290 (132)

Approximate Dimensions in Inches (mm)

Enclosure Size C—UL Type 3R

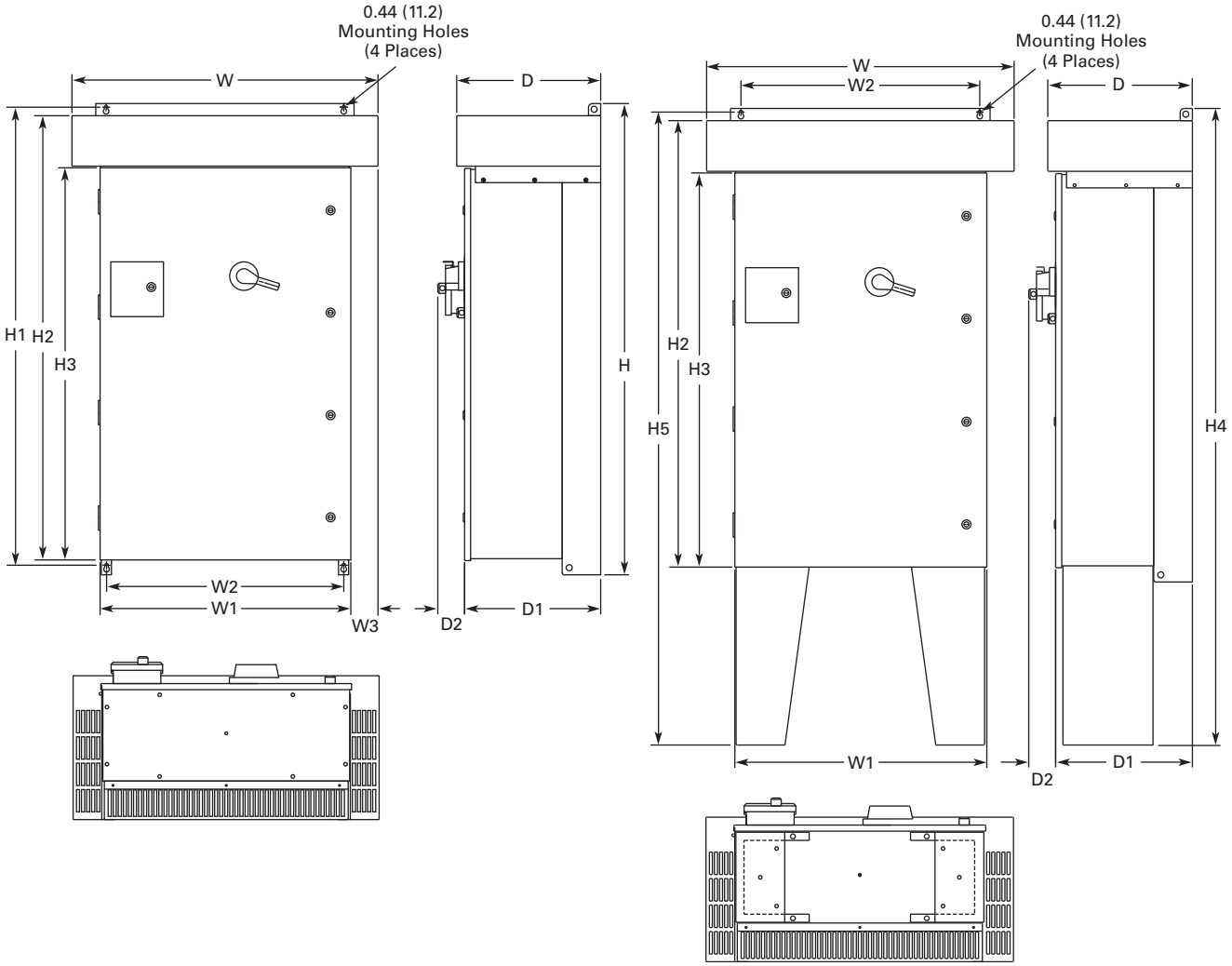

H	H1	H2	H3	H4	H5	W	W1	W2	W3	D	D1	D2	Approximate Weight Lbs (kg)	Approximate Shipping Weight Lbs (kg)
58.09 (1475.5)	56.45 (1433.8)	54.77 (1391.2)	48.35 (1228.1)	78.09 (1983.5)	77.64 (1972.1)	37.73 (958.3)	30.92 (785.4)	29.30 (744.2)	3.34 (84.8)	17.74 (450.6)	16.77 (426.0)	3.31 (840.1)	370 (168)	485 (220)

Approximate Dimensions in Inches (mm)

Enclosure Size D—UL Type 3R

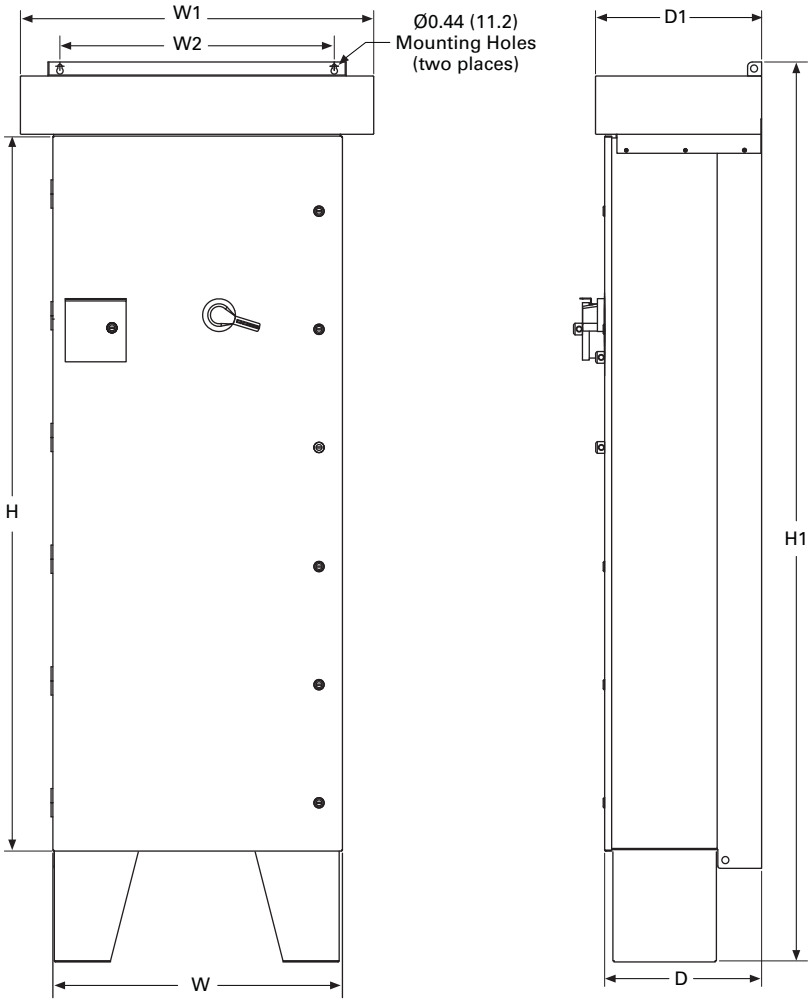

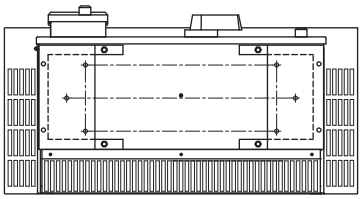

H	H1	W	W1	W2	D	D1	Approximate Shipping Weight Lbs (kg)
76.27 (1937.3)	96.00 (2438.4)	30.92 (784.4)	37.73 (958.3)	29.30 (744.2)	16.76 (424.7)	17.74 (450.6)	1000 (454)

Note

Shown with optional floor stands.

Approximate Dimensions in Inches (mm)

Enclosure Size F

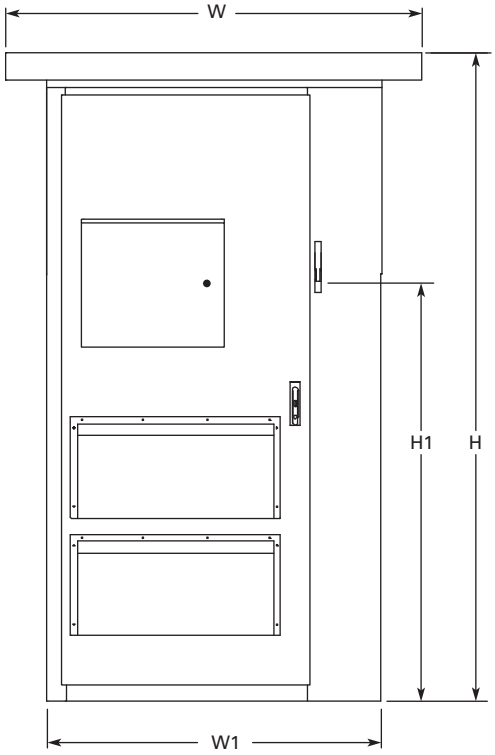

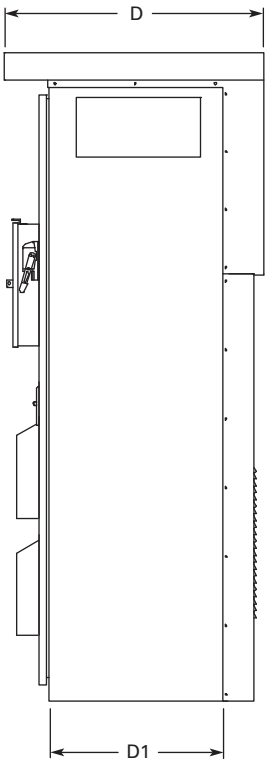

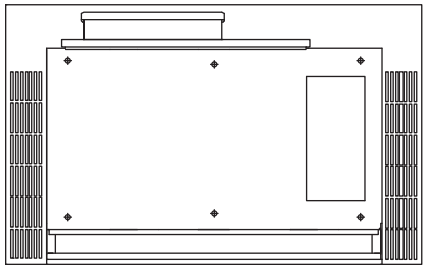

H	H1	W	W1	D	D1	Approximate Weight Lbs (kg)	Approximate Shipping Weight Lbs (kg)
93.58 (2376.9)	69.51 (1765.60)	60.00 (1524.0)	48.00 (1219.2)	37.50 (952.5)	26.00 (660.4)	1700 (771)	1850 (839)

Approximate Dimensions in Inches (mm)

Enclosure Size 7

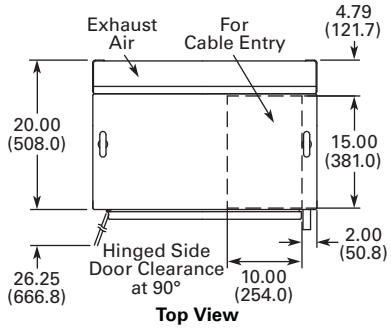

Top View

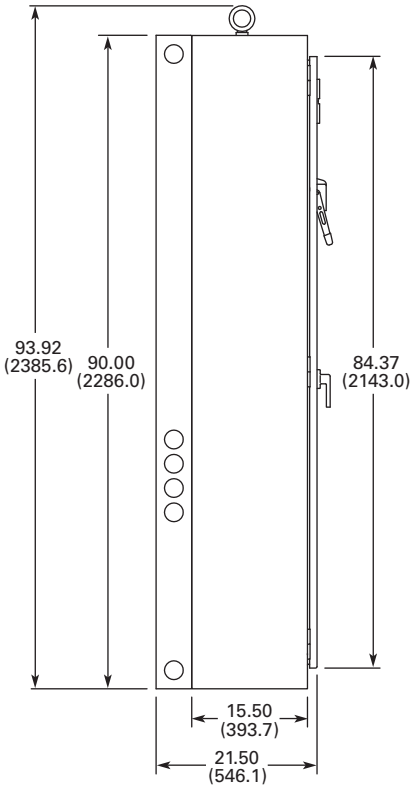

Side View

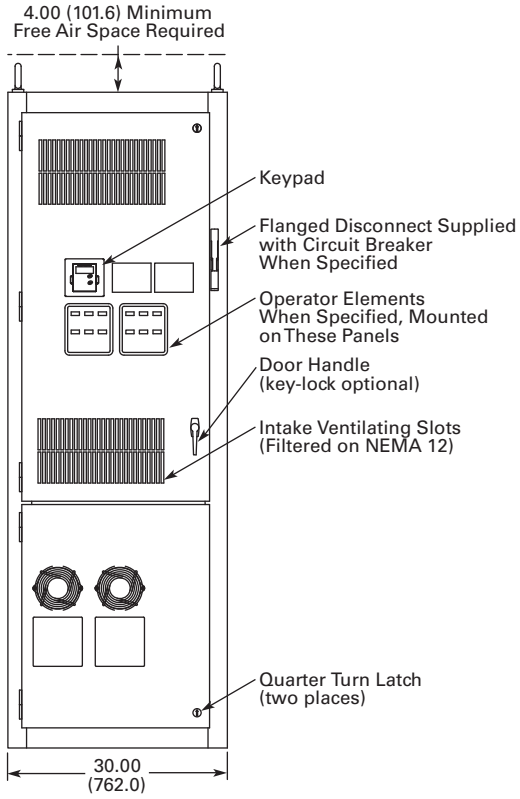

Front View

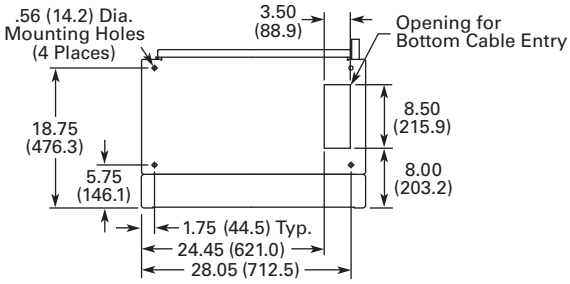

Bottom View

Construction: UL Type 1 Oversize
Finish: Enclosure – ANSI 61 Gray (Light)

Approximate Shipping Weight Lbs (kg)
1000 (454)

Approximate Dimensions in Inches (mm)

Enclosure Size 8

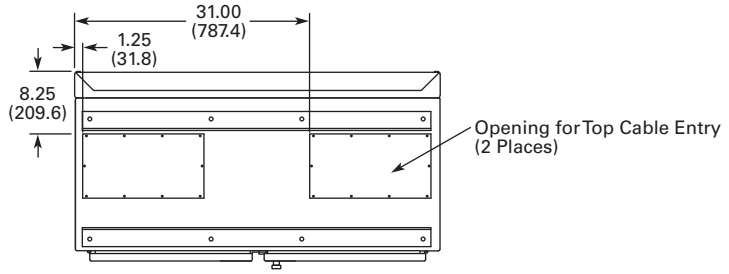

Top View

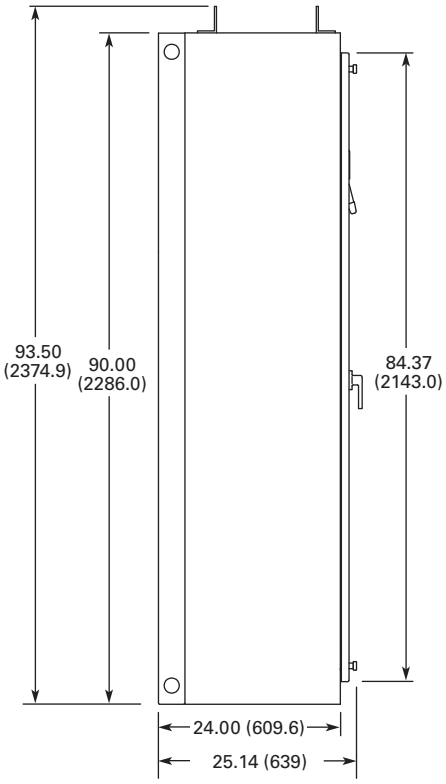

Side View

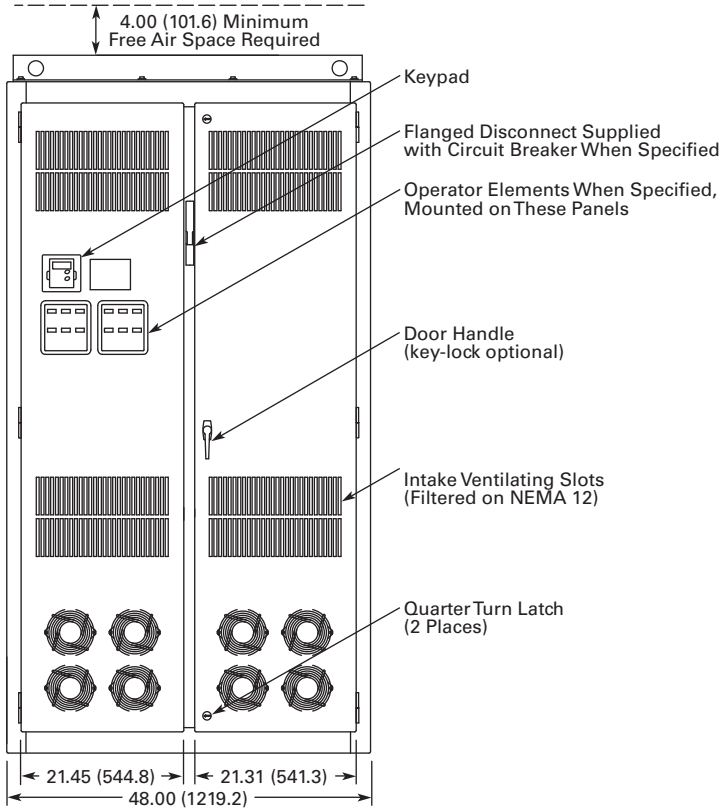

Front View

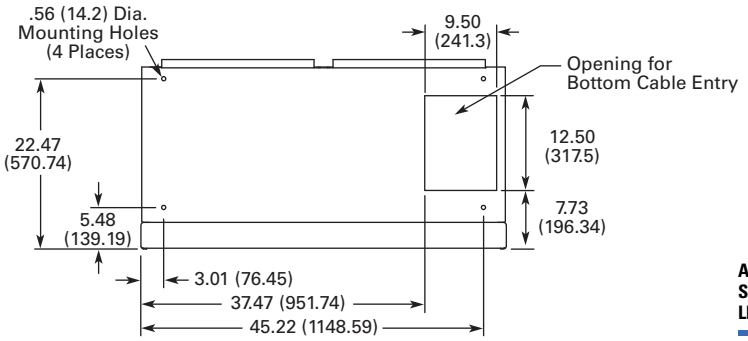

Bottom View

Construction: UL Type 1 Oversize
Finish: Enclosure – ANSI 61 Gray (Light)

Approximate Shipping Weight Lbs (kg)
1400 (636)

Approximate Dimensions in Inches (mm)

Enclosure Size 9

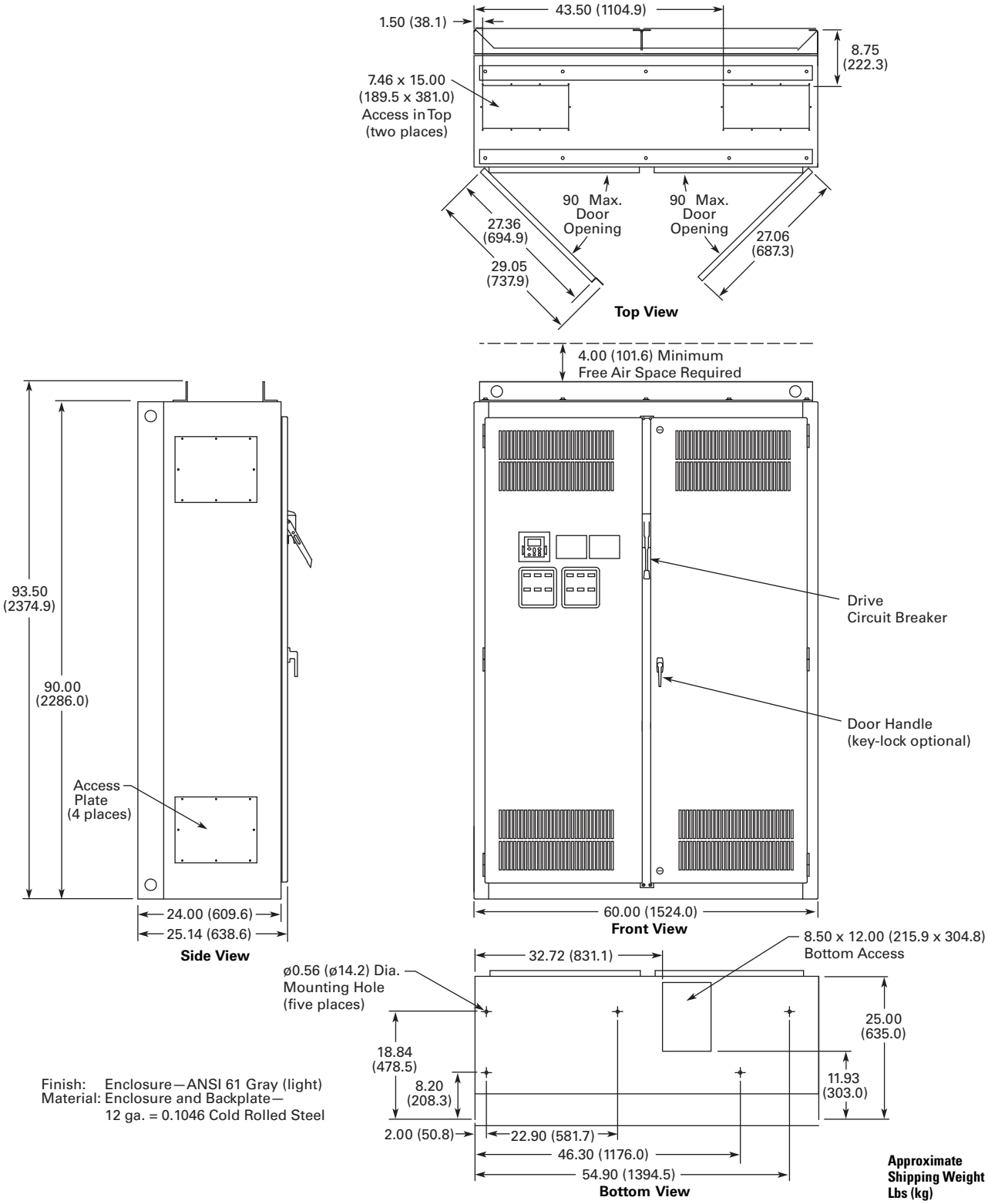

Finish: Enclosure—ANSI 61 Gray (light)
Material: Enclosure and Backplate—
12 ga. = 0.1046 Cold Rolled Steel

Approximate Shipping Weight Lbs (kg)
1800 (817)

CPX9000 Enclosed Clean Power Drives

Contents

Description	*Page*
CPX9000 Enclosed Clean Power Drives	
Application Description	**V6-T2-193**
Features and Benefits	**V6-T2-198**
Catalog Number Selection	**V6-T2-199**
Product Selection	**V6-T2-200**
Options	**V6-T2-208**
Technical Data and Specifications	**V6-T2-214**
Wiring Diagrams	**V6-T2-216**
Dimensions	**V6-T2-217**

Product Description

Eaton's CPX9000 clean power drives use advanced 18-pulse clean power technology that significantly reduces line harmonics at the drive input terminals, resulting in one of the purest sinusoidal waveforms available.

The CPX9000 drive also delivers True Power Factor—in addition to reducing harmonic distortion, the CPX9000 drive prevents upstream transformer overheating and overloading of breakers and feeders, enabling the application of adjustable frequency drives on generators and other high impedance power systems.

All 9000X Series drives are constant torque rated and rated for either high overload (I_H) or low overload (I_L). I_H indicates 150% overload capacity for 1 minute out of 10 minutes. I_L indicates 110% overload capacity for 1 minute out of 10 minutes.

CPX9000 Enclosed Products

- **Standard Enclosed**—covers a wide range of the most commonly ordered options. Pre-engineering eliminates the lead time normally associated with customer specific options. Available configurations are listed on **Pages V6-T2-199** and **V6-T2-208** to **V6-T2-213.**
- **Modified Standard Enclosed**—applies to specific customer requirements that vary from the Standard Enclosed offering, such as the need for an additional indicating light or minor modifications to drawings. *Contact your local sales office for assistance in pricing and lead time.*
- **Custom Engineered**—for those applications with more unique or complex requirements, these are individually engineered to the customer's needs. *Contact your local sales office for assistance in pricing and lead time.*

Application Description

Designed to exceed the IEEE® 519-1992 requirements for harmonic distortion, the CPX9000 is the clear choice for applications in the water, wastewater, HVAC, industrial and process industries where harmonics are a concern.

What Are Harmonics?

Take a perfect wave with a fundamental frequency of 60 Hz, which is close to what is supplied by the power company.

Perfect Wave

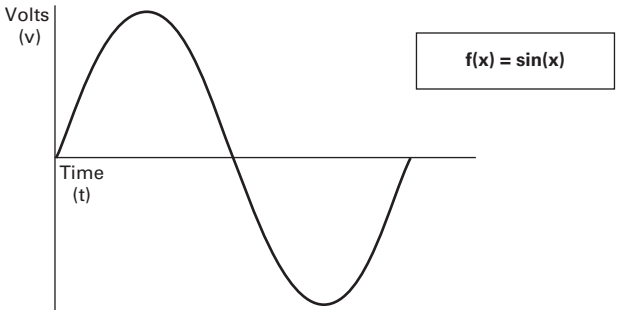

Add a second wave that is five times the fundamental frequency—300 Hz (typical of frequency added to the line by a fluorescent light).

Second Wave

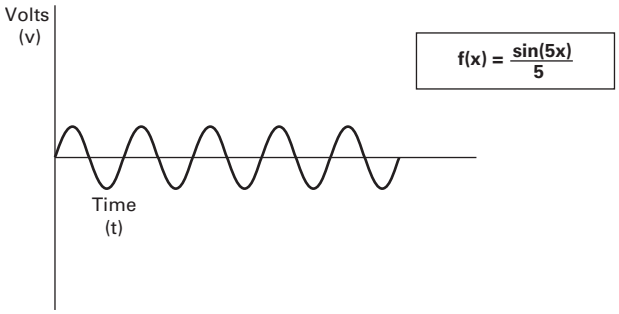

Combine the two waves. The result is a 60 Hz supply rich in fifth harmonics.

Resulting Supply

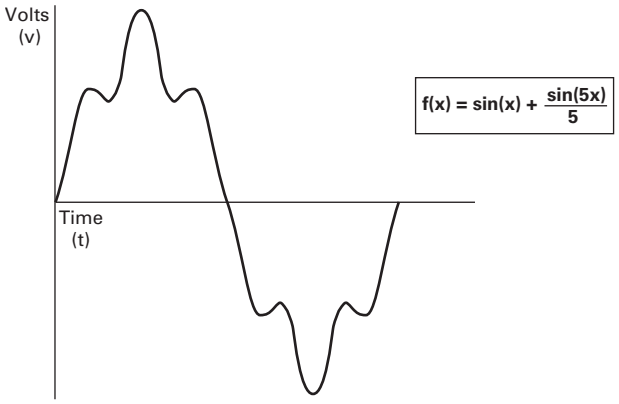

What Causes Harmonics?

Harmonics are the result of nonlinear loads that convert AC line voltage to DC. Examples of equipment that are non-linear loads are listed below:

- AC variable frequency drives
- DC drives
- Fluorescence lighting, computers, UPS systems
- Industrial washing machines, punch presses, welders, etc.

How Can Harmonics Due to VFDs Be Diminished?

By purchasing Eaton's 18-pulse CPX9000 drive that is guaranteed to meet IEEE Std. 519-1992 Harmonic Distortion Limits.

What Are Linear Loads?

Linear loads are primarily devices that run across the line and do not add harmonics. Motors are prime examples. The downside to having large motor linear loads is that they draw more energy than a VFD, because of their inability to control motor speed. In most applications, there is a turn down valve used with the motor that will reduce the flow of the material, without significantly reducing the load to the motor. While this provides some measure of speed control, it is extremely inefficient.

Why Be Concerned About Harmonics?

1. ***Installation and utility costs increase.*** Harmonics cause damage to transformers and lower efficiencies due to the IR loss. These losses can become significant and can have a dramatic effect on the HVAC systems that are controlling the temperatures of the building where the transformer and drive equipment reside.
2. ***Downtime and loss of productivity.*** Telephones and data transmissions links may not be guaranteed to work on the same power grids polluted with harmonics.
3. ***Downtime and nuisance trips of drives and other equipment.*** Emergency generators have up to three times the impedance that is found in a conventional utility source. Thus the harmonic voltage distortion can be up to three times as large, causing risk of operation problems.
4. ***Larger motors must be used.*** Motors running across the line that are connected on polluted power distribution grids can overheat or operate at lower efficiency due to harmonics.
5. ***Higher installation costs.*** Transformers and power equipment must be oversized to accommodate the loss of efficiencies. This is due to the harmonic currents circulating through the distribution without performing useful work.

How Does a VFD Convert Three-Phase AC to a Variable Output Voltage and Frequency?

The six-pulse VFD: The majority of all conventional drives that are built consist of a six-pulse configuration. The figure below represents a six-diode rectifier design that converts three-phase utility power to DC. The inverter section uses IGBTs to convert DC power to a simulated AC sine wave that can vary in frequency from 0–320 Hz.

The six-pulse VFD drive creates harmonic current distortion. The harmonic current that is created is energy that can not be used by customers and causes external heat and losses to all components including other drives that are on the same power distribution. See the curve below showing a 500 hp drive with 167A of damaging harmonic current.

Six-Diode Rectifier Design

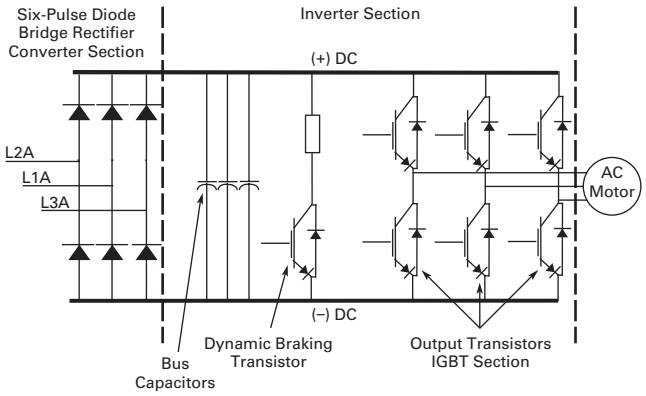

500 hp Six-Pulse Nonproductive Harmonic Current

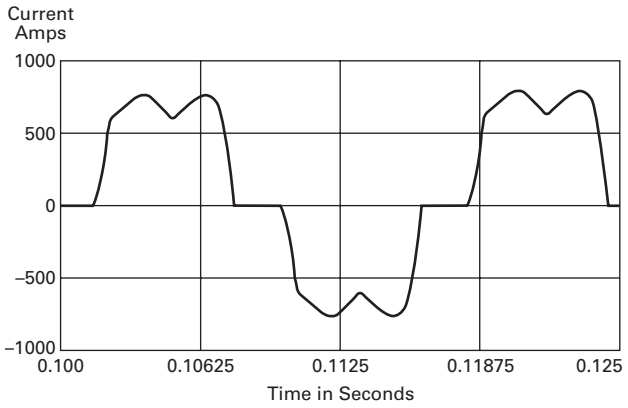

500 hp Six-Pulse Nonproductive Harmonic Current

Six-Pulse Circuit		
Current harmonics		
I_1 = 100%	I_{11} = 6.10%	I_{19} = 1.77%
I_5 = 22.5%	I_{13} = 4.06%	I_{23} = 1.12%
I_7 = 9.38%	I_{17} = 2.26%	I_{25} = 0.86%
Power = 500 hp		
Harmonic current = 167 amps		

Guidelines of Meeting IEEE Std. 519-1992 Harmonic Distortion Limits

The IEEE 519-1992 Specification is a standard that provides guidelines for commercial and industrial users that are implementing medium and low voltage equipment.

Maximum Harmonic Current Distortion in % of the Fundamental (120V through 69,000V)

	Harmonic Order (Odd Harmonics)					
Isc/I_L	h<11	11≤h<17	17≤h<23	23≤h<35	35≤h	TDD
<20	4.0	2.0	1.5	0.6	0.3	5.0
20<50	7.0	3.5	2.5	1.0	0.5	8.0
50<100	10.0	4.5	4.0	1.5	0.7	12.0
100<1000	12.0	5.5	5.0	2.0	1.0	15.0
>1000	15.0	7.0	6.0	2.5	1.4	20.0

The ratio Isc/I_L is the ratio of the short-circuit current available at the point of common coupling (PCC), to the maximum fundamental load current. Consequently, as the size of the user load decreases with respect to the size of the system, the percentage of harmonic current that the user is allowed to inject into the utility system increases.

Notes

TDD = Total demand distortion is the harmonic current distortion in percent of the maximum demand load current (15 or 30 minute demand).

I_{SC} = Maximum short circuit current at the PCC not counting motor contribution.

I_L = Maximum demand load current for all of the connected loads (fundamental frequency component) at the PCC. All of the limits are measured at a point of common coupling.

One-Line Diagram for Harmonic Analysis

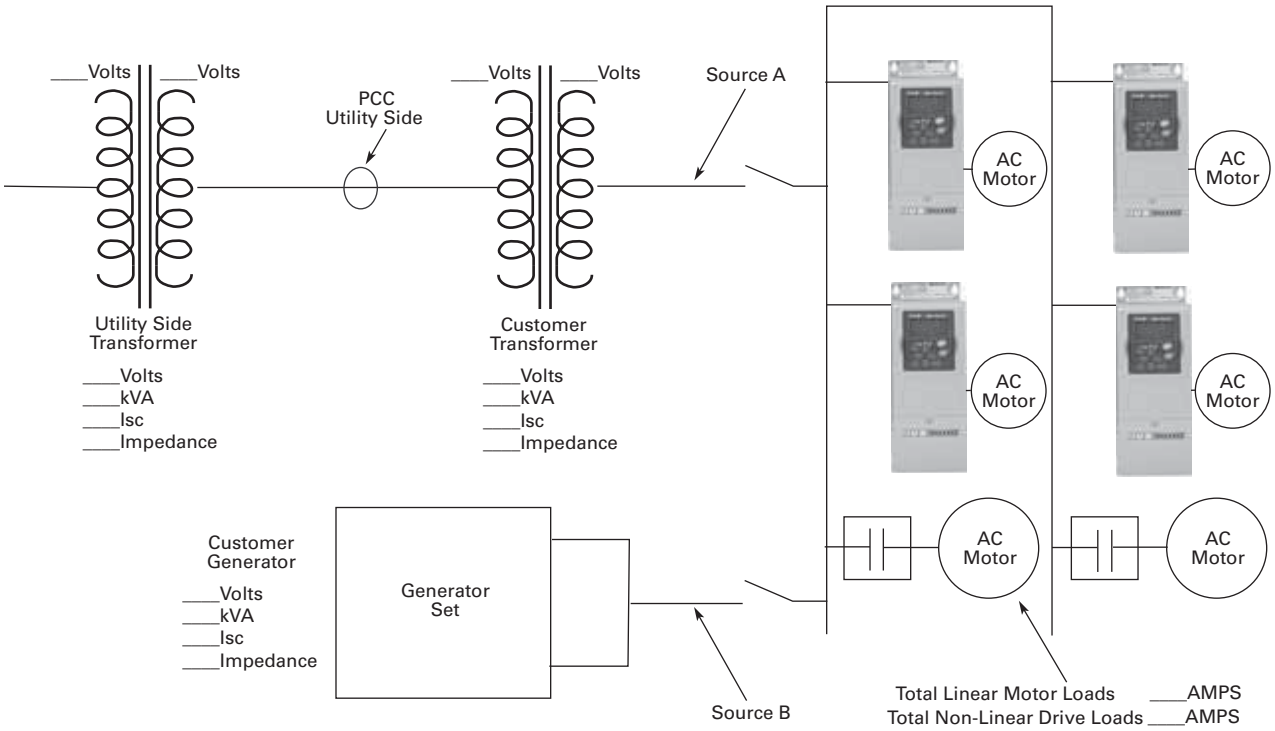

The best way to estimate AFD harmonic contribution to an electrical system is to perform a harmonic analysis based on known system characteristics. The one-line in this figure would provide the data to complete the calculations.

Terms

- PCC (Point of Common Coupling) is defined as the electrical connecting point between the utility and multiple customers per the specifications in IEEE 519
- POA (Point of Analysis) is defined as where the harmonic calculations are taken

An oscilloscope can make all measurements at the PCC or POA do an on-site harmonic evaluation.

Harmonic Reduction Methods to Meet IEEE 519

1. Line Reactor

A line reactor is a three-phase series inductance on the line side of an AFD. If a line reactor is applied on all AFDs, it is possible to meet IEEE guidelines where 10–25% of system loads are AFDs, depending on the stiffness of the line and the value of line reactance. Line reactors are available in various values of impedance, most typically 1–1.5%, 3% and 5%.

Line Reactor

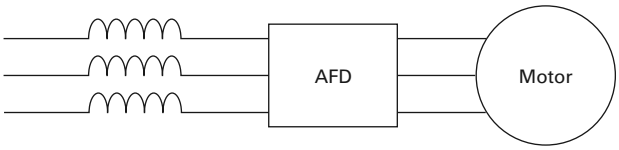

Advantages

- Low cost
- Can provide moderate reduction in voltage and current harmonics
- Available in various values of impedance
- Provides increased input protection for AFD and its semiconductors from line transients

Disadvantages

- May not reduce harmonic levels to below IEEE 519-1992 guidelines
- Voltage drop due to IR loss

2. 12-Pulse Converters

A 12-pulse converter incorporates two separate AFD input semiconductor bridges, which are fed from 30° phase shifted power sources with identical impedance. The sources may be two isolation transformers, where one is a delta/wye design (which provides the phase shift) and the second a delta/delta design (which does not phase shift). The 12-pulse arrangement allows the harmonics from the first converter to cancel the harmonics of the second. Up to approximately 85% reduction of harmonic current and voltage distortion may be achieved (over standard six-pulse converter). This permits a facility to use a larger percentage of AFD loads under IEEE 519-1992 guidelines than allowable using line reactors or DC chokes. A harmonic analysis is required to guarantee compliance with guidelines.

Basic 12-Pulse Rectifier with "Phase Shifting" Transformer

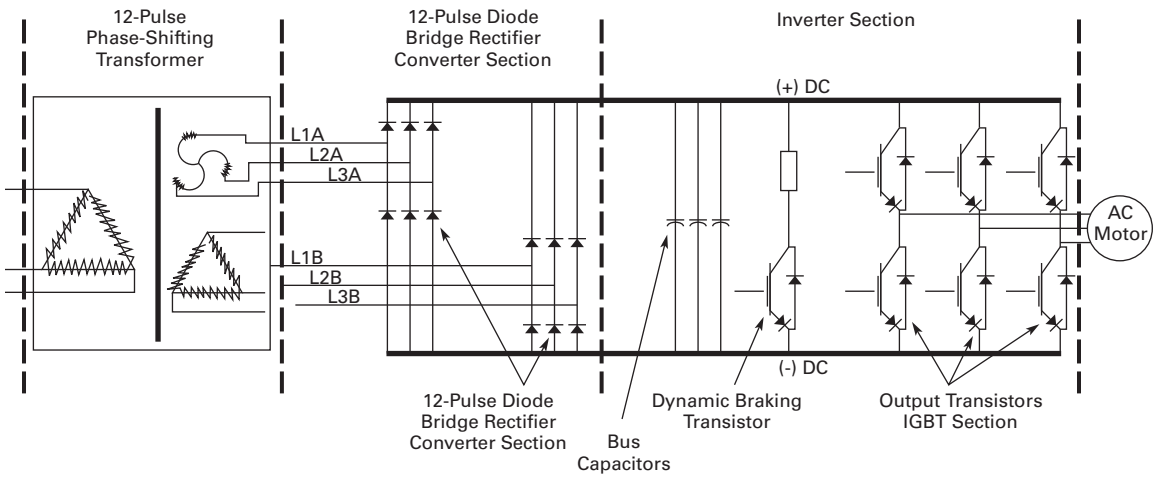

500 hp 480V Drive with 12-Pulse Rectifier

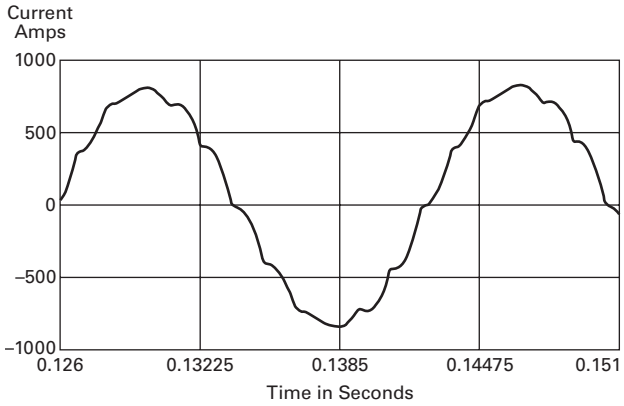

500 hp 480V Drive with 12-Pulse Rectifier

12-Pulse Circuit		
Current harmonics		
I_1 = 100%	I_{11} = 4.19%	I_{19} = 0.06%
I_5 = 1.25%	I_{13} = 2.95%	I_{23} = 0.87%
I_7 = 0.48%	I_{17} = 0.21%	I_{25} = 0.73%
Power = 500 hp		
H_c = 66.2 amps		

Advantages

- Moderate cost, although significantly more than reactors or chokes
- Substantial reduction (up to approx. 85%) in voltage and current harmonics
- Provides increased input protection for AFD and its semiconductors from line transients

Disadvantages

- Impedance matching of phase shifted sources is critical to performance
- Transformers often require separate mounting or larger AFD enclosures
- May not reduce distribution harmonic levels to below IEEE 519-1992 guidelines
- Cannot retrofit for most AFDs

3. Clean Power Drives

When the total load is of non-linear, the greatest harmonic mitigation is required. Under these conditions, the currents drawn from the supply need to be sinusoidal and "clean" such that system interference and additional losses are negligible. Eaton's CPX9000 clean power drive uses a phase-shifting auto-transformer with delta-connected winding. Three of the output phases are advanced and three are retarded. The remaining three phases of this nine-phase supply are in phase with the incoming line. This results in nine separate phases. In this type of configuration, the total required kVA rating of the transformer is only 48% of a drive rate isolation transformer. A traditional isolated transformer system, with multipulse windings, would require the full kVA rating to be supported, which is more common in an MV step-down transformer.

The integrated 18-pulse clean power drive, with near sine wave input current and low harmonics will meet the requirements of IEEE 519-1992 under all practical operating conditions. The comparisons with six-pulse and 12-pulse systems are shown, see **Pages V6-T2-194**, **V6-T2-196** and **V6-T2-197**.

Basic 18-Pulse Rectifier with Phase Shifting Transformer

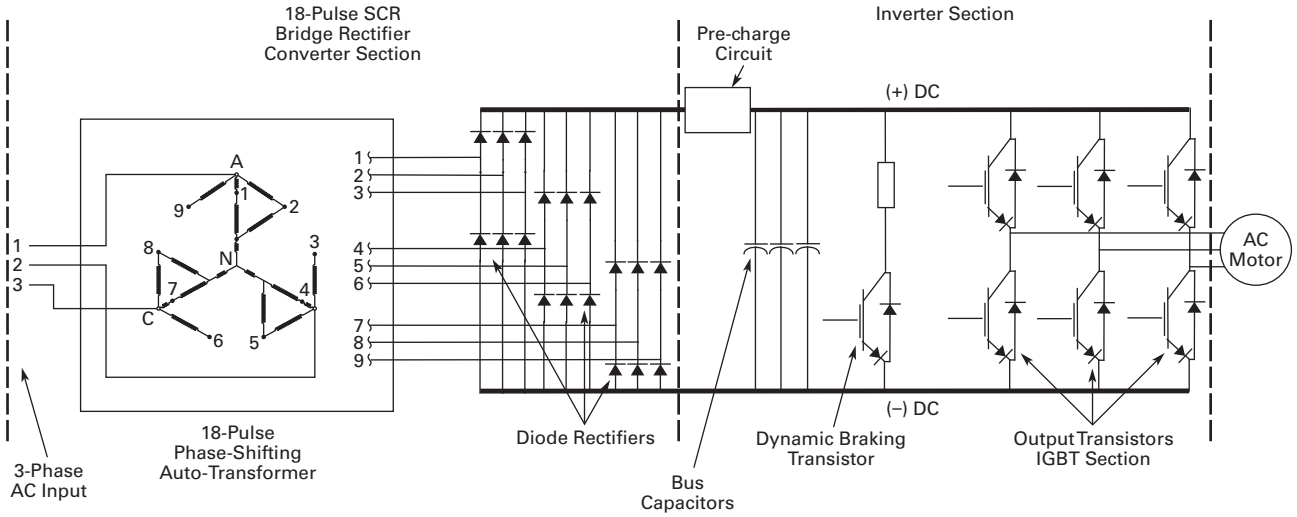

500 hp 480V Drive with 18-Pulse Rectifiers

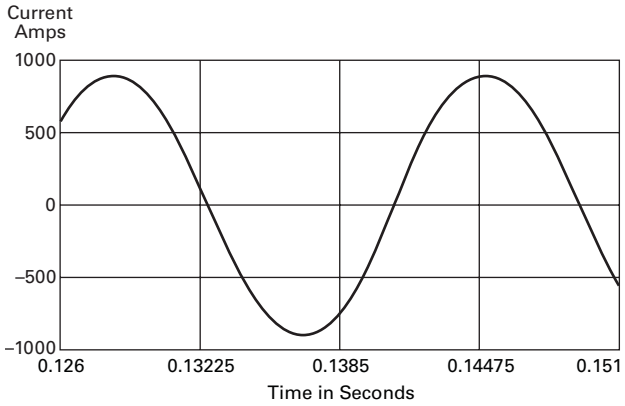

500 hp 480V Drive with 18-Pulse Rectifiers

18-Pulse Clean Power		
Current harmonics		
I_1 = 100%	I_{11} = 0.24%	I_{19} = 1.00%
I_5 = 0.16%	I_{13} = 0.10%	I_{23} = 0.01%
I_7 = 0.03%	I_{17} = 0.86%	I_{25} = 0.01%
Power = 500 hp		
H_c = 24 amps		

Advantages

- Virtually guarantees compliance with IEEE 519-1992
- Provides increased input protection for AFD and its semiconductors from line transients
- Up to four times the harmonic reduction of 12-pulse methods
- Smaller transformer than isolation transformer used in 12-pulse converter

Disadvantages

- Not as cost-effective as some other methods at small (<50) horsepower

Features and Benefits

CPX9000 clean power drive features include:

- Space optimized enclosure
- Simple layout for power options
- Type 1, NEMA 12 with gaskets and filters, Type 3R
- Input voltage: 480V, 208V, 575V
- Complete range of control, network and power options
- Horsepower range:
  - 480V, 25–800 hp (consult factory for larger sizes)
  - 208/230V, 25–200 hp
  - 575V, 25–800 hp (consult factory for larger sizes)
- Over 15 years of 18-pulse clean power experience
- 65 kAIC Standard at 480V and 208V
- 100 kAIC optional

Standards and Certifications

UL 508C tested, listed and approved.

Product Identification

Type 1, 25–150 hp (30 x 90 x 21.50)

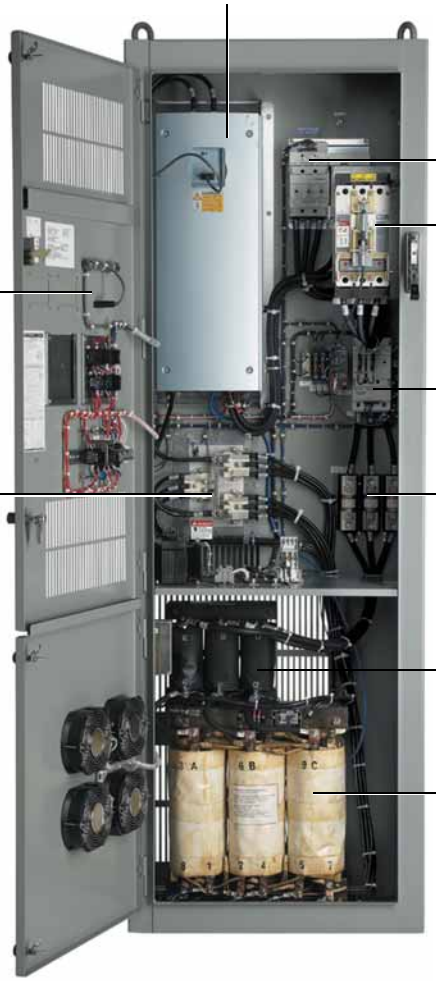

Catalog Number Selection

CPX9000 Enclosed Drive

C P X 1 0 0 1 4 A A

Product Family

CPX = Clean power 18-pulse enclosed drives

Horsepower Rating

025 = 25 hp	**100** = 100 hp	**350** = 350 hp
030 = 30 hp	**125** = 125 hp	**400** = 400 hp
040 = 40 hp	**150** = 150 hp	**500** = 500 hp
050 = 50 hp	**200** = 200 hp	**600** = 600 hp
060 = 60 hp	**250** = 250 hp	**700** = 700 hp
075 = 75 hp	**300** = 300 hp	**800** = 800 hp

Enclosure Rating

1 = Type 1
3 = Type 3R
6 = Type 12 filtered

Voltage Rating

2 = 230V (208–240V)
4 = 480V
5 = 575V (575–600V)

Application—Torque/Braking ①

A = I_L/no brake chopper
B = I_L/internal brake chopper
D = I_H/no brake chopper
E = I_H/internal brake chopper

Enclosed Style

A = Enclosed drive

Build options alphabetically and numerically.

Enclosed Options ②③④		Type
K1	Door-mounted speed potentiometer ⑤	Control
K2	Door-mounted speed potentiometer with HOA selector switch ⑤	Control
K3	3–15 psig follower	Control
K4	HAND/OFF/AUTO switch 0.87-inch (22 mm)	Control
K5	MANUAL/AUTO reference switch 0.87-inch (22 mm)	Control
K6	START/STOP pushbuttons 0.87-inch (22 mm)	Control
KF	Bypass test switch for RA and RB	Addl. bypass
KO	Standard elapsed time meter	Control
L1	Power, RUN and fault pilot lights	Light
L2	Bypass pilot lights for RA, RB, bypass options	Addl. bypass
LE	Red RUN light	Light
P1	Input disconnect	Input
P8	Surge protective device	Input
PE	Output contactor	Output
PF	Output filter	Output
PG	MotoRx (up to 600 ft [182.9m]) 1000 V/µS DV/DT filter	Output
PH	Single overload relay	Output
PI	Dual overload relays	Output
PN	Dual overloads for bypass	Addl. bypass
RA	Manual HOA bypass controller	Bypass
RB	Manual IOB bypass controller	Bypass
RC	Auto transfer HOA bypass controller	Bypass
RD	Auto transfer IOB bypass controller	Bypass
RG	Reduced voltage starter for bypass	Bypass
S7	10.00-inch (254.0 mm) expansion	Enclosure
S8	20.00-inch (508.0 mm) expansion	Enclosure
S9	Space heater	Enclosure

Communication Options ⑥

C2 = Modbus®	**CA** = Johnson Controls N2
C3 = PROFIBUS® DP	**CI** = Modbus TCP/Ethernet IP
C4 = LonWorks®	**CJ** = BACnet
C5 = Profibus DP (D9 connector)	**D3** = RS-232 with D9 connection
C6 = CANopen (slave)	
C7 = DeviceNet™	
C8 = Modbus (D9 Type connector)	

Control Options

B1 = 6 DI, 1 ext +24 Vdc/ext +24 Vdc
B2 = 1 RO (NC/NO), 1 RO (NO), 1 therm
B4 = 1 AI (mA isolated), 2 AO (mA isolated), 1 ext +24 Vdc/EXT +24 Vdc
B5 = 3 RO (NO)
B8 = 1 ext +24 Vdc/ext +24 Vdc, 3 Pt100
B9 = 1 RO (NO), 5 DI 42–240 Vac input

Engineered Options

HT	High temperature rating for 50°C (FR10 and above) ⑦
VB	Varnished boards

Notes

① Brake chopper is standard in drives up to 30 hp I_H or 40 hp I_L at 480V. It is optional in larger drives.
② Local/remote keypad is included as the standard control panel.
③ Some options are voltage and/or horsepower specific. Consult your Eaton representative for details.
④ See **Pages V6-T2-210** and **V6-T2-211** for complete descriptions.
⑤ Includes local/remote speed reference switch.
⑥ See **Pages V6-T2-208** and **V6-T2-209** for complete descriptions.
⑦ Consult Eaton for availability.

Product Selection

When Ordering

- Select a base catalog number that meets the application requirements—nominal horsepower, voltage and enclosure rating. (The enclosed drive's continuous output amp rating should be equal to or greater than the motor's full load amp rating.) The base-enclosed package includes a standard drive, door-mounted alphanumeric panel and enclosure.
- The CPX9000 product uses the term High Overload (I_H) in place of the term Constant Torque (CT). Likewise, Low Overload (I_L) is used in place of the term Variable Torque (VT). The new terms are a more precise description of the rating. The older terms included ambient temperature ratings in addition to overload ratings. In order to minimize enclosure size and offer the highest ambient temperature rating, overload and temperature ratings are now treated separately. Ambient temperature ratings are shown in the table below. Consult the factory for 50°C ratings of FR10 and above.

Ambient Temperature Ratings

Frame Size	I_H	I_L
FR4–FR9	50°C	50°C
FR10 and above	40°C	40°C

- If dynamic brake chopper or control/communication option is desired, change the appropriate code in the base catalog number.
- All of the programming is exactly the same as the standard SVX9000 drive.
- Select enclosed options. Add the codes as suffixes to the base catalog number in alphabetical and numeric order.

208/230V Drives

CPX9000 Drive

CPX9000 Base Drive Type 1

Enclosure Size ①	hp ②	Current (A)	Chassis Frame	Base Catalog Number ③
Low Overload Drive				
7	25	75	FR7	**CPX02512AA**
	30	88	FR7	**CPX03012AA**
	40	114	FR7	**CPX04012AA**
	50	140	FR8	**CPX05012AA**
	60	170	FR8	**CPX06012AA**
	75	205	FR8	**CPX07512AA**
8	100	300	FR9	**CPX10012AA**
9	125	340	FR8T	**CPX12512AA**
	150	410	FR8T	**CPX15012AA**
10	200	522	FR9T	**CPX20012AA**
High Overload Drive				
7	25	75	FR7	**CPX02512DA**
	30	88	FR7	**CPX03012DA**
	40	114	FR8	**CPX04012DA**
	50	140	FR8	**CPX05012DA**
	60	170	FR8	**CPX06012DA**
8	75	205	FR9	**CPX07512DA**
9	100	300	FR8T	**CPX10012DA**
	125	340	FR8T	**CPX12512DA**
10	150	410	FR9T	**CPX15012DA**
	200	522	FR9T	**CPX20012DA**

Notes

① See enclosure dimensions beginning on **Page V6-T2-217**.
② hp ratings are provided as a guideline. Drives should be sized per motor nameplate FLA.
③ The 18-pulse clean power assembly includes a standard drive, door-mounted local/remote keypad and enclosure.

CPX9000 Drive

CPX9000 Base Drive NEMA 12 Filtered

Enclosure Size ①	hp ②	Current (A)	Chassis Frame	Base Catalog Number ③
Low Overload Drive				
7	25	75	FR7	**CPX02562AA**
	30	88	FR7	**CPX03062AA**
	40	114	FR7	**CPX04062AA**
	50	140	FR8	**CPX05062AA**
	60	170	FR8	**CPX06062AA**
	75	205	FR8	**CPX07562AA**
8	100	300	FR9	**CPX10062AA**
9	125	340	FR8T	**CPX12562AA**
	150	410	FR8T	**CPX15052AA**
10	200	522	FR9T	**CPX20062AA**
High Overload Drive				
7	25	75	FR7	**CPX02562DA**
	30	88	FR7	**CPX03062DA**
	40	114	FR8	**CPX04062DA**
	50	140	FR8	**CPX05062DA**
	60	170	FR8	**CPX06062DA**
8	75	205	FR9	**CPX07562DA**
9	100	300	FR8T	**CPX10062DA**
	125	340	FR8T	**CPX12562DA**
10	150	410	FR9T	**CPX15062DA**
	200	522	FR9T	**CPX20062DA**

CPX9000 Base Drive Type 3R ④

Enclosure Size ①	hp ②	Current (A)	Chassis Frame	Base Catalog Number ③
Low Overload Drive				
7	25	75	FR7	**CPX02532AA**
	30	88	FR7	**CPX03032AA**
	40	114	FR7	**CPX04032AA**
	50	140	FR8	**CPX05032AA**
	60	170	FR8	**CPX06032AA**
	75	205	FR8	**CPX07532AA**
8	100	300	FR9	**CPX10032AA**
9	125	340	FR8T	**CPX12532AA**
High Overload Drive				
7	25	75	FR7	**CPX02532DA**
	30	88	FR7	**CPX03032DA**
	40	114	FR8	**CPX04032DA**
	50	140	FR8	**CPX05032DA**
	60	170	FR8	**CPX06032DA**
8	75	205	FR9	**CPX07532DA**
9	100	300	FR8T	**CPX10032DA**

Notes

① See enclosure dimensions beginning on **Page V6-T2-217**.
② hp ratings are provided as a guideline. Drives should be sized per motor nameplate FLA.
③ The 18-pulse clean power assembly includes a standard drive, door-mounted local/remote keypad and enclosure.
④ All Type 3R drives use the Size F enclosure.

480V Drives

CPX9000 Drive

CPX9000 Base Drive Type 1

Enclosure Size ①	hp ②	Current (A)	Chassis Frame	Base Catalog Number ③
Low Overload Drive				
7	25	38	FR6	**CPX02514BA**
	30	46	FR6	**CPX03014BA**
	40	61	FR6	**CPX04014BA**
	50	72	FR7	**CPX05014AA**
	60	87	FR7	**CPX06014AA**
	75	105	FR7	**CPX07514AA**
	100	140	FR8	**CPX10014AA**
	125	170	FR8	**CPX12514AA**
	150	205	FR8	**CPX15014AA**
8	200	261	FR9	**CPX20014AA**
	250	300	FR9	**CPX25014AA**
9	300	385	FR10	**CPX30014AA**
	350	460	FR10	**CPX35014AA**
	400	520	FR10	**CPX40014AA**
10	500	590	FR11	**CPX50014AA**
	550	650	FR11	**CPX55014AA**
	600	730	FR11	**CPX60014AA**
11	650	820	FR11	**CPX65014AA**
	700	920	FR12	**CPX70014AA**
	800	1030	FR12	**CPX80014AA**
High Overload Drive				
7	25	38	FR6	**CPX02514EA**
	30	46	FR6	**CPX03014EA**
	40	61	FR7	**CPX04014DA**
	50	72	FR7	**CPX05014DA**
	60	87	FR7	**CPX06014DA**
	75	105	FR8	**CPX07514DA**
	100	140	FR8	**CPX10014DA**
	125	170	FR8	**CPX12514DA**
8	150	205	FR9	**CPX15014DA**
	200	245	FR9	**CPX20014DA**
9	250	300	FR10	**CPX25014DA**
	300	385	FR10	**CPX30014DA**
	350	460	FR10	**CPX35014DA**
10	400	520	FR11	**CPX40014DA**
	500	590	FR11	**CPX50014DA**
	550	650	FR11	**CPX55014DA**
11	600	720	FR12	**CPX60014DA**
	650	820	FR12	**CPX65014DA**
	700	840	FR12	**CPX70014DA**

Notes

① See enclosure dimensions beginning on **Page V6-T2-217**.
② hp ratings are provided as a guideline. Drives should be sized per motor nameplate FLA.
③ The 18-pulse clean power assembly includes a standard drive, door-mounted local/remote keypad and enclosure.

CPX9000 Drive

CPX9000 Base Drive NEMA 12 Filtered

Enclosure Size ①	hp ②	Current (A)	Chassis Frame	Base Catalog Number ③
Low Overload Drive				
7	25	38	FR6	**CPX02564BA**
	30	46	FR6	**CPX03064BA**
	40	61	FR6	**CPX04064BA**
	50	72	FR7	**CPX05064AA**
	60	87	FR7	**CPX06064AA**
	75	105	FR7	**CPX07564AA**
	100	140	FR8	**CPX10064AA**
	125	170	FR8	**CPX12564AA**
	150	205	FR8	**CPX15064AA**
8	200	261	FR9	**CPX20064AA**
	250	300	FR9	**CPX25064AA**
9	300	385	FR10	**CPX30064AA**
	350	460	FR10	**CPX35064AA**
	400	520	FR10	**CPX40064AA**
10	500	590	FR11	**CPX50064AA**
	550	650	FR11	**CPX55064AA**
	600	730	FR11	**CPX60064AA**
11	650	820	FR11	**CPX65064AA**
	700	920	FR12	**CPX70064AA**
	800	1030	FR12	**CPX80064AA**
High Overload Drive				
7	25	38	FR6	**CPX02564EA**
	30	46	FR6	**CPX03064EA**
	40	61	FR7	**CPX04064DA**
	50	72	FR7	**CPX05064DA**
	60	87	FR7	**CPX06064DA**
	75	105	FR8	**CPX07564DA**
	100	140	FR8	**CPX10064DA**
	125	170	FR8	**CPX12564DA**
8	150	205	FR9	**CPX15064DA**
	200	245	FR9	**CPX20064DA**
9	250	300	FR10	**CPX25064DA**
	300	385	FR10	**CPX30064DA**
	350	460	FR10	**CPX35014DA**
10	400	520	FR11	**CPX40064DA**
	500	590	FR11	**CPX50064DA**
	550	650	FR11	**CPX55064DA**
11	600	720	FR12	**CPX60064DA**
	650	820	FR12	**CPX65064DA**
	700	840	FR12	**CPX70064DA**

Notes

① See enclosure dimensions beginning on **Page V6-T2-217**.
② hp ratings are provided as a guideline. Drives should be sized per motor nameplate FLA.
③ The 18-pulse clean power assembly includes a standard drive, door-mounted local/remote keypad and enclosure.

CPX9000 Drive

CPX9000 Base Drive Type 3R ①

Enclosure Size ②	hp ③	Current (A)	Chassis Frame	Base Catalog Number ④
Low Overload Drive				
7	25	38	FR6	**CPX02534AA**
	30	46	FR6	**CPX03034AA**
	40	61	FR6	**CPX04034AA**
	50	72	FR7	**CPX05034AA**
	60	87	FR7	**CPX06034AA**
	75	105	FR7	**CPX07534AA**
	100	140	FR8	**CPX10034AA**
	125	170	FR8	**CPX12534AA**
	150	205	FR8	**CPX15034AA**
8	200	261	FR9	**CPX20034AA**
	250	300	FR9	**CPX25034AA**
High Overload Drive				
7	25	38	FR6	**CPX02534DA**
	30	46	FR6	**CPX03034DA**
	40	61	FR7	**CPX04034DA**
	50	72	FR7	**CPX05034DA**
	60	87	FR7	**CPX06034DA**
	75	105	FR8	**CPX07534DA**
	100	140	FR8	**CPX10034DA**
	125	170	FR8	**CPX12534DA**
8	150	205	FR9	**CPX15034DA**
	200	245	FR9	**CPX20034DA**

Notes

① All Type 3R drives use the Size F enclosure.
② See enclosure dimensions beginning on **Page V6-T2-217**.
③ hp ratings are provided as a guideline. Drives should be sized per motor nameplate FLA.
④ The 18-pulse clean power assembly includes a standard drive, door-mounted local/remote keypad and enclosure.

575V Drives

CPX9000 Drive

CPX9000 Base Drive Type 1

Enclosure Size ①	hp ②	Current (A)	Chassis Frame	Base Catalog Number ③
Low Overload Drive				
7	25	27	FR6	**CPX02515AA**
	30	34	FR6	**CPX03015AA**
	40	41	FR7	**CPX04015AA**
	50	52	FR7	**CPX05015AA**
	60	62	FR8	**CPX06015AA**
	75	80	FR8	**CPX07515AA**
	100	100	FR8	**CPX10015AA**
8	125	125	FR9	**CPX12515AA**
	150	144	FR9	**CPX15015AA**
	200	208	FR9	**CPX20015AA**
9	250	261	FR10	**CPX25015AA**
	300	325	FR10	**CPX30015AA**
	400	385	FR10	**CPX40015AA**
10	500	502	FR11	**CPX50015AA**
	600	590	FR11	**CPX60015AA**
11	650	650	FR12	**CPX65015AA**
	700	750	FR12	**CPX70015AA**
	800	820	FR12	**CPX80015AA**
High Overload Drive				
7	25	27	FR6	**CPX02515DA**
	30	34	FR7	**CPX03015DA**
	40	41	FR7	**CPX04015DA**
	50	52	FR8	**CPX05015DA**
	60	62	FR8	**CPX06015DA**
	75	80	FR8	**CPX07515DA**
8	100	100	FR9	**CPX10015DA**
	125	125	FR9	**CPX12515DA**
	150	144	FR9	**CPX15015DA**
9	200	208	FR10	**CPX20015DA**
	250	261	FR10	**CPX25015DA**
	300	325	FR10	**CPX30015DA**
10	400	385	FR11	**CPX40015DA**
	450	460	FR11	**CPX45015DA**
	500	502	FR11	**CPX50015DA**
11	600	590	FR12	**CPX60015DA**
	650	650	FR12	**CPX65015DA**
	700	750	FR12	**CPX70015DA**

Notes

① See enclosure dimensions beginning on **Page V6-T2-217**.

② hp ratings are provided as a guideline. Drives should be sized per motor nameplate FLA.

③ The 18-pulse clean power assembly includes a standard drive, door-mounted local/remote keypad and enclosure.

CPX9000 Drive

CPX9000 Base Drive NEMA 12 Filtered

Enclosure Size ①	hp ②	Current (A)	Chassis Frame	Base Catalog Number ③
Low Overload Drive				
7	25	27	FR6	**CPX02565AA**
	30	34	FR6	**CPX03065AA**
	40	41	FR7	**CPX04065AA**
	50	52	FR7	**CPX05065AA**
	60	62	FR8	**CPX06065AA**
	75	80	FR8	**CPX07565AA**
	100	100	FR8	**CPX10065AA**
8	125	125	FR9	**CPX12565AA**
	150	144	FR9	**CPX15065AA**
	200	208	FR9	**CPX20065AA**
9	250	261	FR10	**CPX25065AA**
	300	325	FR10	**CPX30065AA**
	400	385	FR10	**CPX40065AA**
10	500	502	FR11	**CPX50065AA**
	600	590	FR11	**CPX60065AA**
11	650	650	FR12	**CPX65065AA**
	700	750	FR12	**CPX70065AA**
	800	820	FR12	**CPX80065AA**
High Overload Drive				
7	25	27	FR6	**CPX02565DA**
	30	34	FR7	**CPX03065DA**
	40	41	FR7	**CPX04065DA**
	50	52	FR8	**CPX05065DA**
	60	62	FR8	**CPX06065DA**
	75	80	FR8	**CPX07565DA**
8	100	100	FR9	**CPX10065DA**
	125	125	FR9	**CPX12565DA**
	150	144	FR9	**CPX15065DA**
9	200	208	FR10	**CPX20065DA**
	250	261	FR10	**CPX25065DA**
	300	325	FR10	**CPX30065DA**
10	400	385	FR11	**CPX40065DA**
	450	460	FR11	**CPX45065DA**
	500	502	FR11	**CPX50065DA**
11	600	590	FR12	**CPX60065DA**
	650	650	FR12	**CPX65065DA**
	700	750	FR12	**CPX70065DA**

Notes

① See enclosure dimensions beginning on **Page V6-T2-217**.
② hp ratings are provided as a guideline. Drives should be sized per motor nameplate FLA.
③ The 18-pulse clean power assembly includes a standard drive, door-mounted local/remote keypad and enclosure.

CPX9000 Drive

CPX9000 Base Drive Type 3R ①

Enclosure Size ②	hp ③	Current (A)	Chassis Frame	Base Catalog Number ④
Low Overload Drive				
7	25	27	FR6	**CPX02535AA**
	30	34	FR6	**CPX03035AA**
	40	41	FR7	**CPX04035AA**
	50	52	FR7	**CPX05035AA**
	60	62	FR8	**CPX06035AA**
	75	80	FR8	**CPX07535AA**
	100	100	FR8	**CPX10035AA**
8	125	125	FR9	**CPX12535AA**
	150	144	FR9	**CPX15035AA**
	200	208	FR9	**CPX20035AA**
High Overload Drive				
7	25	27	FR6	**CPX02535DA**
	30	34	FR7	**CPX03035DA**
	40	41	FR7	**CPX04035DA**
	50	52	FR8	**CPX05035DA**
	60	62	FR8	**CPX06035DA**
	75	80	FR8	**CPX07535DA**
8	100	100	FR9	**CPX10035DA**
	125	125	FR9	**CPX12535DA**
	150	144	FR9	**CPX15035DA**

Notes

① All Type 3R drives use the Size F enclosure.
② See enclosure dimensions beginning on **Page V6-T2-217**.
③ hp ratings are provided as a guideline. Drives should be sized per motor nameplate FLA.
④ The 18-pulse clean power assembly includes a standard drive, door-mounted local/remote keypad and enclosure.

Options

CPX9000 Series Option Board Kits

The CPX9000 Series drives can accommodate a wide selection of expander and adapter option boards to customize the drive for your application needs. The drive's control unit is designed to accept a total of five option boards (see figure below).

The CPX9000 Series factory- installed standard board configuration includes an A9 I/O board and an A2 relay output board, which are installed in slots A and B.

9000X Series Option Board Kits

Option Boards

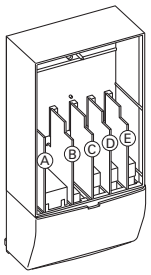

Option Board Kits

Option Kit Description ①	Allowed Slot Locations ②	Field Installed Catalog Number	Factory Installed Option Designator	SVX Ready Programs Basic	Local/ Remote	Standard	MSS	PID	Multi-P.	PFC
Standard I/O Cards										
2 RO (NC/NO)	B	**OPTA2**	—	■	■	■	■	■	■	■
6 DI, 1 DO, 2 AI, 1AO, 1 +10 Vdc ref, 2 ext +24 Vdc/ext +24 Vdc	A	**OPTA9**	—	■	■	■	■	■	■	■
Extended I/O Cards										
6 DI	B, C, **D**, E	**OPTB1**	**B1**	—	—	—	—	—	■	■
1 RO (NC/NO), 1 RO (NO), 1 therm	B, C, **D**, E	**OPTB2**	**B2**	—	—	—	—	—	■	■
1 AI (mA isolated), 2 AO (mA isolated)	B, C, **D**, E	**OPTB4**	**B4**	■	■	■	■	■	■	■
3 RO (NO)	B, C, **D**, E	**OPTB5**	**B5**	—	—	—	—	—	■	■
3 Pt100 RTD board	B, C, **D**, E	**OPTB8**	**B8**	—	—	—	—	—	■	—
1 RO (NO), 5 DI 42–240 Vac input	B, C, **D**, E	**OPTB9**	**B9**	—	—	—	—	—	■	■
Communication Cards ③										
Modbus	D, **E**	**OPTC2**	**C2**	■	■	■	■	■	■	■
Modbus TCP	D, **E**	**OPTCI**	**CI**	■	■	■	■	■	■	■
BACnet	D, **E**	**OPTCJ**	**CJ**	■	■	■	■	■	■	■
Ethernet IP	D, **E**	**OPTCK**	**CK**	■	■	■	■	■	■	■
Johnson Controls N2	D, **E**	**OPTC2**	**CA**	■	■	■	■	■	■	■
PROFIBUS DP	D, **E**	**OPTC3**	**C3**	■	■	■	■	■	■	■
LonWorks	D, **E**	**OPTC4**	**C4**	■	■	■	■	■	■	■
PROFIBUS DP (D9 connector)	D, **E**	**OPTC5**	**C5**	■	■	■	■	■	■	■
CANopen (slave)	D, **E**	**OPTC6**	**C6**	■	■	■	■	■	■	■
DeviceNet	D, **E**	**OPTC7**	**C7**	■	■	■	■	■	■	■
Modbus (D9 type connector)	D, **E**	**OPTC8**	**C8**	■	■	■	■	■	■	■
RS-232 with D9 connection	D, **E**	**OPTD3**	**D3**	■	■	■	■	■	■	■

Notes

① AI = Analog Input; AO = Analog Output, DI = Digital Input, DO = Digital Output, RO = Relay Output
② Option card must be installed in one of the slots listed for that card. Slot indicated in bold is the preferred location.
③ OPTC2 is a multi-protocol option card.

Modbus RTU Network Communications

The Modbus Network Card OPTC2 is used for connecting the 9000X Drive as a slave on a Modbus network. The interface is connected by a 9-pin DSUB connector (female) and the baud rate ranges from 300 to 19,200 baud. Other communication parameters include an address range from 1 to 247; a parity of None, Odd or Even; and the stop bit is 1.

PROFIBUS Network Communications

The PROFIBUS Network Card OPTC3 is used for connecting the 9000X Drive as a slave on a PROFIBUS-DP network. The interface is connected by a 9-pin DSUB connector (female). The baud rates range from 9.6K baud to 12M baud, and the addresses range from 1 to 127.

LonWorks Network Communications

The LonWorks Network Card OPTC4 is used for connecting the 9000X Drive on a LonWorks network. This interface uses Standard Network Variable Types (SNVT) as data types. The channel connection is achieved using a FTT-10A Free Topology transceiver via a single twisted transfer cable. The communication speed with LonWorks is 78 kBits/s.

CANopen (Slave) Communications

The CANopen (Slave) Network Card OPTC6 is used for connecting the 9000X Drive to a host system. According to ISO® 11898 standard cables to be chosen for CAN bus should have a nominal impedance of 120 ohms, and specific line delay of nominal 5 nS/m. 120 ohm line termination resistors required for installation.

DeviceNet Network Communications

The DeviceNet Network Card OPTC7 is used for connecting the 9000X Drive on a DeviceNet Network. It includes a 5.08 mm pluggable connector. Transfer method is via CAN using a two-wire twisted shielded cable with two-wire bus power cable and drain. The baud rates used for communication include 125K baud, 250K baud and 500K baud.

Johnson Controls Metasys N2 Network Communications

The OPTC2 fieldbus board provides communication between the 9000X Drive and a Johnson Controls Metasys™ N2 network. With this connection, the drive can be controlled, monitored and programmed from the Metasys system. The N2 fieldbus is available as a factory-installed option and as a field-installable kit.

Modbus/TCP Network Communications

The Modbus/TCP Network Card OPTCI is used for connecting the 9000X Drive to Ethernet networks using Modbus protocol. It includes an RJ-45 pluggable connector. This interface provides a selection of standard and custom register values to communicate drive parameters. The board supports 10 Mbps and 100 Mbps communication speeds. The IP address of the board is configurable over Ethernet using a supplied software tool.

BACnet Network Communications

The BACnet Network Card OPTCJ is used for connecting the 9000X Drive to BACnet networks. It includes a 5.08 mm pluggable connector. Data transfer is Master-Slave/Token Passing (MS/TP) RS-485. This interface uses a collection of 30 Binary Value Objects (BVOs) and 35 Analog Value Objects (AVOs) to communicate drive parameters. The card supports 9.6, 19.2 and 38.4 Kbaud communication speeds and supports network addresses 1 to 127.

Ethernet/IP Network Communications

The Ethernet/IP Network Card OPTCK is used for connecting the 9000X Drive to Ethernet/Industrial Protocol networks. It includes an RJ-45 pluggable connector. The interface uses CIP objects to communicate drive parameters (CIP is "Common Industrial Protocol," the same protocol used by DeviceNet). The board supports 10 Mbps and 100 Mbps communication speeds. The IP address of the board is configurable by Static, BOOTP and DHCP methods.

Control/Communication Option Descriptions

For availability, see Product Selection for base drive voltage required.

Available Control/Communications Options

Option	Description	Option Type
K1	**Door-Mounted Speed Potentiometer**—Provides the CPX9000 with the ability to adjust the frequency reference using a door-mounted potentiometer. This option uses the 10 Vdc reference to generate a 0–10V signal at the analog voltage input signal terminal. When the HOA bypass option is added, the speed is controlled when the HOA switch is in the HAND position. Without the HOA bypass option, a two-position switch (labeled local/remote) is provided on the keypad to select speed reference from the speed potentiometer or a remote speed signal.	Control
K2	**Door-Mounted Speed Potentiometer with HOA Selector Switch**—Provides the CPX9000 with the ability to start/stop and adjust the speed reference from door-mounted control devices or remotely from customer-supplied inputs. In HAND position, the drive will start and the speed is controlled by the door-mounted speed potentiometer. The drive will be disabled in the OFF position. When AUTO is selected, the drive run and speed control commands are via user-supplied dry contact and 4–20 mA signal.	Control
K3	**3–15 psig Follower**—Provides a pneumatic transducer that converts a 3–15 psig pneumatic signal to either 0–8 Vdc or a 1–9 Vdc signal interface with the CPX9000. The circuit board is mounted on the inside of the front enclosure panel and connects to the user's pneumatic control system via 6 ft (1.8m) of flexible tubing and a 1/4 inch (6.4 mm) brass tube union.	Control
K4	**HAND/OFF/AUTO Switch for Non-Bypass Configurations**—Provides a three-position selector switch that allows the user to select either a HAND or AUTO mode of operation. HAND mode is defaulted to keypad operation, and AUTO mode is defaulted to control from an external terminal source. These modes of operation can be configured via drive programming to allow for alternate combinations of start and speed sources. Start and speed sources include Keypad, I/O and fieldbus.	Control
K5	**MANUAL/AUTO Speed Reference Switch**—Provides door-mounted selector switch for MANUAL/AUTO speed reference.	Control
K6	**START/STOP Pushbuttons**—Provide door-mounted START and STOP pushbuttons for either bypass or non-bypass configurations.	Control
KF	**Bypass Test Switch for RB and RA**—Allows the user to energize the AF drive for testing while operating the motor on the bypass controller. The Test Switch is mounted on the inside of the enclosure door.	Addl. bypass
KO	**Standard Elapsed Time Meter**—Provides a door-mounted elapsed run-time meter.	Control
L1	**Power On and Fault Power Lights**—Provide a white Power On light that indicates power to the enclosed cabinet and a red fault light that indicates a drive fault has occurred.	Light
L2	**Bypass Pilot Lights for RB, RA Bypass Options**—A green light indicates when the motor is running in Inverter mode and an amber light indicates when the motor is running in Bypass mode. The lights are mounted on the enclosure door, above the switches.	Addl. bypass
LE	**Red Run Pilot Light 0.87-Inch (22 mm)**—Provides a red Run pilot light that indicates the drive is running.	Light
P1	**Input Circuit Breaker**—High interrupting circuit breaker that provides a means of short-circuit protection for the power cables between it and the CPX9000, and protection from high-level ground faults on the power cable. Allows a convenient means of disconnecting the CPX9000 from the line and the operating mechanism can be padlocked in the OFF position. This is factory mounted in the enclosure. Standard rating is 65 kAIC at 208/480V. 100 kAIC is available as an option.	Input
PE	**Output Contactor**—Provides a means for positive disconnection of the drive output from the motor terminals. The contactor coil is controlled by the drive's run or permissive logic. NC and NO auxiliary contacts rated at 10A, 600 Vac are provided for customer use. Bypass options **RB** and **RA** include an output contactor as standard. This option includes a low VA 115 Vac fused control power transformer and is factory mounted in the enclosure.	Output
PF	**Output Filter**—Used to reduce the transient voltage (DV/DT) at the motor terminals. The output filter is recommended for cable lengths exceeding 100 ft (30.5m) with a drive of 3 hp and above, for cable lengths of 33 ft (10.1m) with a drive of 2 hp and below, or for a drive rated at 525–690V. This option is mounted in the enclosure.	Output
PG	**MotoRx (300–600 Ft) 1000 V/µS DV/DT Filter**—Used to reduce transient voltage (DV/DT) and peak voltages at the motor terminals. This option is comprised of a 0.5% line reactor, followed by capacitive filtering and an energy recovery/clamping circuit. Unlike the output filter (see option **PF**), the MotoRx recovers most of the energy from the voltage peaks, resulting in a lower voltage drop to the motor, and therefore conserving power. This option is used when the distance between a single motor and the drive is 300–600 ft (91.4–182.9m).	Output
PH	**Single Overload Relay**—Uses a bimetallic overload relay to provide additional overload current protection to the motor on configurations without bypass options. It is included with the bypass configurations for overload current protection in the bypass mode. The overload relay is mounted within the enclosure, and is manually resettable. Heater pack included.	Output
PI	**Dual Overload Relays**—This option is recommended when a single drive is operating two motors and overload current protection is needed for each of the motors. The standard configuration includes two bimetallic overload relays, each sized to protect a motor with 50% of the drive hp rating. For example, a 100 hp drive would include two overload relays sized to protect two 50 hp motors. The relays are mounted within the enclosure, and are manually resettable. Heater packs not included.	Output
PN	**Dual Overloads for Bypass**—This option is recommended when a single drive is operating two motors in the Bypass mode and overload current protection is needed for each of the motors. The standard configuration includes two bimetallic overload relays, each sized to protect a motor with 50% of the drive hp rating. For example, a 100 hp drive would include two overload relays sized to protect two 50 hp motors. The relays are mounted within the enclosure, and are manually resettable.	Addl. bypass

For availability, see Product Selection for base drive voltage required.

Available Control/Communications Options, continued

Option	Description	Option Type
RA	**Manual HOA Bypass Controller**—The manual HAND/OFF/AUTO (HOA)—three-contactor—bypass option provides a means of bypassing the CPX9000, allowing the AC motor to be operated at full speed directly from the AC supply line. This option consists of an input HMCP, a fused control power transformer, and a full voltage bypass starter with a door-mounted HOA selector switch and an INVERTER/BYPASS switch. The HOA switch provides the ability to start and stop the drive in the inverter mode. IEC type input, bypass and input contactors are provided. The contactors are mechanically and electrically interlocked (see wiring diagram on **Page V6-T2-216**).	Bypass
RB	**Manual IOB Bypass Controller**—The manual INVERTER/OFF/BYPASS (IOB)—three-contactor—bypass option provides a means of bypassing the CPX9000, allowing the AC motor to be operated at full speed directly from the AC supply line. This option consists of an input HMCP, a fused control power transformer, and a full voltage bypass starter with a door-mounted IOB selector switch. IEC type input, bypass and input contactors are provided. The contactors are mechanically and electrically interlocked (see wiring diagram on **Page V6-T2-216**).	Bypass
RC	**Auto Transfer HOA Bypass Controller** —The manual HAND/OFF/AUTO (HOA)—three-contactor—bypass option provides a means of bypassing the CPX9000, allowing the AC motor to be operated at full speed directly from the AC supply line. The circuitry provides an automatic transfer of the load to "across the line" operation after a drive trip. This option consists of an input HMCP, a fused control power transformer, and a full voltage bypass starter with a door-mounted HOA selector switch and an INVERTER/BYPASS switch. The HOA switch provides the ability to start and stop the drive in either mode. IEC type input, bypass and input contactors are provided. The contactors are mechanically and electrically interlocked (see wiring diagram on **Page V6-T2-216**). Door-mounted pilot lights are provided that indicate bypass or inverter operation. A green light indicates when the motor is running in inverter mode and an amber light indicates when the motor is running in bypass mode. **WARNING**: The motor may restart when the overcurrent relay is reset when operating in bypass, unless the IOB selector switch is turned to the OFF position.	Bypass
RD	**Auto Transfer IOB Bypass Controller**—The auto INVERTER/OFF/BYPASS (IOB)—three-contactor—bypass option provides a means of bypassing the CPX9000, allowing the AC motor to be operated at full speed directly from the AC supply line. The circuitry provides an automatic transfer of the load to "across the line" operation after a drive trip. This option consists of an input HMCP, a fused control power transformer, and a full voltage bypass starter with a door-mounted IOB selector switch. IEC type input, bypass and input contactors are provided. The contactors are mechanically and electrically interlocked (see wiring diagram on **Page V6-T2-216**). Door-mounted pilot lights are provided that indicate bypass or inverter operation. A green light indicates when the motor is running in inverter mode and an amber light indicates when the motor is running in bypass mode. **WARNING**: The motor may restart when the overcurrent relay is reset when operating in bypass, unless the IOB selector switch is turned to the OFF position.	Bypass
RG	**Reduced Voltage Starter for Bypass**—Used in conjunction with bypass option RA, RB, RC or RD. This option adds reduced voltage soft starter to bypass assembly for soft starting in bypass mode.	Bypass
S7	**10.00-Inch (254.0 mm) Expansion**—Expansion cabinet allows for special components, customer-supplied components or oversized cables. **NOTE:** Enclosure expansion rated Type 1 only.	Enclosure
S8	**20.00-Inch (508.0 mm) Expansion**—Expansion cabinet allows for special components, customer-supplied components or oversized cables. **NOTE:** Enclosure expansion rated Type 1 only.	Enclosure
S9	**Space Heater**—Prevents condensation from forming in the enclosure when the drive is inactive or in storage. Includes a thermostat for variable temperature control. The heater requires a customer-supplied 115V remote supply source.	Enclosure

Dissipated Watt Losses

Horsepower	40	50	60	75	100	125	150	200	250	300	350	400	450	500	600	700	800
Watts	1844	2170	2540	3040	4011	4940	5730	8020	9383	11600	13600	15700	16250	17976	20393	27200	31400

Conformal (Varnished) Coating ①

Chassis Frame	Delivery Code	Chassis Frame	Delivery Code
FR6	FP	FR9	FP
FR7	FP	FR10	FP
FR8	FP	FR11	FP
—	—	FR12	FP

480V Input Disconnect Selection ②

Horsepower	P1 Input Breaker	Bypass Motor Circuit Protector (RA, RB, RC, RD)
25	HFD3050	HMCP050K2C
30	HFD3060	HMCP100R3C
40	HFD3080	HMCP100R3C
50	HFD3100	HMCP100R3C
60	HFD3100	HMCP150T4C
75	HFD3125	HMCP150T4C
100	HFD3150	HMCP150U4C
125	HFD3200	HMCP250W5C
150	HFD3225	HMCP250W5C
200	HKD3300	HMCP400X5C
250	HKD3400	HMCP400X5C
300–400	HLD3600	HMCP600L6W
500–600	HND3800	HMCP800X7W
650–800	HND312	③

Notes

① See catalog number description to order.
② Contact factory for 208V and 575V applications.
③ Contact factory.

Enclosed Drive Options

Light Options

Description	Catalog Number Suffix
Power on, run, fault LED lights (22 mm)	**L1**
Power on, fault LED lights (22 mm)	**L3**
Green LED run light (22 mm)	**LA**
Green LED stop light (22 mm)	**LD**
Red LED run light (22 mm)	**LE**
Red LED stop light (22 mm)	**LF**
Red LED fault light (22 mm)	**LG**
Power on white LED light (22 mm)	**LJ**
Miscellaneous LED light (22 mm)	**LU**

Control Options

Description	Catalog Number Suffix
Door-mounted speed potentiometer	**K1**
Door-mounted speed potentiometer with HOA selector switch	**K2**
3–15 psig follower	**K3**
HOA selector switch	**K4**
MANUAL/AUTO reference switch	**K5**
START-STOP pushbuttons	**K6**
Type D2 control relay	**SD**
On-delay relay	**SE**
Off-delay relay	**SF**
Additional terminal blocks per 4 points	**SD**

Bypass Control Options

Description	Catalog Number Suffix
Bypass test switch used with RA and RB	**KF**
Inverter/bypass pilot lights	**L2**

Meter Options

Description	Catalog Number Suffix
Standard elapsed time meter	**KO**
Frequency meter	**KS**
MP-3000 relay with URTD	**KV**
MP-3000 relay with URTD and CTs	**KU**

Enclosure Options

Enclosure Size	Catalog Number Suffix
10.00 Inch (254.0 mm) Expansion	
7	**S7**
8	**S7**
9	**S7**
10	**S7**
11	**S7**
20.00 Inch (508.0 mm) Expansion	
7	**S8**
8	**S8**
9	**S8**
10	**S8**
11	**S8**
Space Heater ①	
7	**S9**
8	**S9**
9	**S9**
10	**S9**
11	**S9**
Plastic Nameplate	
7	**SN**
8	**SN**
9	**SN**
10	**SN**
11	**SN**

Note

① Requires customer-supplied 115 Vac supply.

208V and 230V Power Options, 25–200 hp

Description	Catalog Number Suffix
Input breaker	**P1**
Output contactor	**PE**
Single overload relay	**PH**
Dual overload relays	**PI**
MOV	**P7**
50 kA surge protective device	**P8**
100 kA surge protective device	**P9**

480 and 575V Power Options, 25–800 hp

Description	Catalog Number Suffix
Input breaker	**P1**
Output contactor	**PE**
Output filter	**PF**
MotoRx (300–600 Ft) DV/DT filter	**PG**
Single overload relay	**PH**
Dual overload relays	**PI**
Input MOV	**P7**
50 kA surge protective device	**P8**
100 kA surge protective device	**P8**

208V and 230V Bypass Options, 25–200 hp

Description	Catalog Number Suffix
Manual HOA bypass controller	**RA**
IOB bypass controller	**RB**
Auto transfer HOA bypass controller	**RC**
Auto transfer IOB bypass controller	**RD**
Reduced voltage starter for bypass	**RG**
Dual overloads for bypass	**PN**

480 and 575V Bypass Options, 25–800 hp

Description	Catalog Number Suffix
Manual HOA bypass controller	**RA**
IOB bypass controller	**RB**
Auto transfer HOA bypass controller	**RC**
Auto transfer IOB bypass controller	**RD**
Reduced voltage starter for bypass	**RG**
Dual overloads for bypass	**PN**

Technical Data and Specifications

CPX9000 Drives

Description	Specification
Primary Design Features	
45–66 Hz input frequency	Standard
Output: AC volts maximum	Input voltage base
Output frequency range	0–320 Hz
Initial output current (I_H)	250% for 2 seconds
Overload (1 minute [I_H/I_L])	150%/110%
Enclosure space heater	Optional
Oversize enclosure	Standard
Output contactor	Optional
Bypass motor starter	Optional
Listings	UL, cUL, 508C
Protection Features	
Incoming line fuses	Standard 200 kAIC rating
AC input circuit disconnect	Optional
Phase rotation insensitive	Standard
EMI filter	Standard FR6 thru FR9 ①
Input phase loss protection	Standard
Input overvoltage protection	Standard
Line surge protection	Standard
Output short-circuit protection	Standard
Output ground fault protection	Standard
Output phase protection	Standard
Overtemperature protection	Standard
DC overvoltage protection	Standard
Drive overload protection	Standard
Motor overload protection	Standard
Programmer software	Optional
Local/remote keypad	Standard
Keypad lockout	Standard
Fault alarm output	Standard
Built-in diagnostics	Standard
Surge protective device	Optional

Description	Specification
Input/Output Interface Features	
Setup adjustment provisions	
Remote keypad/display	Standard
Personal computer	Standard
Operator control provisions	
Drive mounted keypad/display	Standard
Remote keypad/display	Standard
Conventional control elements	Standard
Serial communications	Optional
115 Vac control circuit	Optional
Speed setting inputs	
Keypad	Standard
0–10 Vdc potentiometer/voltage signal	Standard
4–20 mA isolated	Configurable
4–20 mA differential	Configurable
3–15 psig	Optional
Analog outputs	
Speed/frequency	Standard
Torque/load/current	Programmable
Motor voltage	Programmable
Kilowatts	Programmable
0–10 Vdc signals	Configurable w/jumpers
4–20 mA DC signals	Standard
Isolated signals	Standard
Discrete outputs	
Fault alarm	Standard
Drive running	Standard
Drive at set speed	Programmable
Optional parameters	14
Dry contacts	2 Form C contacts available
Additional discrete outputs	Optional
Communications	
RS-232	Standard
RS-422/485	Optional
DeviceNet™	Optional
Modbus RTU	Optional
CanOpen (slave)	Optional
Profibus-DP	Optional
LonWorks	Optional
Johnson Controls Metasys N2	Optional
Ethernet IP/Modbus TCP	Optional
BACnet	Optional

Note

① The EMI filter is optional in FR10 and larger.

CPX9000 Drives

Description	Specification
Performance Features	
Sensorless vector control	Standard
Volts/hertz control	Standard
IR and slip compensation	Standard
Electronic reversing	Standard
Dynamic braking	Optional
DC braking	Standard
PID set point controller	Programmable
Critical speed lockout	Standard
Current (torque) limit	Standard
Adjustable acceleration/deceleration	Standard
Linear or S curve accel/decel	Standard
Jog at preset speed	Standard
Thread/preset speeds	7
Automatic restart	Selectable
Coasting motor start	Standard
Coast or ramp stop selection	Standard
Elapsed time meter	Optional
Carrier frequency adjustment	1–16 kHz
Standard Conditions for Application and Service	
Maximum operating ambient temperature	0–50°C up to FR9 0–40°C FR10 and larger, consult factory for 50°C rating above FR9
Storage temperature	–40 to 60°C
Humidity (maximum), noncondensing	95%
Altitude (maximum without derate)	3300 ft (1000m)
Line voltage variation	+10/–15%
Line frequency variation	45–66 Hz
Efficiency	>95%
Power factor (displacement)	0.99+
Power factor (apparent)	0.99

Standard I/O Specifications

Description	Specification
Six–digital input programmable	24V: "0" ≤10V, "1" ≥18V,R_i >5 kohms
Two–analog input configurable w/jumpers	Voltage: 0–±10V, R_i >200 kohms Current: 0 (4)–20 mA, R_i = 250 ohms
Two–digital output programmable	Form C relays 250 Vac 30 Vdc 2 amp resistive
One–analog output programmable configurable w/jumper	0–20 mA, R_L max. 500 ohms 10 bits ±2%

I/O Specifications for Control/Communication Options

Description	Specification
Analog voltage, input	0–±10V, R_i ≥200 kilohms
Analog current, input	0 (4)–20 mA, R_i = 250 ohms
Digital input	24V: "0" ≤10V, "1" ≥18V, R_i >5 kilohms
Auxiliary voltage	24V (±20%), max. 50 mA
Reference voltage	10V ±3%, max. 10 mA
Analog current, output	0 (4)–20 mA, R_L = 500 kilohms, resolution 10 bit, accuracy ≤±2%
Analog voltage, output	0 (2)–10V, R_L ≥1 kilohm, resolution 10 bit, accuracy ≤±2%
Relay output max. switching voltage	300 Vdc, 250 Vac
Relay output max. switching load	3A/24 Vdc, 300 Vdc, 250 Vac ①
Relay output max. continuous load	2A rms
Thermistor input	R_{trip} = 4.7 kohms

Note

① For applications above 3A consult instruction manual.

Wiring Diagrams

Power Diagram Up to FR9

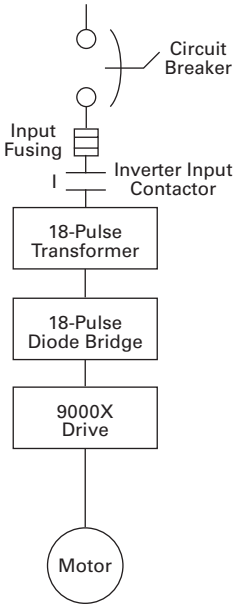

Power Diagram Up to FR9 with Bypass

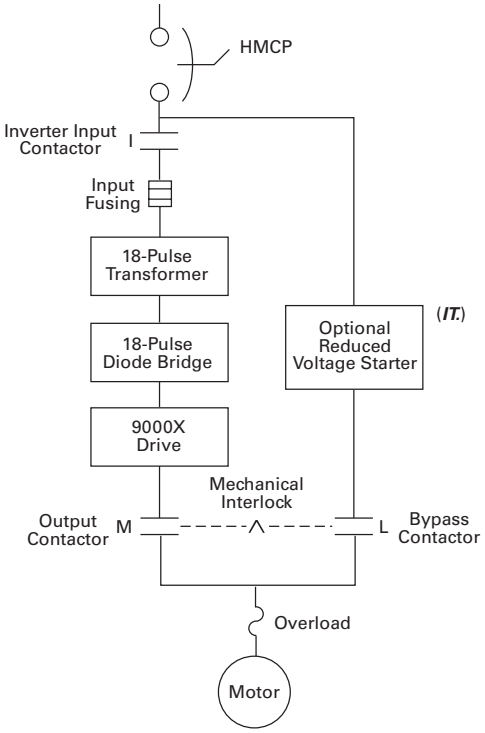

Power Diagram FR10 and Larger

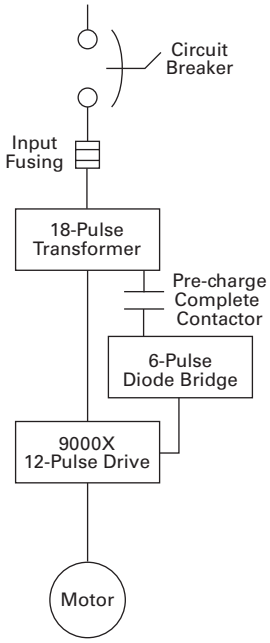

Power Diagram FR10 and Larger with Bypass

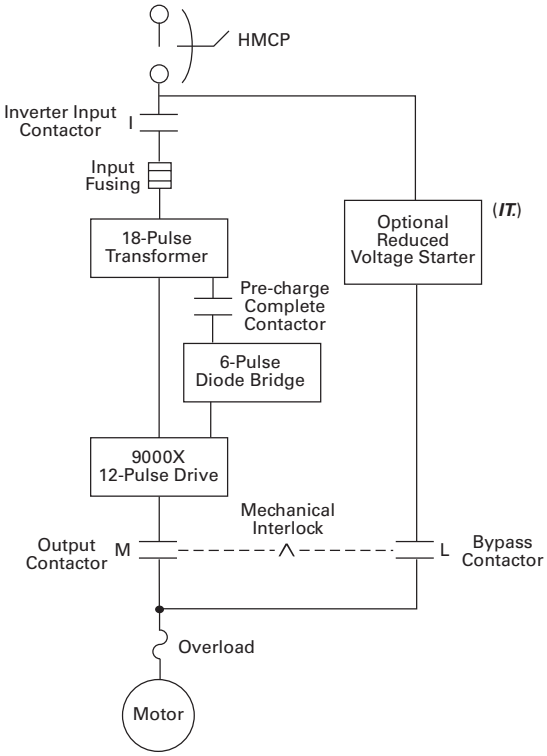

Dimensions

Approximate Dimensions in Inches (mm)

Enclosure Size 7

25–150 hp I_L and 25–125 hp I_H 480V—25–100 hp I_L and 25–75 hp I_H 575V

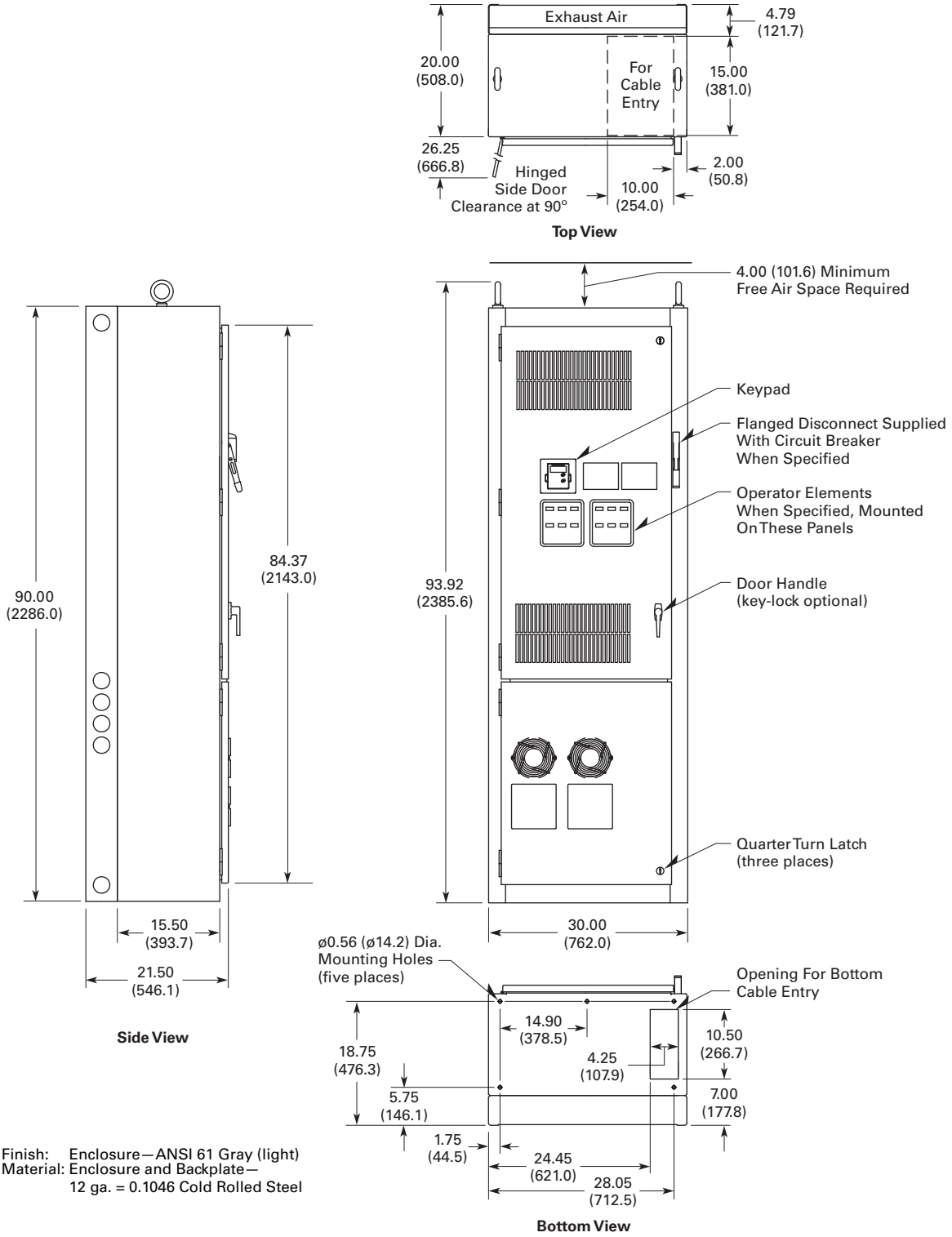

Finish: Enclosure—ANSI 61 Gray (light)
Material: Enclosure and Backplate—
12 ga. = 0.1046 Cold Rolled Steel

Approximate Dimensions in Inches (mm)

Enclosure Size 8

200–250 hp I_L and 150–200 hp I_H 480V—125–200 hp I_L and 100–150 hp I_H 575V

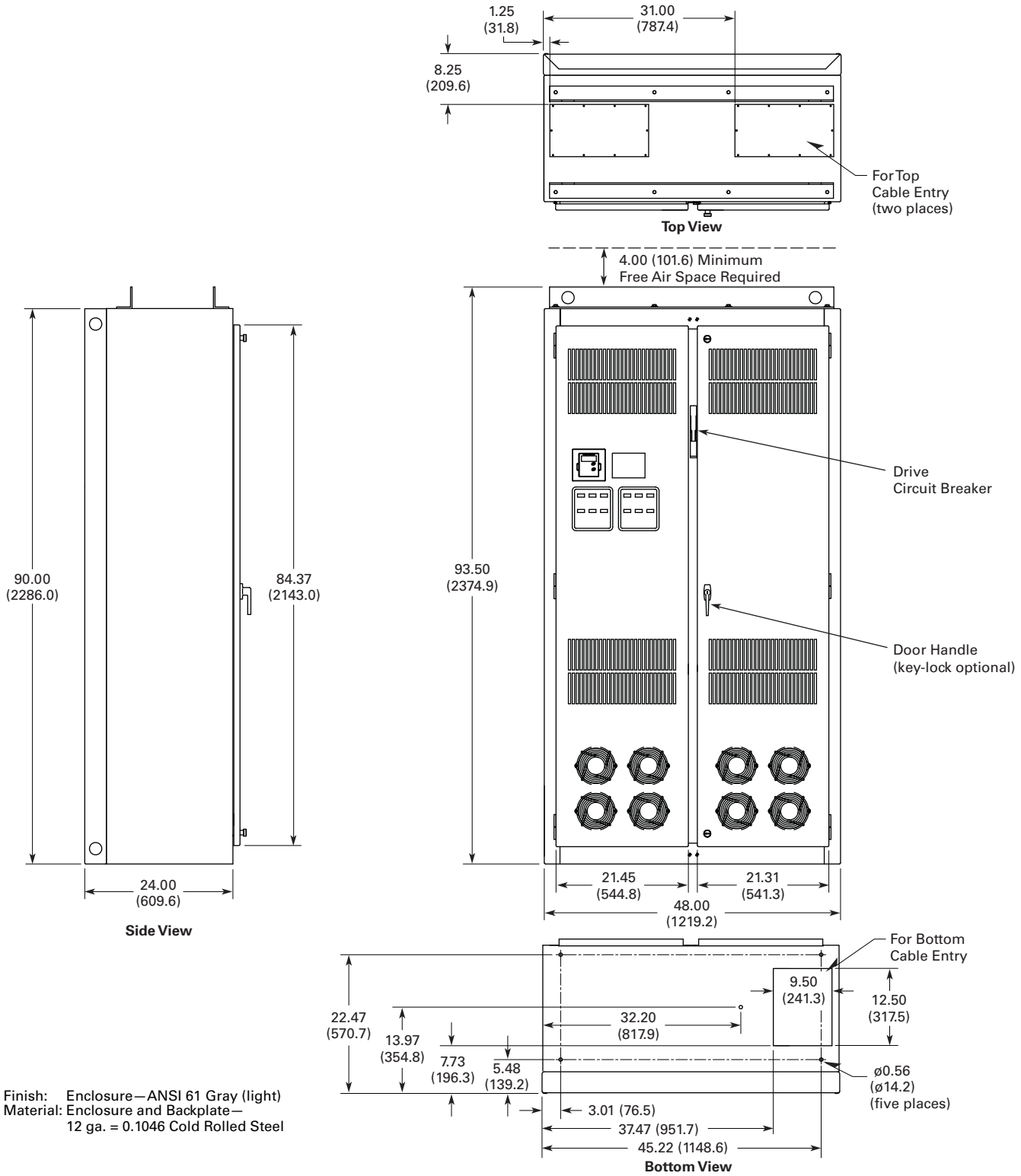

Finish: Enclosure—ANSI 61 Gray (light)
Material: Enclosure and Backplate—
12 ga. = 0.1046 Cold Rolled Steel

Approximate Dimensions in Inches (mm)

Enclosure Size 9

300–400 hp I_L and 250–350 hp I_H 480V—250–400 hp I_L and 200–300 hp I_H 575V

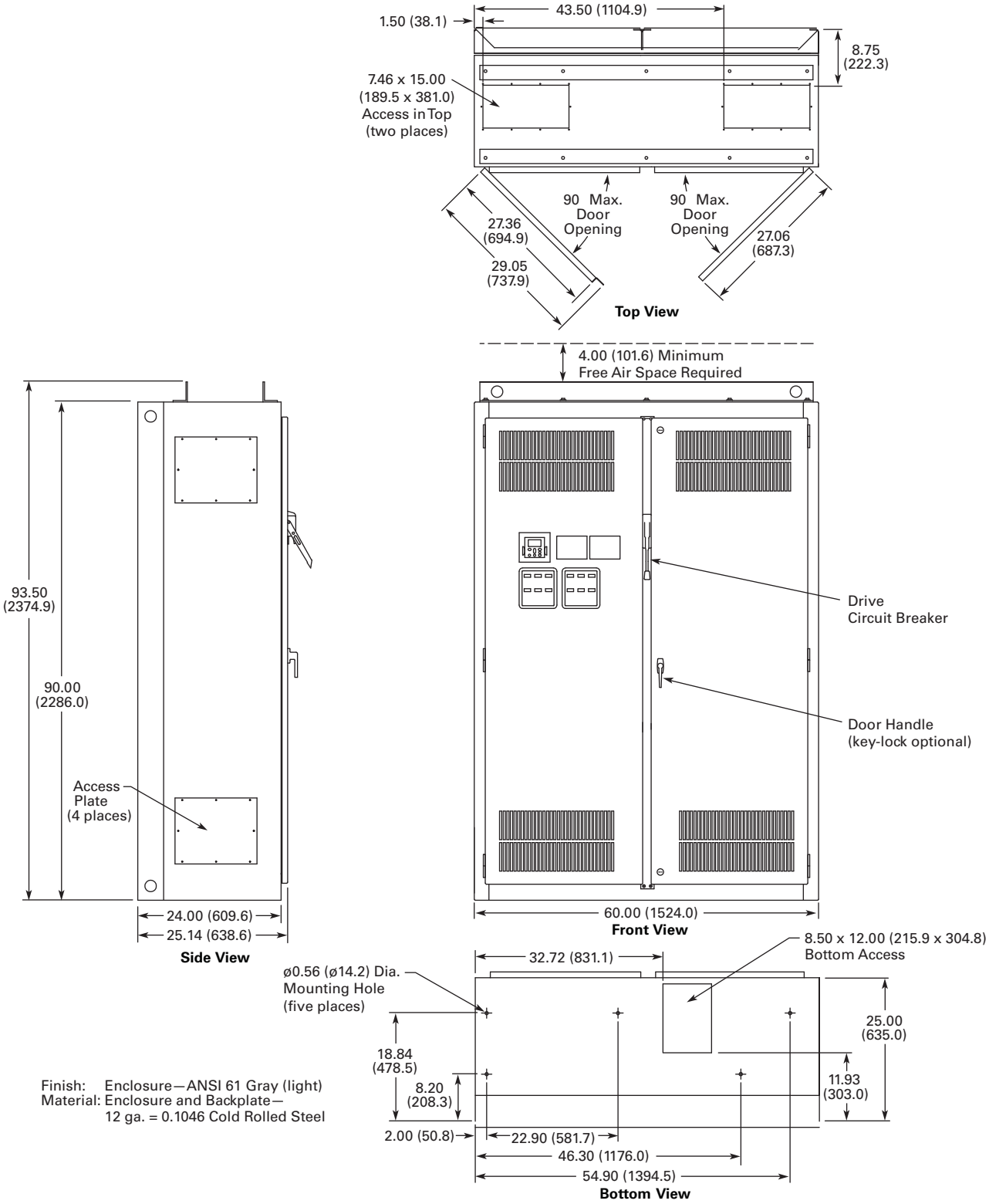

Finish: Enclosure—ANSI 61 Gray (light)
Material: Enclosure and Backplate—
12 ga. = 0.1046 Cold Rolled Steel

Approximate Dimensions in Inches (mm)

Enclosure Size 10

500–600 hp I_L and 400–500 hp I_H 480V—500–600 hp I_L and 400–500 hp I_H 575V

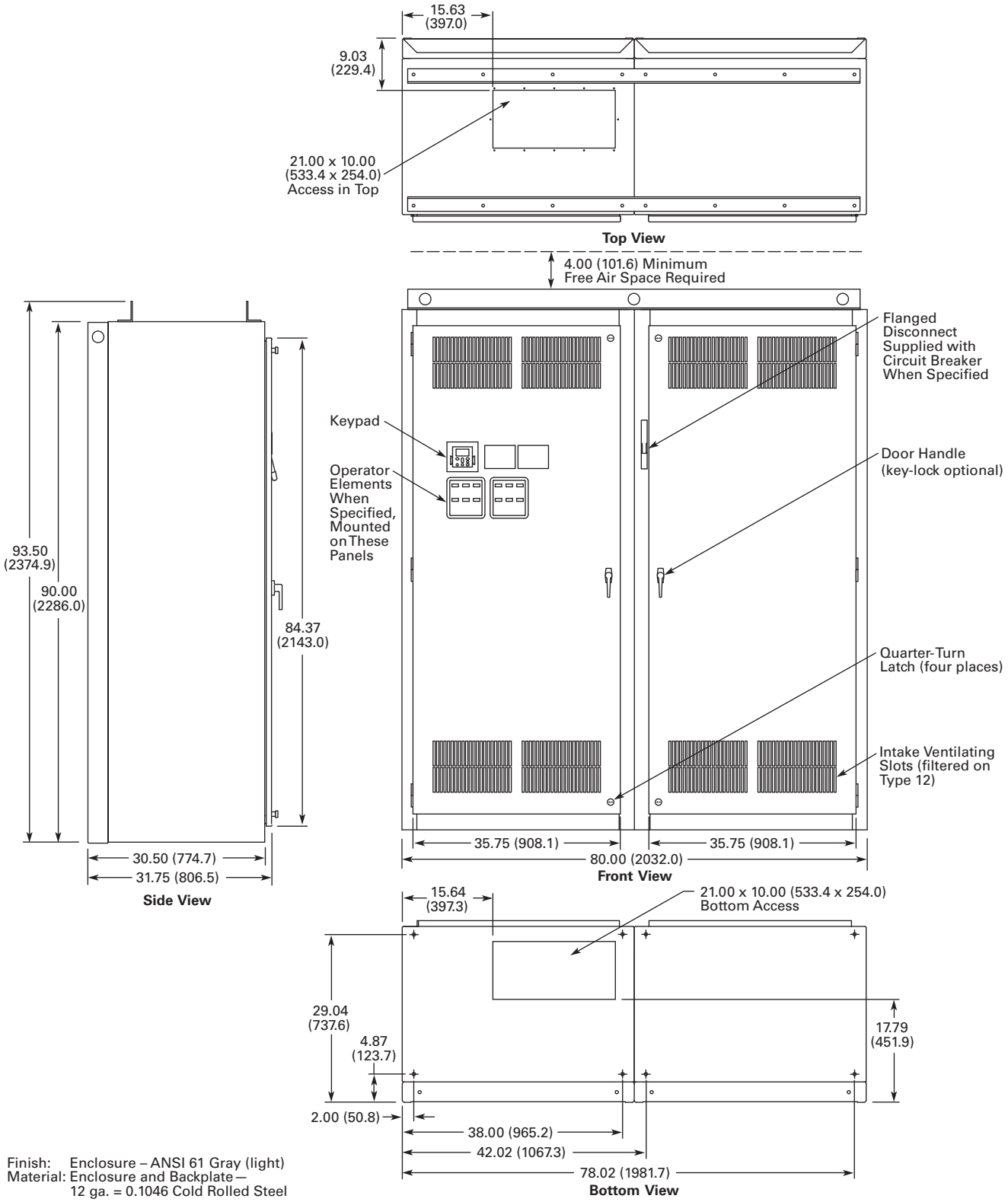

Finish: Enclosure – ANSI 61 Gray (light)
Material: Enclosure and Backplate—
12 ga. = 0.1046 Cold Rolled Steel

Approximate Dimensions in Inches (mm)

Enclosure Size F Type 3R Drives

25–250 hp I_L and 25–200 hp I_H 480V—25–200 hp I_L and 25–150 hp I_H 575V Type 3R Drives

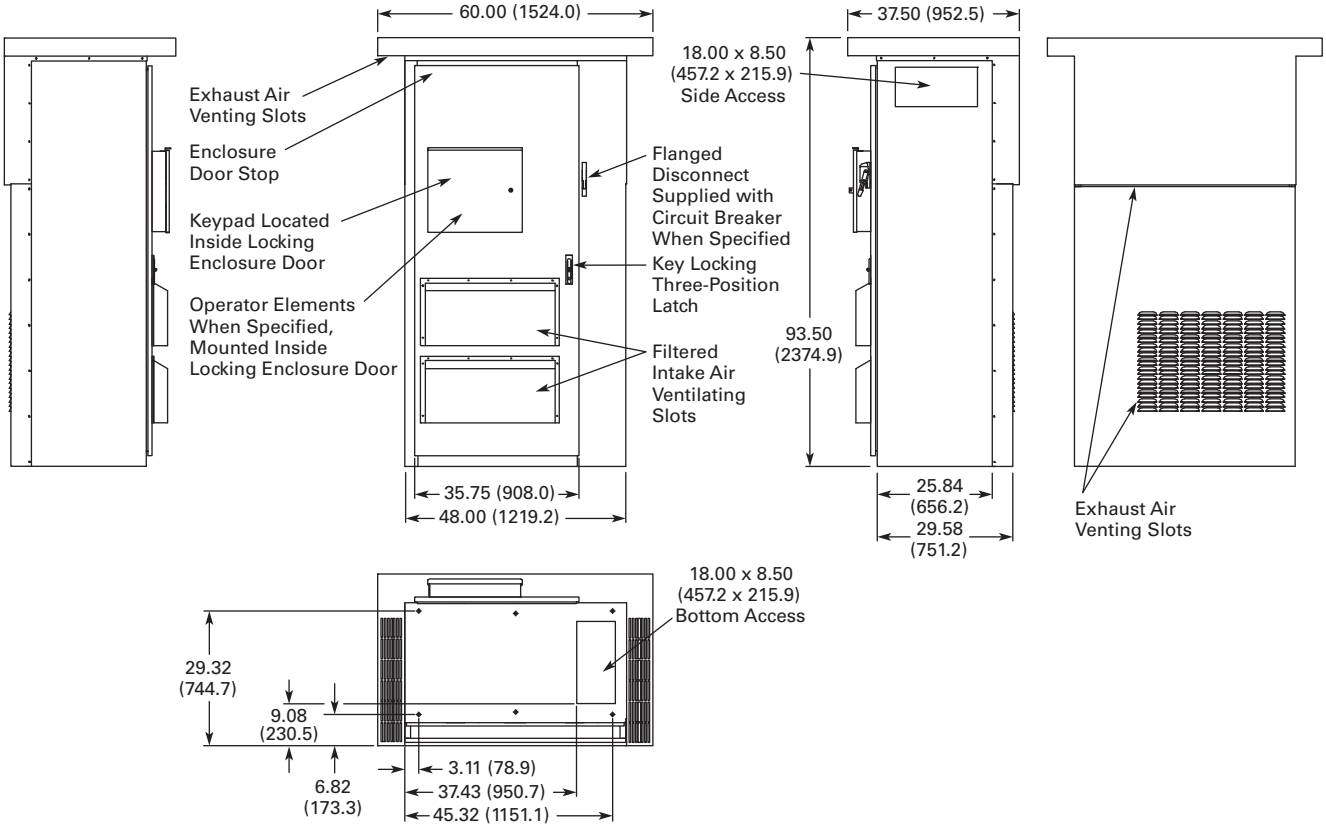

CPX9000 Enclosure Dimensions

Enclosure Size ①	Width	Height	Depth	Approx. Shipping Weight in Lbs (kg)
7	30.00 (762.0)	90.00 (2286.0)	21.50 (546.1)	1000 (454)
8	48.00 (1219.2)	90.00 (2286.0)	26.14 (664.0)	1400 (636)
9	60.00 (1524.0)	90.00 (2286.0)	25.74 (653.8)	1800 (817)
10	80.00 (2032.0)	90.00 (2286.0)	31.75 (806.5)	2100 (953)
11 ②③	120.00 (3048.0)	90.00 (2286.0)	25.74 (653.8)	2500 (1,135)
F ④	60.00 (1524.0)	93.50 (2374.9)	37.50 (952.5)	2500 (1,135)

Notes

① Enclosure sizes accommodate drive and options, including bypass and disconnect. For other power options, consult your Eaton representative.
② Consult factory. Limited power options available.
③ Enclosure size 11 consists of two of the enclosure size 9.
④ All Type 3R drives use the Size F enclosure.

LCX9000 Liquid Cooled Adjustable Frequency Drives

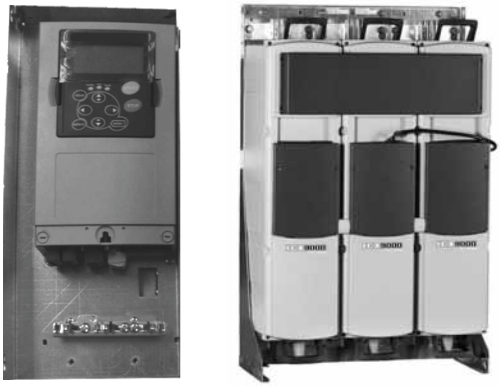

Contents

Description	*Page*
LCX9000 Drives	
Catalog Number Selection	**V6-T2-223**
Product Selection	**V6-T2-224**
Options	**V6-T2-227**
Technical Data and Specifications	**V6-T2-229**
Wiring Diagrams	**V6-T2-230**
Dimensions	**V6-T2-232**

Product Description

The LCX9000 Liquid Cooled Drive family continues Eaton's tradition of providing state-of-the-industry products, by taking advantage of liquid cooling technology in lieu of air-cooling techniques.

The LCX9000 drives are liquid-cooled products that utilize potable water or a water-glycol mixture as a cooling medium.

Features and Benefits

- Compact size and low heat transfer rates allow enclosure size to be greatly reduced, which is especially beneficial in UL Type 4X applications
- Design is modular, with control and power modules independent of each other. Connection between power and control modules can be direct or extended via a fiber optic cable
- Same reliable control module and operating system as the SPX9000 air-cooled drives
- CE mark ensures compliance with the Electromagnetic Compatibility Directive (EMC) and the Low Voltage Directive (LVD)
- Reliable drive with over 500,000 hours MTBF based on MIL 217
- Currently supports DeviceNet, PROFIBUS-DP, Modbus RTU and Modbus TCP communication protocols
- Separately mounted line reactor included with AC fed models

Standards and Certifications

- CE

CE

Catalog Number Selection

LCX9000 Liquid Cooled Adjustable Frequency Drives

LCX 016 A 0 – 4 A 3 B 2 _ _ _ _ _ _

Product Family

LCX = High performance, liquid-cooled drive

Current Rating

480V	
016 = 16A	**385** = 385A
022 = 22A	**460** = 460A
031 = 31A	**520** = 520A
038 = 38A	**590** = 590A
045 = 45A	**650** = 650A
061 = 61A	**730** = 730A
072 = 72A	**820** = 820A
087 = 87A	**920** = 920A
105 = 105A	**H10** = 1030A
140 = 140A	**H11** = 1150A
168 = 168A	**H13** = 1370A
205 = 205A	**H16** = 1640A
261 = 261A	**H20** = 2060A
300 = 300A	**H23** = 2300A
690V	
170 = 170A	**590** = 590A
208 = 208A	**650** = 650A
261 = 261A	**750** = 750A
325 = 325A	**820** = 820A
385 = 385A	**H10** = 1030A
416 = 416A	**H11** = 1180A
460 = 460A	**H13** = 1300A
502 = 502A	**H15** = 1500A

Software Series

A = Standard

Enclosure Rating

0 = Open chassis

Voltage Rating

4 = 380–500V
5 = 520–690V

Keypad

A = Alphanumeric

Input Options

3 = Three-phase, EMC T
7 = DC Input

Options

List options in alphabetical order.

Extended I/O Card Options

A3 = 2 RO, therm
A4 = Encoder low volt +5V/15V/24V
A5 = Encoder high volt +15V/24V
A7 = Dual encoder +15V/24V
A8 = 6 DI, 1 DO, 2 AI, 1AO
AE = Encoder with 2 DOs
B1 = 6 DI, 1 ext +24 Vdc/EXT +24 Vdc
B2 = 1 RO (NC-NO), 1 RO (NO), 1 therm
B4 = 1 AI (mA isolated), 2 AO (mA isolated), 1 ext +24 Vdc/EXT + 24 Vdc
B5 = 3 RO (NO)
B8 = 1 ext +24 Vdc/EXT +24 Vdc, 3 Pt100
B9 = 1 RO (NO), 5 DI 42–240 Vac input
BB = SPI, absolute encoder

Communication Cards

CA = Johnson Controls N2
CI = Modbus TCP
C2 = Modbus
C3 = Profibus DP
C4 = LonWorks
C5 = Profibus DP (D9 Connector)
C6 = CANopen (Slave)
C7 = DeviceNet
C8 = Modbus (D9 Type Connector)
D1 = Adapter
D2 = Adapter
D3 = RS-232 with D9 Connection

Board Modifications

2 = Varnished boards

Brake Chopper Options ①

N = No brake chopper circuit
B = Internal brake chopper

Note

① Brake chopper is only available in 480V CH3 drives.

Product Selection

LCX9000 Liquid Cooled Drives

380–500 Vac Liquid Cooled Drives

Motor Output Current Thermal, I_{th} (A)	I_L (A)	I_H (A)	kW	Chassis	Catalog Number
16	15	11	7.5	CH3	**LCX016A0-4A3N2**
22	20	15	11	CH3	**LCX022A0-4A3N2**
31	28	21	15	CH3	**LCX031A0-4A3N2**
38	35	25	18.5	CH3	**LCX038A0-4A3N2**
45	41	30	22	CH3	**LCX045A0-4A3N2**
61	55	41	30	CH3	**LCX061A0-4A3N2**
72	65	48	37	CH4	**LCX072A0-4A3N2**
87	79	58	45	CH4	**LCX087A0-4A3N2**
105	95	70	55	CH4	**LCX105A0-4A3N2**
140	127	93	75	CH4	**LCX140A0-4A3N2**
168	153	112	90	CH5	**LCX168A0-4A3N2**
205	186	137	110	CH5	**LCX205A0-4A3N2**
261	237	174	132	CH5	**LCX261A0-4A3N2**
300	273	200	160	CH61	**LCX300A0-4A3N2**
385	350	257	200	CH61	**LCX385A0-4A3N2**
460	418	307	250	CH72	**LCX460A0-4A3N2**
520	473	347	250	CH72	**LCX520A0-4A3N2**
590	536	393	315	CH72	**LCX590A0-4A3N2**
650	591	433	355	CH72	**LCX650A0-4A3N2**
730	664	487	400	CH72	**LCX730A0-4A3N2**
820	745	547	450	CH63	**LCX820A0-4A3N2**
920	836	613	500	CH63	**LCX920A0-4A3N2**
1030	936	687	560	CH63	**LCXH10A0-4A3N2**
1150	1045	766	600	CH63	**LCXH11A0-4A3N2**
1370	1245	913	700	CH74	**LCXH13A0-4A3N2**
1640	1491	1093	900	CH74	**LCXH16A0-4A3N2**
2060	1873	1373	1100	CH74	**LCXH20A0-4A3N2**
2300	2091	1533	1200	CH74	**LCXH23A0-4A3N2**

LCX9000 Liquid Cooled Drives

525–690 Vac Liquid Cooled Drives

Motor Output Current Thermal, I_{th} (A)	I_L (A)	I_H (A)	kW	Chassis	Catalog Number
170	155	113	110	CH61	**LCX170A0-5A3N2**
208	189	139	132	CH61	**LCX208A0-5A3N2**
261	237	174	160	CH72	**LCX261A0-5A3N2**
325	295	217	200	CH72	**LCX325A0-5A3N2**
385	350	257	250	CH72	**LCX385A0-5A3N2**
416	378	277	250	CH72	**LCX416A0-5A3N2**
460	418	307	300	CH72	**LCX460A0-5A3N2**
502	456	335	355	CH72	**LCX502A0-5A3N2**
590	536	393	400	CH63	**LCX590A0-5A3N2**
650	591	433	450	CH63	**LCX650A0-5A3N2**
750	682	500	500	CH63	**LCX750A0-5A3N2**
820	745	547	560	CH74	**LCX820A0-5A3N2**
920	836	613	650	CH74	**LCX920A0-5A3N2**
1030	936	687	700	CH74	**LCXH10A0-5A3N2**
1180	1073	787	800	CH74	**LCXH11A0-5A3N2**
1300	1182	867	900	CH74	**LCXH13A0-5A3N2**
1500	1364	1000	1000	CH74	**LCXH15A0-5A3N2**

540–675 Vdc Liquid Cooled Inverter Units

Drive Output Current Thermal I_{th} (A)	Rated Cont. I_L (A)	Rated Cont. I_H (A)	Motor Output Power Optimum Motor at I_{th} 400V (kW)	Optimum Motor at I_{th} 500V (kW)	Power Loss c/a/T (kW)	Chassis	Catalog Number
16	15	11	7.5	11	0.4/0.2/**0.6**	CH3	**LCX016A0-4A7B2**
22	20	15	11	15	0.5/0.2/**0.7**	CH3	**LCX022A0-4A7B2**
31	28	21	15	18.5	0.7/0.2/**0.9**	CH3	**LCX031A0-4A7B2**
38	35	25	18.5	22	0.8/0.2/**1.0**	CH3	**LCX038A0-4A7B2**
45	41	30	22	30	1.0/0.3/**1.3**	CH3	**LCX045A0-4A7B2**
61	55	41	30	37	1.3/0.3/**1.5**	CH3	**LCX061A0-4A7B2**
72	65	48	37	45	1.2/0.3/**1.5**	CH4	**LCX072A0-4A7N2**
87	79	58	45	55	1.5/0.3/**1.8**	CH4	**LCX087A0-4A7N2**
105	95	70	55	75	1.8/0.3/**2.1**	CH4	**LCX105A0-4A7N2**
140	127	93	75	90	2.3/0.3/**2.6**	CH4	**LCX140A0-4A7N2**
168	153	112	90	110	2.5/0.3/**2.8**	CH5	**LCX168A0-4A7N2**
205	186	137	110	132	3.0/0.4/**3.4**	CH5	**LCX205A0-4A7N2**
261	237	174	132	160	4.0/0.4/**4.4**	CH5	**LCX261A0-4A7N2**
300	273	200	160	200	4.5/0.4/**4.9**	CH61	**LCX300A0-4A7N2**
385	350	257	200	250	5.5/0.5/**6.0**	CH61	**LCX385A0-4A7N2**
460	418	307	250	315	5.5/0.5/**6.0**	CH62	**LCX460A0-4A7N2**
520	473	347	250	355	6.5/0.5/**7.0**	CH62	**LCX520A0-4A7N2**
590	536	393	315	400	7.5/0.6/**8.1**	CH62	**LCX590A0-4A7N2**

LCX9000 Liquid Cooled Drives

540–675 Vdc Liquid Cooled Inverter Units, continued

Drive Output Current Thermal I_{th} (A)	Rated Cont. I_L (A)	Rated Cont. I_H (A)	Motor Output Power Optimum Motor at I_{th} 400V (kW)	Optimum Motor at I_{th} 500V (kW)	Power Loss c/a/T (kW)	Chassis	Catalog Number
650	591	433	355	450	8.5/0.6/**9.1**	CH62	**LCX650A0-4A7N2**
730	664	487	400	500	10.0/0.7/**10.7**	CH62	**LCX730A0-4A7N2**
820	745	547	450	560	12.5/0.8/**13.3**	CH63	**LCX820A0-4A7N2**
920	836	613	500	600	14.4/0.9/**15.3**	CH63	**LCX920A0-4A7N2**
1030	936	687	560	700	16.5/1.0/**17.5**	CH63	**LCXH10A0-4A7N2**
1150	1045	766	600	750	18.4/10.1/**19.5**	CH63	**LCXH11A0-4A7N2**
1370	1245	913	700	900	15.5/1.0/**16.5**	CH64	**LCXH13A0-4A7N2**
1640	1491	1093	900	1100	19.5/1.2/**20.7**	CH64	**LCXH16A0-4A7N2**
2060	1873	1373	1100	1400	26.5/1.5/**28.0**	CH64	**LCXH20A0-4A7N2**
2300	2091	1533	1250	1500	29.6/1.7/**31.3**	CH64	**LCXH23A0-4A7N2**
2470	2245	1647	1300	1600	36.0/2.0/**38.0**	2*CH64	**LCXH24A0-4A7N2**
2950	2681	1967	1550	1950	39.0/2.4/**41.4**	2*CH64	**LCXH29A0-4A7N2**
3710	3372	2473	1950	2450	48.0/2.7/**50.7**	2*CH64	**LCXH37A0-4A7N2**
4140	3763	2760	2150	2700	53.0/3.0/**66.0**	2*CH64	**LCXH41A0-4A7N2**

710–930 Vdc Liquid Cooled Inverter Unit

Drive Output Current Thermal I_{th} (A)	Rated Cont. I_L (A)	Rated Cont. I_H (A)	Motor Output Power Optimum Motor at I_{th} 400V (kW)	Optimum Motor at I_{th} 500V (kW)	Power Loss c/a/T (kW)	Chassis	Catalog Number
170	155	113	110	160	4.5/0.2/**4.7**	CH61	**LCX170A0-5A7N2**
208	189	139	132	200	5.5/0.3/**5.8**	CH61	**LCX208A0-5A7N2**
261	237	174	160	250	5.5/0.3/**5.8**	CH61	**LCX261A0-5A7N2**
325	295	217	200	300	6.5/0.3/**6.8**	CH62	**LCX325A0-5A7N2**
385	350	257	250	355	7.5/0.4/**7.9**	CH62	**LCX385A0-5A7N2**
416	378	277	250	355	8.0/0.4/**8.4**	CH62	**LCX416A0-5A7N2**
460	418	307	300	400	8.5/0.4/**8.9**	CH62	**LCX460A0-5A7N2**
502	456	335	355	450	10.0/0.5/**10.5**	CH62	**LCX502A0-5A7N2**
590	536	393	400	560	10.0/0.5/**10.5**	CH63	**LCX590A0-5A7N2**
650	591	433	450	600	13.5/0.7/**14.2**	CH63	**LCX650A0-5A7N2**
750	682	500	500	700	16.0/0.8/**16.8**	CH63	**LCX750A0-5A7N2**
820	745	547	560	800	16.0/0.8/**16.8**	CH64	**LCX820A0-5A7N2**
920	836	613	650	850	18.0/0.9/**18.9**	CH64	**LCX920A0-5A7N2**
1030	936	687	700	1000	19.0/1.0/**20.0**	CH64	**LCXH10A0-5A7N2**
1180	1073	787	800	1100	21.0/10.1/**20.1**	CH64	**LCXH11A0-5A7N2**
1300	1182	867	900	1200	27.0/1.4/**28.4**	CH64	**LCXH13A0-5A7N2**
1500	1364	1000	1050	1400	32.0/1.6/**33.6**	CH64	**LCXH15A0-5A7N2**
1700	1545	1133	1150	1550	N/A	CH64	**LCXH17A0-5A7N2**
1850	1682	1233	1250	1650	34.2/1.8/**36.0**	2*CH64	**LCXH18A0-5A7N2**
2120	1927	1413	1450	1900	37.8/2.0/**39.8**	2*CH64	**LCXH21A0-5A7N2**
2340	2127	1560	1600	2100	48.6/2.5/**51.1**	2*CH64	**LCXH23A0-5A7N2**
2700	2455	1800	1850	2450	57.6/3.0/**60.6**	2*CH64	**LCXH27A0-5A7N2**
3100	2818	2066	2150	2800	N/A	2*CH64	**LCXH31A0-5A7N2**

Options

9000X Series Option Board Kits

The 9000X Series drives can accommodate a wide selection of expander and adapter option boards to customize the drive for your application needs. The drive's control unit is designed to accept a total of five option boards.

The 9000X Series factory installed standard board configuration includes an A9 I/O board and an A2 relay output board, which are installed in slots A and B.

Option Boards

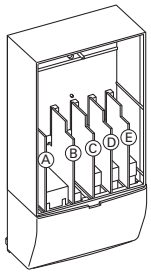

Option Board Kits

Option Kit Description ①	Allowed Slot Locations ②	Field Installed Catalog Number	Factory Installed Option Designator	SVX Ready Programs Basic	Local/ Remote	Standard	MSS	PID	Multi-P.	PFC
Standard I/O Cards										
2 RO (NC-NO)	B	**OPTA2**	—	■	■	■	■	■	■	■
6 DI, 1 DO, 2 AI, 1AO, 1 +10 Vdc ref, 2 ext +24 Vdc/EXT +24 Vdc	A	**OPTA9**	—	■	■	■	■	■	■	■
Extended I/O Cards										
2 RO, therm	B	**OPTA3**	**A3**	—	■	■	■	■	■	■
Encoder low Volt +5V/15V/24V	C	**OPTA4**	**A4**	—	■	■	■	■	■	■
Encoder high Volt +15V/24V	C	**OPTA5**	**A5**	—	■	■	■	■	■	■
Dual encoder +15V/24V	C	**OPTA7**	**A7**	—	■	■	■	■	■	■
6 DI, 1 DO, 2 AI, 1 AO	A	**OPTA8**	**A8**	—	■	■	■	■	■	■
3 DI (encoder 10–24V), out +15V/+24V, 2 DO (pulse+direction)—SPX only	C	**OPTAE**	**AE**	■	■	■	■	■	■	■
6 DI, 1 ext +24 Vdc/EXT +24 Vdc	B, C, **D**, E	**OPTB1**	**B1**	—	—	—	—	—	■	■
1 RO (NC-NO), 1 RO (NO), 1 therm	B, C, **D**, E	**OPTB2**	**B2**	—	—	—	—	—	■	■
1 AI (mA isolated), 2 AO (mA isolated), 1 ext +24 Vdc/EXT +24 Vdc	B, C, **D**, E	**OPTB4**	**B4**	—	■	■	■	■	■	■
3 RO (NO)	B, C, **D**, E	**OPTB5**	**B5**	—	—	—	—	—	■	■
1 ext +24 Vdc/EXT +24 Vdc, 3 Pt100	B, C, **D**, E	**OPTB8**	**B8**	—	—	—	—	—	—	—
1 RO (NO), 5 DI 42–240 Vac input	B, C, **D**, E	**OPTB9**	**B9**	—	—	—	—	—	■	■
SPI, absolute encoder	C	**OPTBB**	**BB**	—	—	—	—	—	—	—
Communication Cards ③										
Modbus	D, **E**	**OPTC2**	**C2**	■	■	■	■	■	■	■
Johnson Controls N2	D, **E**	**OPTC2**	**CA**	—	—	—	—	—	—	—
Profibus DP	D, **E**	**OPTC3**	**C3**	■	■	■	■	■	■	■
LonWorks	D, **E**	**OPTC4**	**C4**	■	■	■	■	■	■	■
Profibus DP (D9 connector)	D, **E**	**OPTC5**	**C5**	■	■	■	■	■	■	■
CanOpen (slave)	D, **E**	**OPTC6**	**C6**	■	■	■	■	■	■	■
DeviceNet	D, **E**	**OPTC7**	**C7**	■	■	■	■	■	■	■
Modbus (D9 Type connector)	D, **E**	**OPTC8**	**C8**	■	■	■	■	■	■	■
Modbus TCP	D, **E**	**OPTCI**	**CI**	■	■	■	■	■	■	■
Adapter—SPX only	D, **E**	**OPTD1**	**D1**	■	■	■	■	■	■	■
Adapter—SPX only	D, **E**	**OPTD2**	**D2**	■	■	■	■	■	■	■
RS-232 with D9 connection	D, **E**	**OPTD3**	**D3**	■	■	■	■	■	■	■
Keypad										
9000X Series standard keypad	—	**KEYPAD-STD**	**—**	—	—	—	—	—	—	■
9000X Series remote mount keypad unit (keypad not included, includes 10 ft cable, keypad holder, mounting hardware)	—	**OPTRMT-KIT-9000X**	**—**	—	—	—	—	—	—	—

Notes

① AI = Analog Input; AO = Analog Output, DI = Digital Input, DO = Digital Output, RO = Relay Output

② Option card must be installed in one of the slots listed for that card. Slot indicated in bold is the preferred location.

③ OPTC2 is a multi-protocol option card.

Line Reactors

The line reactor carries out several functions in the liquid cooled drive. Connection of the line reactor is necessary except if you have a component in your system that performs the same tasks (e.g. a transformer). The line reactor is needed as an essential component for motor control, to protect the input and DC-link components against abrupt changes of current and voltage as well as to function as a protection against harmonics. The line reactors are included in the standard delivery of liquid-cooled drives (not inverters). However, you can also order your drive without a line reactor.

Line Reactor Specifications

Drive Rating 480V	Drive Rating 690V	Thermal Current (A)	Nominal Inductance (µH) A/B ①	Calculated Loss (W)	Choke Catalog Number (690 Vac)
16 to 22A	12 to 23A	23	1900	145	**CHK0023N6A0**
31 to 38A	31 to 38A	38	1100	170	**CHK0038N6A0**
45 to 61A	46 to 62A	62	700	210	**CHK0062N6A0**
72 to 87A	72 to 87A	87	480	250	**CHK0087N6A0**
105 to 140A	105 to 140A	145	290	380	**CHK0145N6A0**
168 to 261A	170 to 261A	261	139/187	460	**CHK0261N6A0**
300 to 385A	325 to 385A 820 to 1180A ②	400	90/126	570	**CHK0400N6A0**
460 to 520A 1370A ②	416 to 502A 1300 to 1500A ②	520	65/95	610	**CHK0520N6A0**
590 to 650A 1640A ②	590 to 650A	650	51/71	840	**CHK0650N6A0**
730A 2060A ②	—	730	45/61	850	**CHK0730N6A0**
820A 2300A ②	750A	N/A	N/A	N/A	**CHK0820N6A0**
920 to 1030A	—	1000	30/41	950	**CHK1030N6A0**
1150A	—	1150	26/36	1000	**CHK1150N6A0**

Dimensions, see **Page V6-T2-232**.

Notes

① Inductances for different supply voltages: A = 400–480 Vac; B = 500–690 Vac.

② Drives require three chokes of the designated catalog number with six-pulse supply.

Technical Data and Specifications

LCX9000 Products

Description	Specification
General Specifications	
Line voltage	400 to 500 Vac; 525 to 690 Vac; (–10% to 10%) 465 to 800 Vdc; 640 to 1100 Vdc; (–0 to 0%)
Frequency	50/60 Hz
Line voltage variation	–10% to 10%
Input frequency variation	45–66 Hz
Continuous output current	Rated current at incoming cooling liquid temperature of 30°C
Output frequency	0–320 Hz
Drive efficiency	>95%
Power factor (displacement)	0.96
Liquid coolant pressure	87 psi (6 bar) maximum
Liquid coolant flow rate	1.3 to 7.9 gal./min. (5 to 30 liter/min.) minimum depending on drive size
Liquid coolant fittings	Standard quick connect, NPT
Operating ambient temperature	–10/50°C
Storage temperature	–40/70°C
Humidity	95% maximum (non-condensing)
Altitude	3300 ft (1000 m) maximum without derating
Enclosure	IP00
Warranty	Standard terms, 3 years with certified start-up
Mains Connection	
Input voltage (V_{in})	400–500 Vac; 525–690 Vac; (–10%–10%) 465–800 Vdc; 640–1100 Vdc; (–0–0%)
Input frequency (f_{in})	45–66Hz
Connection to mains	Once per minute or less (normal case)
Motor Connection	
Output voltage	0–V_{in}
Continuous output current	Rated current at nominal inflow cooling water temperature of 30°C; Overload 2 sec./20 sec.
Starting current	Rated current at 2 sec./20 sec. if output frequency <30 Hz and temperature of heatsink <149°F (65°C)
Output frequency	0–320 Hz (standard); 7200 Hz (special software)
Frequency resolution	Application dependent
Control Characteristics	
Control method	Frequency control (V/f) Open loop: Sensorless vector control Closed loop: Frequency control Closed loop: Vector control
Switching frequency 480V ①	Adjustable with parameter 2.6.9 Up to and including 61-Amp size: 1–16 kHz (factory default, 10 kHz) From 72-Amp size: 1–12 kHz (factory default, 3.6 kHz)
575V ①	1–6kHz (factory default, 1.5kHz)
Frequency reference	Analog input: resolution 0.1% (10 bits); accuracy ±1% Panel reference: resolution 0.01 Hz
Field weakening point	30–320 Hz
Acceleration time	0.1–3000 seconds
Deceleration time	0.1–3000 seconds
Braking torque	DC brake: 30% x T_n (without brake option)

Description	Specification
Ambient Conditions	
Ambient operating temperature	14°F (–10°C), no frost to 122°F (50°C) at I_{th} 122 to 158°F (50 to 70°C), derating required
Storage temperature	–40°F to 158°F (–40 to 70°C) No liquid in heatsink under 32°F (0°C)
Relative humidity	5–96% RH, noncondensing, no dripping water
Air quality	Chemical vapors: IEC 721-3-3, unit in operation, class 3C2 Mechanical particles: IEC 721-3-3, unit in operation, class 3S2 (no conductive dust allowed); No corrosive gases
Altitude	Up to 1,000m: 100% load capacity (no derating) Above 1,000m: Derating of 1% per each 100m required
Vibration	EN 50178, EN 60068-2-6; 5–150 Hz Displacement amplitude: 0.25 mm (peak) at 3–31 Hz Max. acceleration amplitude: 1G at 31–150 Hz
Shock	EN 50178, EN 60068-2-27, UPS drop test (for applicable UPS weights) Storage and shipping: Max. 15G, 11 ms (in package)
Enclosure class	IP00 open frame standard in entire kW/hp range
EMC	
Immunity	Fulfils all EMC immunity requirements
Emissions	EMC level N; EMC level T for IT networks
Safety	
Approvals	EN 50178, EN 60204-1, CE, UL, CUL, FI, GOST R, IEC 61800-5 (See unit nameplate for more detailed approvals.)
Control Connections	
Analog input voltage	0 to +10V, R_i = 200 kohm (–10V to +10V joystick control) Resolution 0.1%; accuracy ±1%
Analog input current	0(4)–20 mA, R_i = 250 ohm differential
Digital inputs	6 positive or negative logic; 18–24 Vdc
Auxiliary voltage	+24V, ±15%, max. 250 mA
Output reference voltage	+10V, +3%, max. load 10 mA
Analog output	0(4)–20 mA, R_L max. 500 ohm Resolution 10 bits; accuracy ±2%
Digital outputs	Open collector output, 50 mA/48V
Relay outputs	Two programmable change-over relay outputs Switching capacity: 24 Vdc/8A, 250 Vac/8A, 125 Vdc/0.4A Min. switching load: 5V/10 mA

Note

① Derating required if higher switching frequency than the default is used.

LCX9000 Products, continued

Description	Specification
Protections	
Overvoltage protection	
480V	911V
575V	1200V
Undervoltage protection	
480V	333V
575V	461V
Ground fault protection	In case of ground fault in motor or motor cable, only the drive is protected
Mains supervision	Trips if any of the input phases are missing (drives only)
Motor phase supervision	Trips if any of the output phases are missing
Unit overtemperature protection	
Alarm limit	149°F (65°C) for heatsink, 158°F (70°C) for circuit boards
Trip limit	158°F (70°C) for heatsink, 185°F (85°C) for circuit boards

Description	Specification
Protections, continued	
Overcurrent protection	Yes
Motor overload protection	Yes
Motor stall protection	Yes
Motor underload protection	Yes
Short-circuit protection	Yes (+24V and +10V reference voltages)
Liquid Cooling	
Allowed cooling agents	Drinking water Water-glycol mixture
Temperature of cooling agent	32 to 86°F (0 to 30°C) at I_{th} for input; 86 to 149°F (30 to 65°C) Max. temperature rise during circulation: 9°F (5°C), no condensation allowed
System max. working pressure	87 psi (6 bar)
System max. peak pressure	580 psi (40 bar)
Pressure loss (at nominal flow)	Varies according to size

Wiring Diagrams

Cooling System Diagrams

Example of a Typical Cooling System

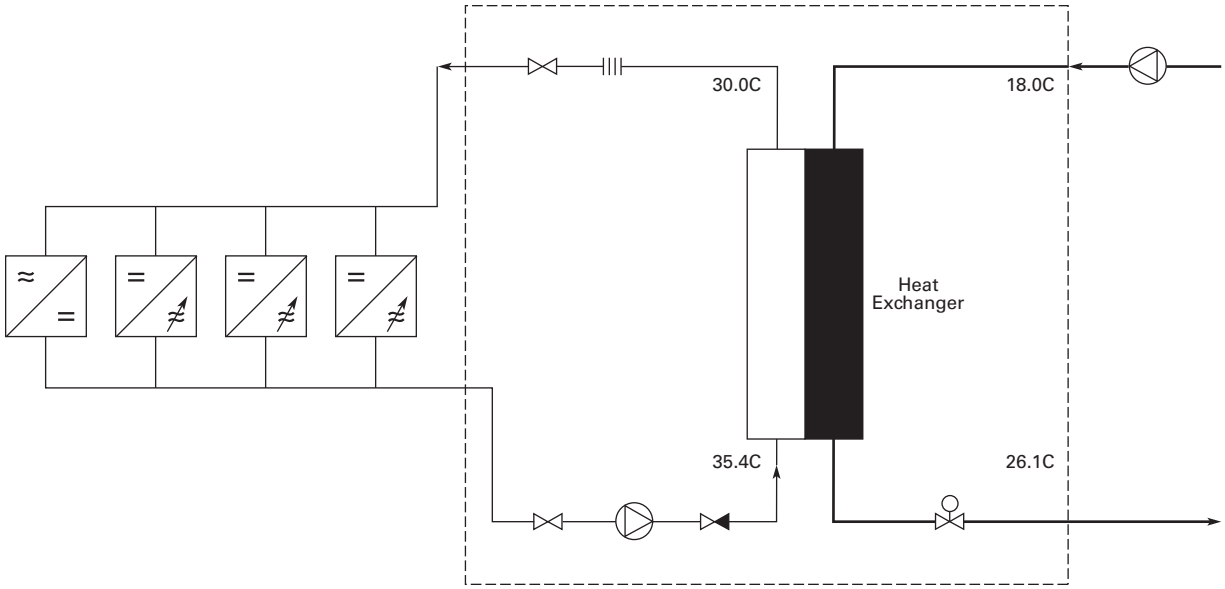

Example PI-Diagram of a Typical Cooling System and Connections

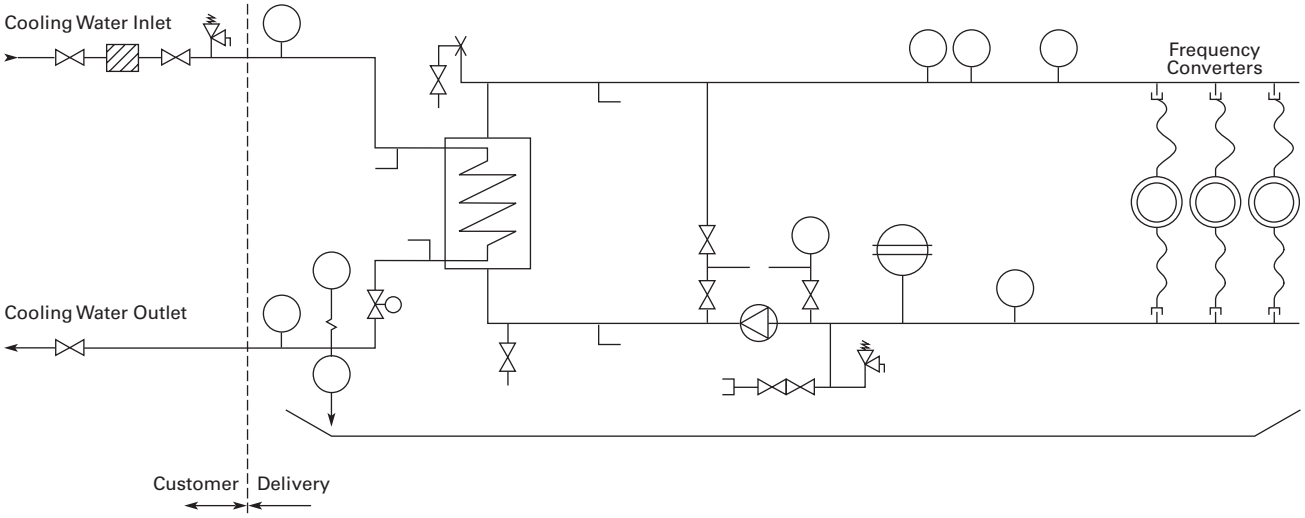

I/O Board Diagrams

A9 Option Board Control Wiring

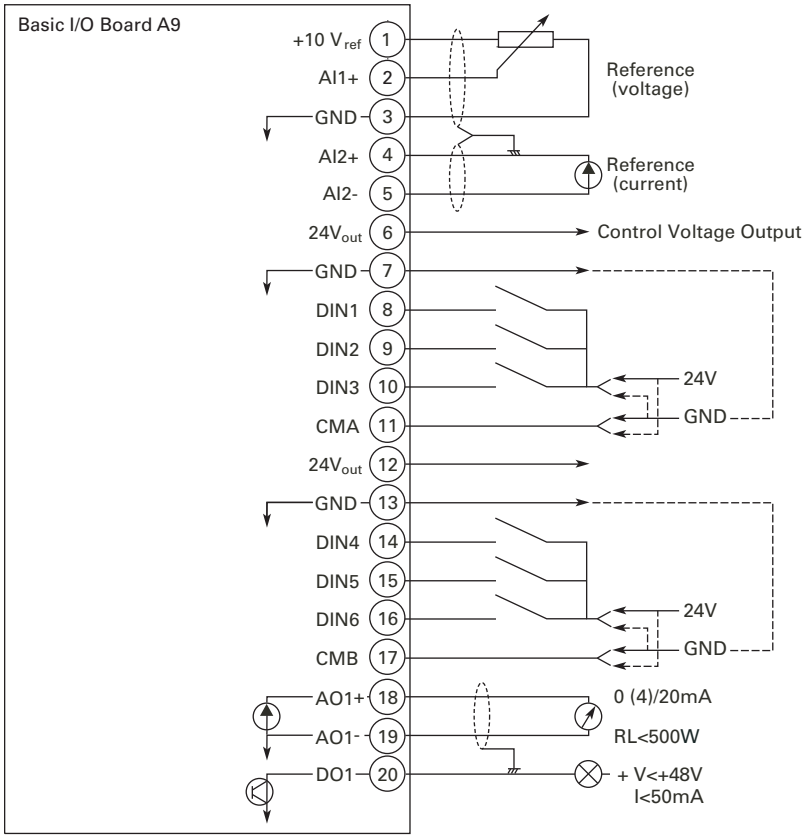

Dotted lines indicate the connections for inverted signals

A2 Option Board Wiring

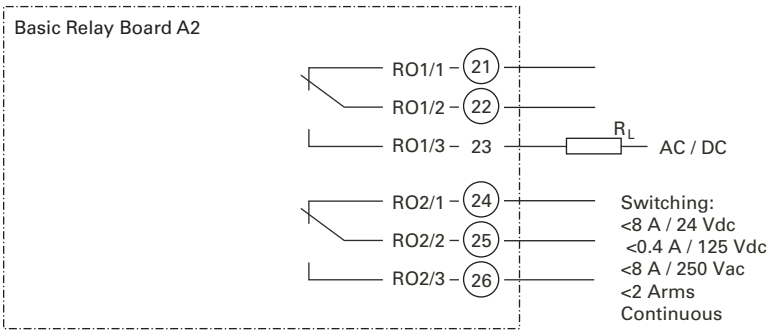

Dimensions

Approximate Dimensions in Inches (mm)

Line Reactors

Sizes Up To 61A

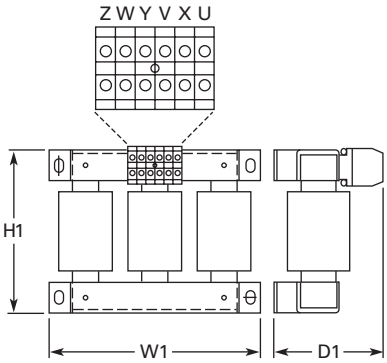

Sizes Larger Than 61A

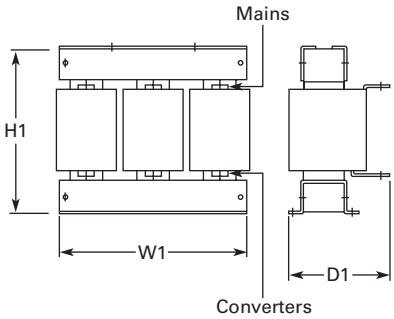

Catalog Number	H1	W1	D1	Weight Lbs (kg)
CHK0023N6A0	7.01 (178)	9.06 (230)	4.76 (121)	22 (10)
CHK0038N6A0	8.23 (209)	10.63 (270)	5.71 (145)	33 (15)
CHK0062N6A0	8.39 (213)	11.81 (300)	6.30 (160)	44 (20)
CHK0087N6A0	9.13 (232)	11.81 (300)	6.69 (170)	57 (26)
CHK0145N6A0	11.50 (292)	11.81 (300)	7.28 (185)	82 (37)
CHK0220N6A0	12.05 (306)	13.86 (352)	7.28 (185)	119 (54)
CHK0325N6A0	13.66 (347)	13.86 (352)	7.28 (185)	132 (60)
CHK0460N6A0	16.54 (423)	13.70 (348)	9.41 (239)	203 (92)
CHK0520N6A0	17.60 (447)	15.51 (394)	10.71 (272)	231 (105)
CHK0590N6A0	20.43 (519)	15.51 (394)	10.71 (272)	276 (125)
CHK0650N6A0	20.51 (521)	15.51 (394)	10.71 (272)	276 (125)
CHK0750N6A0	24.72 (628)	15.51 (394)	11.10 (282)	331 (150)
CHK0820N6A0	24.72 (628)	15.51 (394)	11.10 (282)	331 (150)
CHK1000N6A0	22.68 (576)	19.57 (497)	11.85 (301)	441 (200)
CHK1150N6A0	22.83 (580)	19.57 (497)	11.85 (301)	441 (200)

Approximate Dimensions in Inches (mm)

LCX9000 Drives

Chassis Size, CH3

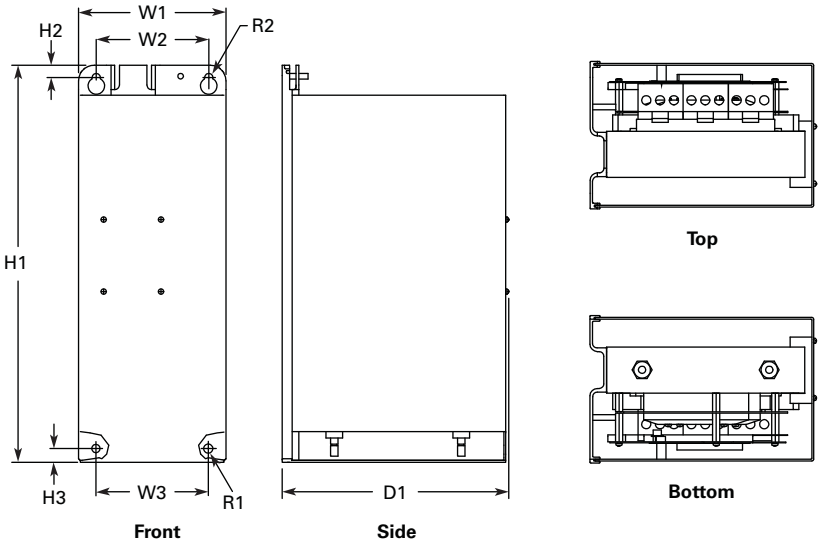

Voltage	Amps	H1	H2	H3	D1	W1	W2	W3	R1 Dia.	R2 Dia.	Weight Lbs (kg)
380–500 Vac	16–61	16.97 (431.0)	0.53 (13.5)	0.59 (15.0)	9.69 (246.0)	6.30 (160.0)	4.80 (122.0)	4.80 (122.0)	0.39 (10.0)	0.35 (9.0)	66 (30)

Chassis Size, CH4

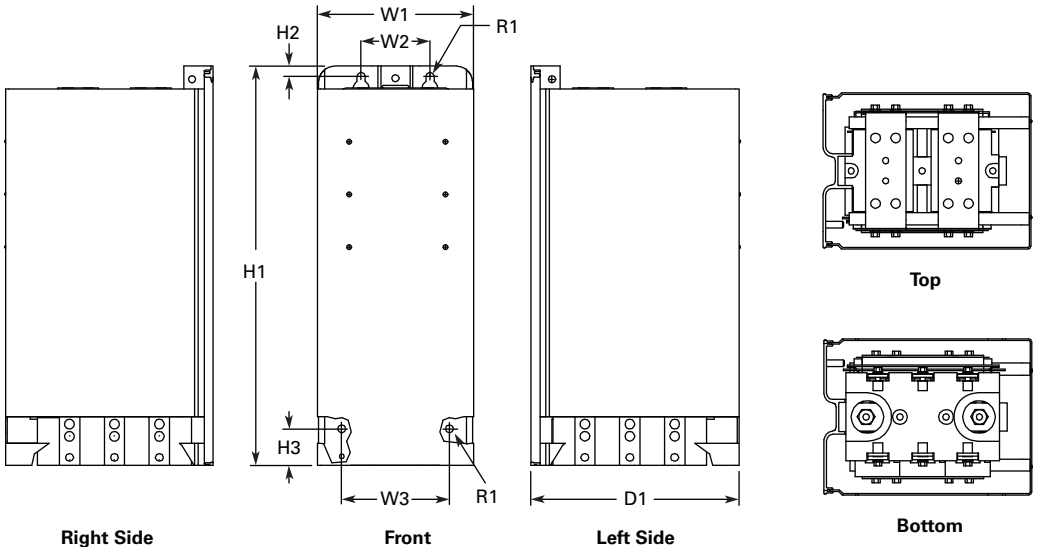

Voltage	Amps	H1	H2	H3	D1	W1	W2	W3	R1 Dia.	R2 Dia.	Weight Lbs (kg)
380–500 Vac	72–140	19.41 (493.0)	0.49 (12.5)	1.77 (45.0)	10.14 (257.5)	7.60 (193.0)	3.35 (85.0)	5.24 (133.0)	0.39 (10.0)	—	77 (35)

Approximate Dimensions in Inches (mm)

Chassis Size, CH5

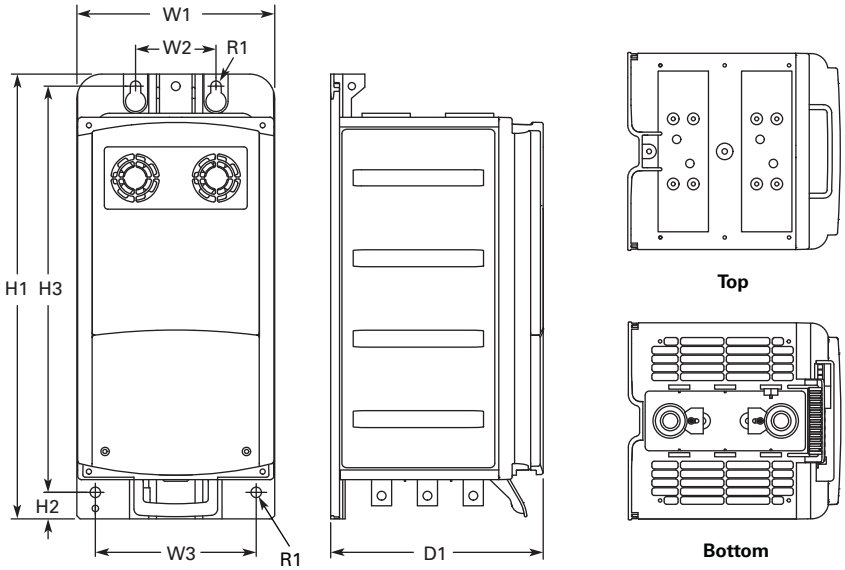

Voltage	Amps	H1	H2	H3	D1	W1	W2	W3	R1 Dia.	R2 Dia.	Weight Lbs (kg)
380–500 Vac	168–261	21.77 (553.0)	1.30 (33.0)	19.88 (505.0)	10.39 (264.0)	9.69 (246)	3.94 (100.0)	7.87 (200.0)	0.51 (13.0)	—	88 (40)

Chassis Size, CH61

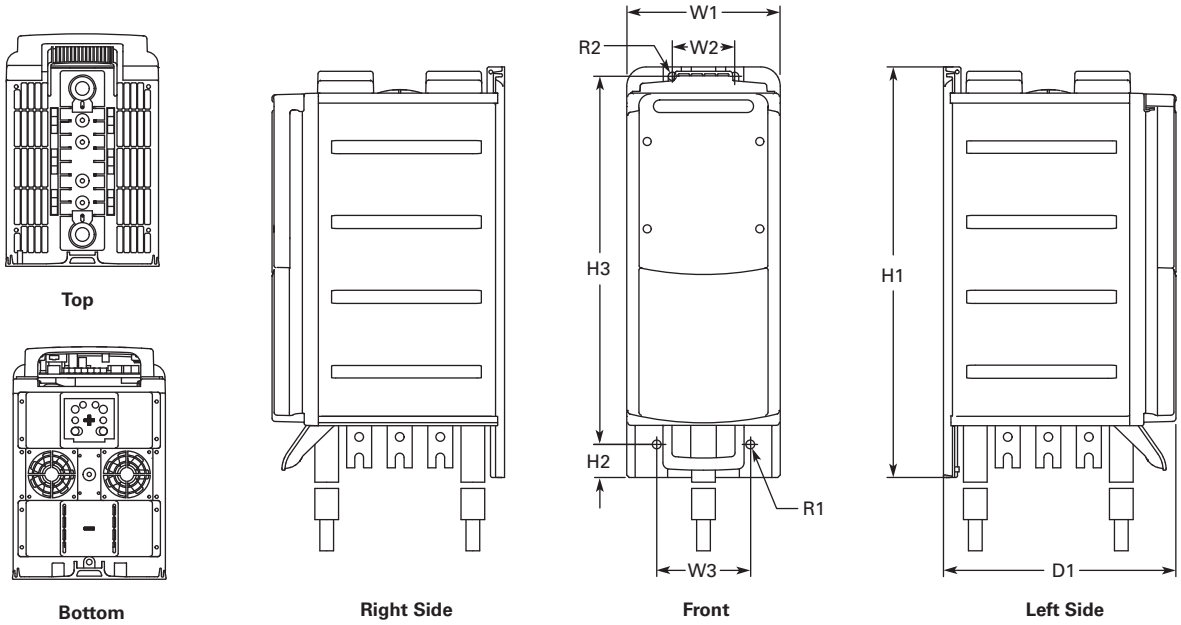

Voltage	Amps	H1	H2	H3	D1	W1	W2	W3	R1 Dia.	R2 Dia.	Weight Lbs (kg)
380–500 Vac	300–385	25.91 (658.0)	2.09 (53.0)	23.23 (590.0)	14.69 (373.0)	9.69 (246.0)	3.94 (100.0)	5.91 (150.0)	0.55 (14.0)	0.51 (13.0)	121 (55)
525–690 Vac	170–208										

Approximate Dimensions in Inches (mm)

Liquid-Cooled Inverter—Chassis Size, CH62

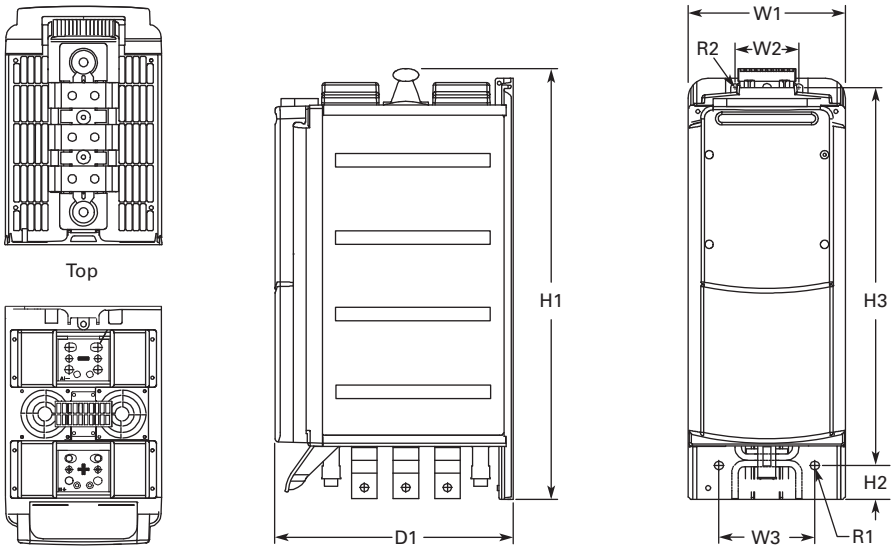

Voltage	Amps	H1	H2	H3	D1	W1	W2	W3	R1 Dia.	R2 Dia.
540–675 Vdc	460–730	26.50 (673)	2.0 (53)	23.23 (590)	14.69 (373)	9.69 (246)	3.94 (100)	5.91 (150)	0.55 (14)	0.51 (13)
710–930 Vdc	325–502									

Chassis Size, CH63

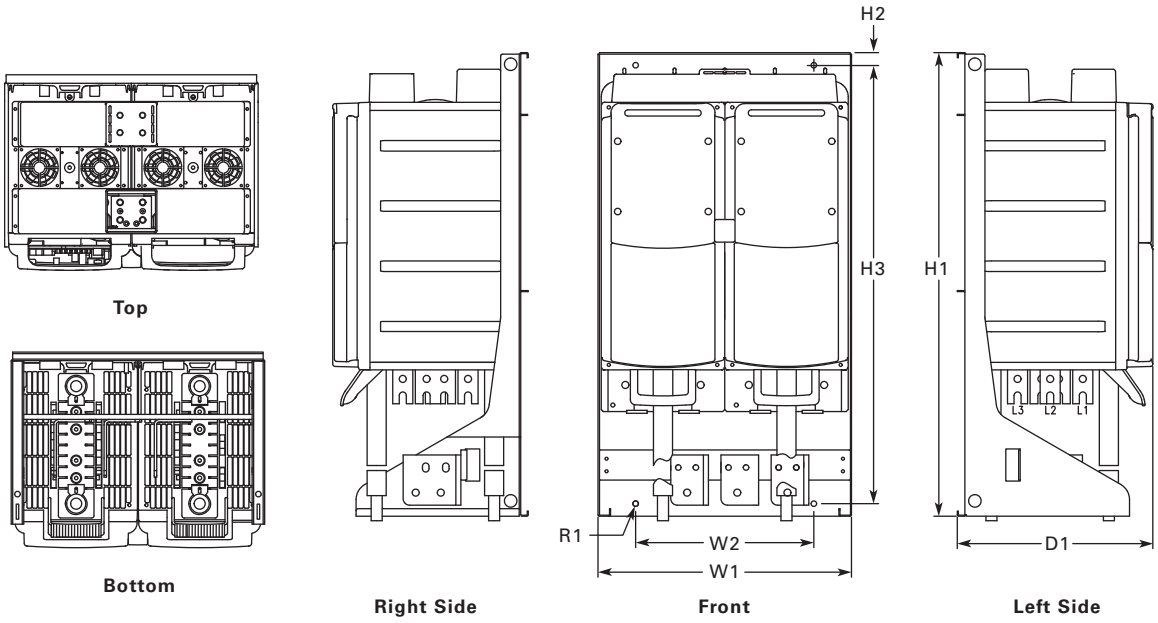

Voltage	Amps	H1	H2	H3	D1	W1	W2	R1 Dia.	Weight Lbs (kg)
380–500 Vac	820–1030	36.36 (923.5)	0.91 (23.0)	34.39 (873.5)	15.35 (390.0)	19.88 (505.0)	13.98 (355.0)	0.43 (11.0)	264 (120)
525–690 Vac	590–750								

Approximate Dimensions in Inches (mm)

Liquid-Cooled Inverter with Mounting Bracket, Chassis Size CH64, IP90

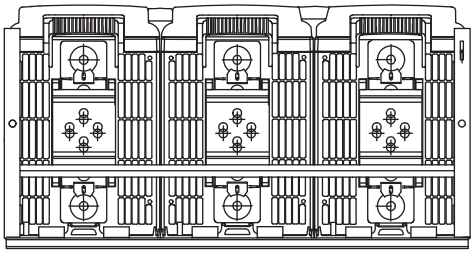

Bottom

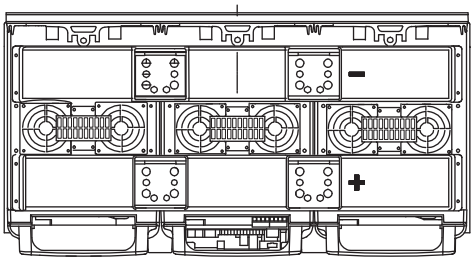

Top

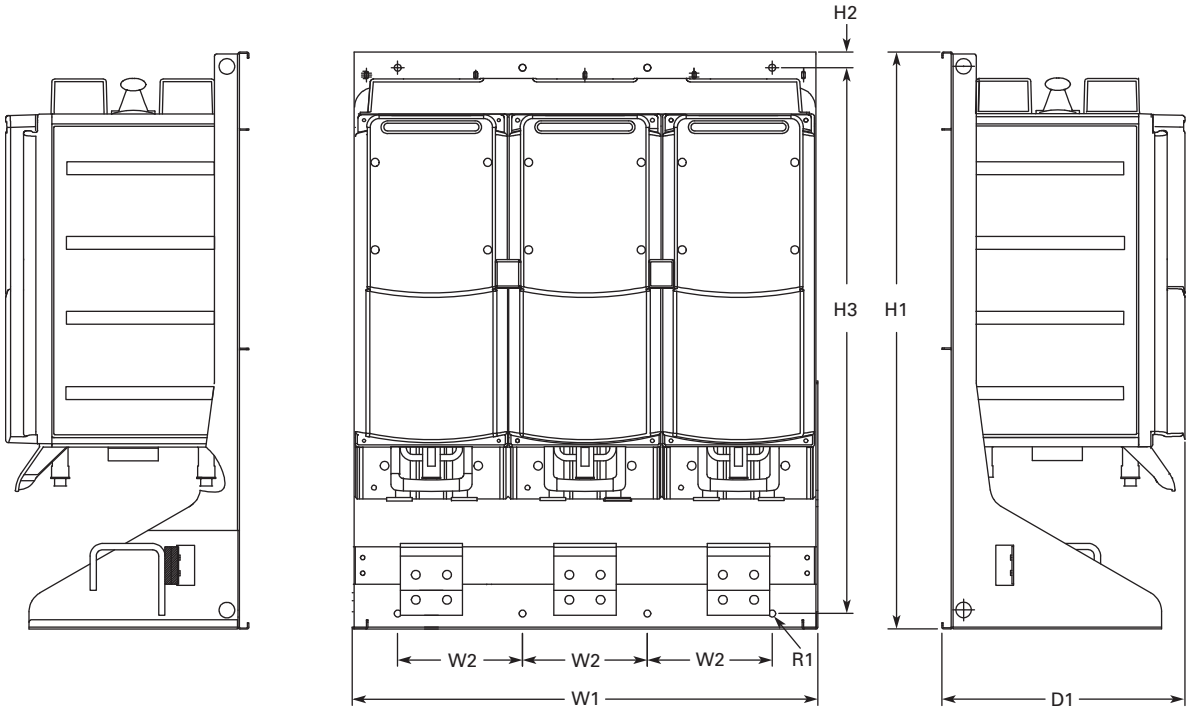

Right Side Front Left Side

Voltage	Amps	H1	H2	H3	D1	W1	W2	R1 Dia.
540–675 Vdc	1370–4140	36.38 (924)	1.03 (26)	34.37 (873)	15.35 (390)	29.37 (746)	7.87 (200)	0.43 (11)
710–930 Vdc	820–3100							

Approximate Dimensions in Inches (mm)

Chassis Size, CH72

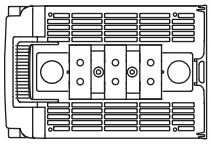

Top

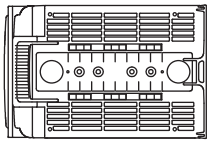

Bottom

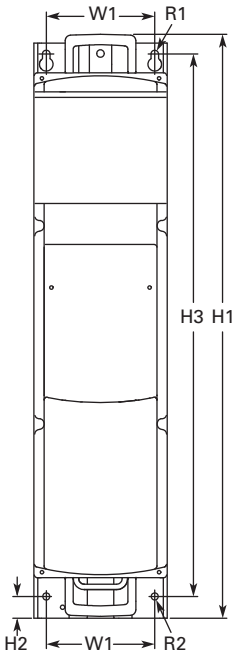

Front

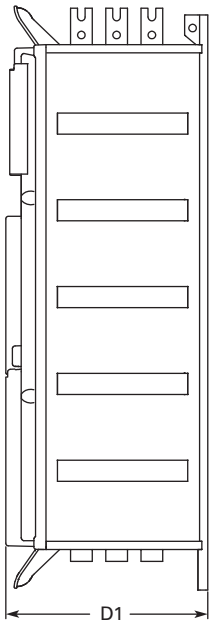

Side

Voltage	Amps	H1	H2	H3	D1	W1	R1 Dia.	R2 Dia.	Weight Lbs (kg)
380–500 Vac	460–730	42.38 (1076.5)	1.57 (40.0)	39.37 (1000.0)	14.65 (372.0)	7.87 (200.0)	0.55 (14.0)	0.51 (13.0)	198 (90)
525–690 Vac	261–502								

Approximate Dimensions in Inches (mm)

Chassis Size, CH74

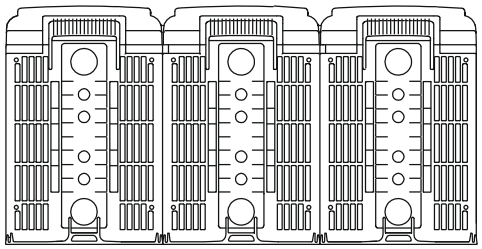

Top

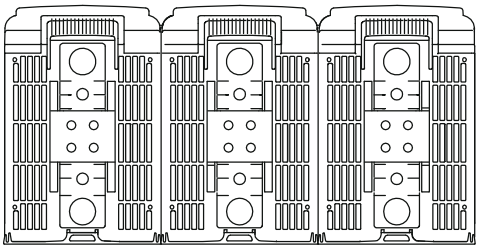

Bottom

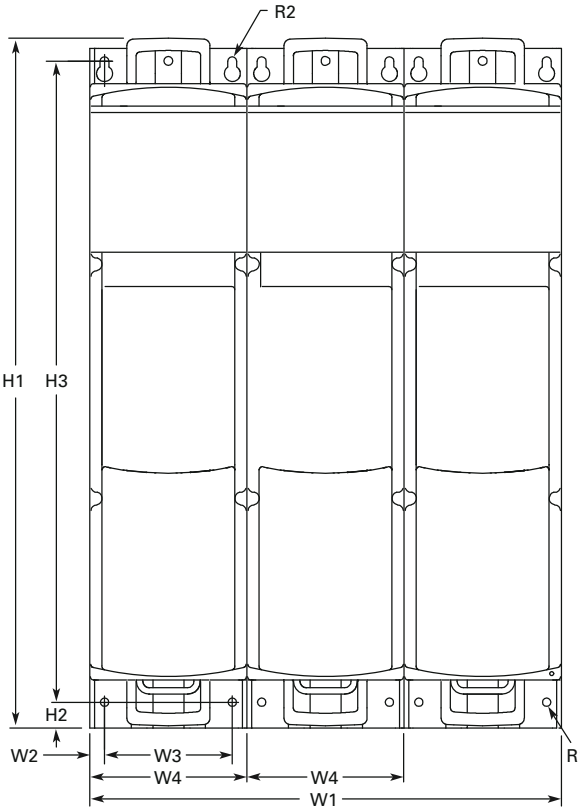

Front

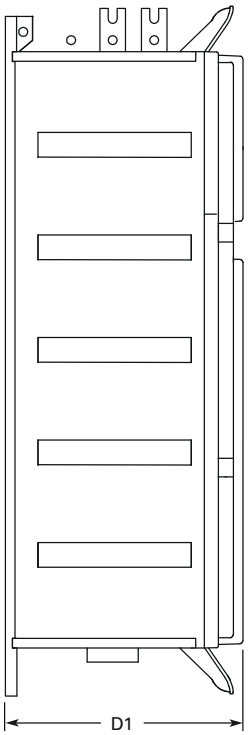

Side

Voltage	Amps	H1	H2	H3	D1	W1	W2	W3	W4	R1 Dia.	R2 Dia.	Weight Lbs (kg)
380–500 Vac	1370–2300	42.38 (1076.5)	1.57 (40.0)	39.37 (1000.0)	14.65 (372.0)	29.06 (738.0)	0.91 (23.0)	7.87 (200.0)	9.69 (246)	0.51 (13.0)	0.55 (14.0)	617 (280)
525–690 Vac	820–1500											

Control Unit

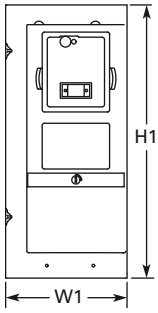

Front

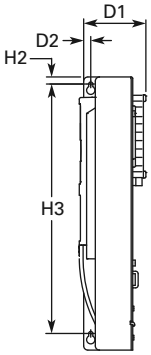

Side

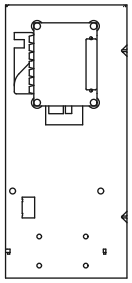

Back

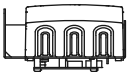

Bottom

H1	H2	H3	D1	D2	W1
12.93 (328.5)	0.33 (8.5)	11.81 (300.0)	2.95 (75.0)	0.33 (8.5)	5.75 (146.0)

SPA9000/SPN9000/SPI9000 Common DC Bus Drive Products

Contents

Description	*Page*
SPA9000/SPN9000/SPI9000 Common DC Bus Drive Products	
Application Description	**V6-T2-240**
Product Comparison	**V6-T2-240**
Features	**V6-T2-241**
Standards and Certifications	**V6-T2-241**
Catalog Number Selection	**V6-T2-241**
Product Selection	**V6-T2-243**
Options	**V6-T2-246**
Technical Data and Specifications	**V6-T2-247**
Wiring Diagrams	**V6-T2-249**
Dimensions	**V6-T2-250**

Product Description

Eaton offers a comprehensive range of common DC bus drive products. The product family covers a number of front-end units and inverter units in the entire power range from 1-1/2 to 2000 horsepower at 460V and 690V. The drive components are built on the SPX9000 technology.

Front-End Units

The front-end units convert a mains AC voltage and current into a DC voltage and current. The power is transferred from the mains to a common DC bus (and, in certain cases, vice versa).

The SPA (active front-end) unit is a bidirectional (regenerative) power converter for the front end of a common DC bus drive line up. An external LCL filter is used at the input. This unit is suitable in applications where low mains harmonics are required.

The SPN (non-regenerative front-end) unit is a uni-directional (motoring) power converter for the front-end of a common DC bus drive line-up. The device operates as a diode bridge using diode/thyristor components. A dedicated external choke is used at the input. The unit has the capacity to charge a common DC bus. This unit is suitable as a rectifying device when a "normal" level of harmonics is accepted and no regeneration to the mains is required.

Inverter Unit

The SPI9000 Inverter Unit is a bidirectional DC-fed power inverter for the supply and control of AC motors. The inverter is supplied from a common DC bus drive line-up. A charging circuit is needed in case a connection to a live DC bus is required. The DC side charging circuit is integrated up to 75 kW (FR4–FR8) and external for higher power ratings (FI9–FI14).

Application Description

The common DC bus product portfolio fulfills all solution demands with a flexible architecture.

Front end units are selected according to the level of harmonics and power requirements. Typical drive system configurations are illustrated the following figures.

SPA + Inverters

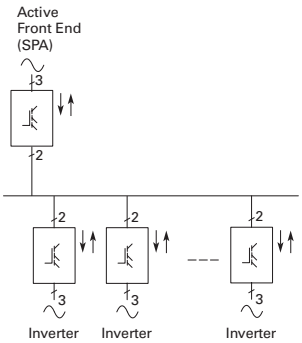

- Low harmonics, $-P_{mains} \approx +P_{mains}/P_{mains} \leq \Sigma P_{INU}$
- Suitable for almost every application

SPN + Inverters

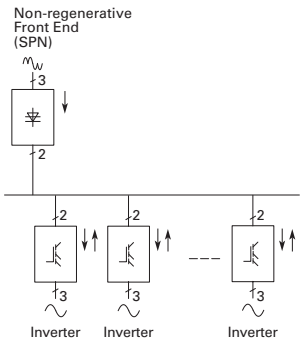

- Low total mains power, $P_{mains} \leq \Sigma P_{INU}$
- Suitable e.g. for small processing line with un- and recoiler, em-stop coasting

Combination Configuration

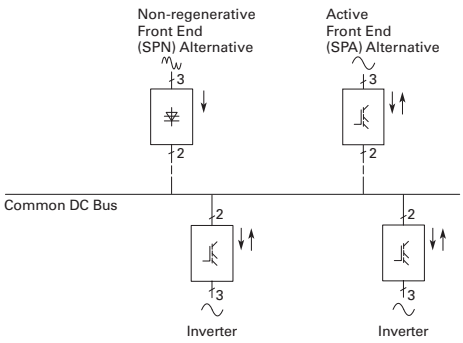

Common DC bus components are used in a multitude of combinations. Drives which are braking can transfer the energy directly to the drives in motoring mode.

Product Comparison

Advantages over Conventional Front Ends

Eaton Front Ends vs. Conventional

	Non-Regenerative Front End	Active Front End	Conventional Regenerative Front End ①
Input device	Choke (L)	Filter (LCL)	Choke or auto-transformer (L)
Bridge type	Diode/thyristor bridge	IGBT bridge, two-level type	Anti-parallel connected thyristor bridge
Type of operation	Controlled half-bridge	High frequency modulation (1.5 to 3.6 kHz)	Firing angle controlled
Direction of power	Motoring	Motoring and regenerating	Motoring and regenerating
Charging	Constant current	External required	Usually internal
DC voltage	Nominal (approx. 1.35 alternative U_N)	Stable at +10% of nominal (approx. 110% of 1.35 alternative U_N)	Lowered DC voltage for commutation margin (e.g. 17% fi approx. 83% of 1.35 alternative U_N) or autotransformer on regenerative bridge
THD	Similar to six-pulse bridge normal <40%	Very low	Similar to six-pulse bridge or worse

Note

① Conventional regenerative front end (a.k.a. “anti-parallel thyristor bridge”) is not available from Eaton.

Features

Standard Features

Feature	SPI9000 FR4, 6, 7	FR8	FI9–FI14	SPA FI9–FI14	SPN FI9
IP00	—	■	■	■	■
IP21	■	—	—	—	—
Air cooling	■	■	■	■	■
Standard board	■	■	■	■	
Varnished board	—	—	—	—	—
Alphanumeric keypad	■	■	■	■	—
EMC class T (EN 61800-3 for IT networks)	■	■	■	■	■
Safety CE/UL	■	■	■	■	■
Input choke	—	—	—	—	■
LCL filter	—	—	—	■	—
No integrated charging	—	—	■	■	—
Integrated charging (DC side)	■	■	—	—	■
Diode/thyristor rectifier	—	—	—	—	■
IGBT	■	■	■	■	—

Standards and Certifications

- CE
- UL
- cUL
- EN 61800-5-1 (2003)

Catalog Number Selection

Active Front End

SPA 205 A 0 – 4 A 3 N 1

Product Family
SPA = Active Front End

Current Rating

480V	575V
205 = 205A	**125** = 125A
385 = 385A	**325** = 325A
H10 = 1150A	**920** = 920A

Software Series
A = Standard

Enclosure Rating
0 = Chassis

Voltage Rating
4 = 480V
5 = 575V

Keypad
A = Alphanumeric

EMC Level
3 = ***IT*** network

Brake Chopper Options
N = No brake chopper circuit

Board Modifications
1 = Standard boards
2 = Varnished boards

Non-Regenerative Front End

SPN 510 A 0 – 4 A 3 N 1

Product Family
SPN = Non-regenerative front end

Current Rating
480V/575V
510 = 510A

Software Series
A = Standard

Enclosure Rating
0 = Chassis

Voltage Rating
4 = 480V
5 = 575V

Keypad
A = Alphanumeric

EMC Level
3 = ***IT*** network

Brake Chopper Options
N = No brake chopper circuit

Board Modifications
1 = Standard boards
2 = Varnished boards

SPI9000 Inverter Unit

SPI 016 A 1 – 4 A 3 N 1

Product Family
SPI = Inverter unit

Current Rating

480V (FR4–FR8)		575V (FR6–FR8)	
003 = 3.3A	**031** = 31A	**003** = 3.2A	**022** = 22A
007 = 7.6A	**038** = 38A	**004** = 4.5A	**027** = 27A
009 = 9A	**061** = 61A	**005** = 5.5A	**034** = 34A
012 = 12A	**071** = 72A	**007** = 7.5A	**041** = 41A
016 = 16A	**087** = 87A	**010** = 10A	**052** = 52A
023 = 23A	**105** = 105A	**013** = 13.5A	**062** = 62A
		018 = 18A	**080** = 80A
480V (FI9–FI13)		**575V (FI9–FI14)**	
140 = 140A	**730** = 730A	**100** = 100A	**502** = 502A
170 = 170A	**820** = 820A	**125** = 125A	**590** = 590A
205 = 205A	**920** = 920A	**144** = 144A	**650** = 650A
245 = 245A	**H10** = 1030A	**170** = 170A	**820** = 820A
300 = 300A	**H11** = 1150A	**208** = 207A	**920** = 920A
385 = 385A	**H13** = 1300A	**261** = 261A	**H10** = 1030A
460 = 460A	**H16** = 1600A	**325** = 325A	**H13** = 1300A
520 = 520A	**H19** = 1940A	**385** = 385A	**H15** = 1500A
590 = 590A	**H23** = 2300A	**460** = 460A	**H19** = 1900A
650 = 650A			

Software Series
A = Standard

Enclosure Rating
1 = NEMA Type 1/IP21
0 = Chassis

Voltage Rating
4 = 480V
5 = 575V

Keypad
A = Alphanumeric

EMC Level
3 = ***IT*** network

Brake Chopper Options
N = No brake chopper circuit

Board Modifications
1 = Standard boards
2 = Varnished boards

Product Selection

Common DC Bus Drive Products

SPA9000 Active Front End 480V

	Low Overload (AC Current)		High Overload (AC Current)		Imax	
Frame	**$I_{L\text{-}cont}$ (A)**	**I_{1min} (A)**	**$I_{H\text{-}cont}$ (A)**	**I_{1min} (A)**	**I_{2s} (A)**	**Catalog Number**
FI9	261	287	205	308	349	**SPA205A0-4A3N1**
FI10	460	506	385	578	693	**SPA385A0-4A3N1**
FI13	1300	1430	1150	1725	2070	**SPAH11A0-4A3N1**

SPN9000 Non-Regenerative Front End 480V

	Low Overload (AC Current)		High Overload (AC Current)		Imax	
Frame	**$I_{L\text{-}cont}$ (A)**	**I_{1min} (A)**	**$I_{H\text{-}cont}$ (A)**	**I_{1min} (A)**	**I_{2s} (A)**	**Catalog Number**
FI9	520	572	460	690	828	**SPN460A0-4A3N1**

SPI9000 Inverter Unit 480V

	Low Overload (AC Current)		High Overload (AC Current)		Imax	
Frame	**$I_{L\text{-}cont}$ (A)**	**I_{1min} (A)**	**$I_{H\text{-}cont}$ (A)**	**I_{1min} (A)**	**I_{2s} (A)**	**Catalog Number**
FR4	4.3	4.7	3.3	5	6.2	**SPI003A1-4A3N1**
	9	9.9	7.6	11.4	14	**SPI007A1-4A3N1**
	12	13.2	9	13.5	18	**SPI009A1-4A3N1**
FR6	16	17.6	12	18	24	**SPI012A1-4A3N1**
	23	25.3	16	24	32	**SPI016A1-4A3N1**
	31	34	23	35	46	**SPI023A1-4A3N1**
	38	42	31	47	62	**SPI031A1-4A3N1**
	46	51	38	57	76	**SPI038A1-4A3N1**
FR7	72	79	61	92	122	**SPI061A1-4A3N1**
	87	96	72	108	144	**SPI072A1-4A3N1**
	105	116	87	131	174	**SPI087A1-4A3N1**
FR8	140	154	105	158	210	**SPI105A0-4A3N1**
FI9	170	187	140	210	280	**SPI140A0-4A3N1**
	205	226	170	255	336	**SPI170A0-4A3N1**
	261	287	205	308	349	**SPI205A0-4A3N1**
	300	330	245	379	444	**SPI245A0-4A3N1**
FI10	385	424	300	450	540	**SPI300A0-4A3N1**
	460	506	385	578	693	**SPI385A0-4A3N1**
	520	572	460	690	828	**SPI460A0-4A3N1**
FI12	590	649	520	780	936	**SPI520A0-4A3N1**
	650	715	590	885	1062	**SPI590A0-4A3N1**
	730	803	650	975	1170	**SPI650A0-4A3N1**
	820	902	730	1095	1314	**SPI730A0-4A3N1**
	920	1012	820	1230	1476	**SPI820A0-4A3N1**
	1030	1133	920	1380	1656	**SPI920A0-4A3N1**
FI13	1150	1265	1030	1545	1854	**SPIH10A0-4A3N1**
	1300	1430	1150	1720	2070	**SPIH11A0-4A3N1**
	1450	1595	1300	1950	2340	**SPIH13A0-4A3N1**
FI14	1770	1947	1600	2400	2880	**SPIH16A0-4A3N1**
	2150	2365	1940	2910	3492	**SPIH19A0-4A3N1**

Note

For filter and line reactor information, see **Page V6-T2-245**.

SPA9000 Active Front End 575V

	Low Overload (AC Current)		High Overload (AC Current)		Imax	
Frame	**$I_{L\text{-}cont}$ (A)**	**I_{1min} (A)**	**$I_{H\text{-}cont}$ (A)**	**I_{1min} (A)**	**I_{2s} (A)**	**Catalog Number**
FI9	144	158	125	188	213	**SPA125A0-5A3N1**
FI10	385	424	325	488	585	**SPA325A0-5A3N1**
FI13	1030	1133	920	1380	1656	**SPA920A0-5A3N1**

SPN9000 Non-Regenerative Front End 575V

	Low Overload (AC Current)		High Overload (AC Current)		Imax	
Frame	**$I_{L\text{-}cont}$ (A)**	**I_{1min} (A)**	**$I_{H\text{-}cont}$ (A)**	**I_{1min} (A)**	**I_{2s} (A)**	**Catalog Number**
FI9	600	660	510	732	888	**SPN510A0-5A3N1**

SPI9000 Inverter Unit 575V

	Low Overload (AC Current)		High Overload (AC Current)		Imax	
Frame	**$I_{L\text{-}cont}$ (A)**	**I_{1min} (A)**	**$I_{H\text{-}cont}$ (A)**	**I_{1min} (A)**	**I_{2s} (A)**	**Catalog Number**
FR6	4.5	5	3.2	5	6.4	**SPI003A1-5A3N1**
	5.5	6	4.5	7	9	**SPI004A1-5A3N1**
	7.5	8	5.5	8	11	**SPI005A1-5A3N1**
	10	11	7.5	11	15	**SPI007A1-5A3N1**
	13.5	15	10	15	20	**SPI010A1-5A3N1**
	18	20	13.5	20	27	**SPI013A1-5A3N1**
	22	24	18	27	36	**SPI018A1-5A3N1**
	27	30	22	33	44	**SPI022A1-5A3N1**
	34	37	27	41	54	**SPI027A1-5A3N1**
FR7	41	45	34	51	68	**SPI034A1-5A3N1**
	52	57	41	62	82	**SPI041A1-5A3N1**
FR8	62	68	52	78	104	**SPI052A0-5A3N1**
	80	88	62	93	124	**SPI062A0-5A3N1**
	100	110	80	120	160	**SPI080A0-5A3N1**
FI9	125	138	100	150	200	**SPI100A0-5A3N1**
	144	158	125	188	213	**SPI125A0-5A3N1**
	170	187	144	216	245	**SPI144A0-5A3N1**
	208	229	170	255	289	**SPI170A0-5A3N1**
FI10	261	287	208	312	375	**SPI208A0-5A3N1**
	325	358	261	392	470	**SPI261A0-5A3N1**
	385	424	325	488	585	**SPI325A0-5A3N1**
FI12	460	506	385	578	693	**SPI385A0-5A3N1**
	502	552	460	690	828	**SPI460A0-5A3N1**
	590	649	502	753	904	**SPI502A0-5A3N1**
	650	715	590	885	1062	**SPI590A0-5A3N1**
	750	825	650	975	1170	**SPI650A0-5A3N1**
FI13	920	1012	820	1230	1476	**SPI820A0-5A3N1**
	1030	1133	920	1380	1656	**SPI920A0-5A3N1**
	1180	1298	1030	1464	1755	**SPIH10A0-5A3N1**
FI14	1500	1650	1300	1950	2340	**SPIH13A0-5A3N1**
	1900	2090	1500	2250	2700	**SPIH15A0-5A3N1**
	2250	2475	1900	2782	3335	**SPIH19A0-5A3N1**

Note

For filter and line reactor information, see **Page V6-T2-245**.

LCL Filters

LCL Filters for Active Front End (480V)

Amps	Catalog Number	Amps	Catalog Number
10	**REG 10 5 0**	270	**REG 270 5 0**
18	**REG 18 5 0**	410	**REG 410 5 0**
32	**REG 32 5 0**	580	**REG 580 5 0**
48	**REG 48 5 0**	840	**REG 840 5 0**
75	**REG 75 5 0**	1160	**REG 1160 5 0**
110	**REG 110 5 0**	1480	**REG 1480 5 0**
180	**REG 180 5 0**		

LCL Filters for Active Front End (690V)

Amps	Catalog Number	Amps	Catalog Number
14	**REG 14 6 0**	287	**REG 287 6 0**
23	**REG 23 6 0**	390	**REG 390 6 0**
35	**REG 35 6 0**	460	**REG 460 6 0**
52	**REG 52 6 0**	620	**REG 620 6 0**
85	**REG 85 6 0**	780	**REG 780 6 0**
122	**REG 122 6 0**	920	**REG 920 6 0**
185	**REG 185 6 0**	1180	**REG 1180 6 0**

Line Reactor

Line Reactor for Non-Regenerative Front End (480/575VV)

Amps	Watts Losses	Catalog Number
600	493	**CHK600**

Options

9000X Series Option Board Kits

The 9000X Series drives can accommodate a wide selection of expander and adapter option boards to customize the drive for your application needs. The drive's control unit is designed to accept a total of five option boards.

The 9000X Series factory installed standard board configuration includes an A9 I/O board and an A2 relay output board, which are installed in slots A and B.

Option Boards

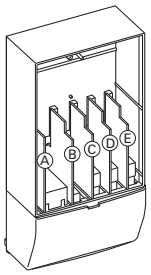

Option Board Kits

Option Kit Description ①	Allowed Slot Locations ②	Field Installed Catalog Number	Factory Installed Option Designator	SVX Ready Programs Basic	Local/ Remote	Standard	MSS	PID	Multi-P.	PFC
Standard I/O Cards										
2 RO (NC-NO)	B	**OPTA2**	—	■	■	■	■	■	■	■
6 DI, 1 DO, 2 AI, 1AO, 1 +10 Vdc ref, 2 ext +24 Vdc/EXT +24 Vdc	A	**OPTA9**	—	■	■	■	■	■	■	■
Extended I/O Cards										
2 RO, therm	B	**OPTA3**	**A3**	—	■	■	■	■	■	■
Encoder low volt +5V/15V24V	C	**OPTA4**	**A4**	—	■	■	■	■	■	■
Encoder high volt +15V/24V	C	**OPTA5**	**A5**	—	■	■	■	■	■	■
Double encoder	C	**OPTA7**	**A7**	■	■	■	■	■	■	■
6 DI, 1 DO, 2 AI, 1 AO	A	**OPTA8**	**A8**	—	■	■	■	■	■	■
3 DI (encoder 10–24V), out +15V/+24V, 2 DO (pulse+direction)	C	**OPTAE**	**AE**	■	■	■	■	■	■	■
6 DI, 1 ext +24 Vdc/EXT +24 Vdc	B, C, **D**, E	**OPTB1**	**B1**	—	—	—	—	—	■	■
1 RO (NC-NO), 1 RO (NO), 1 therm	B, C, **D**, E	**OPTB2**	**B2**	—	—	—	—	—	■	■
1 AI (mA isolated), 2 AO (mA isolated), 1 ext +24 Vdc/EXT +24 Vdc	B, C, **D**, E	**OPTB4**	**B4**	—	■	■	■	■	■	■
3 RO (NO)	B, C, **D**, E	**OPTB5**	**B5**	—	—	—	—	—	■	■
1 ext +24 Vdc/EXT +24 Vdc, 3 Pt100	B, C, **D**, E	**OPTB8**	**B8**	—	—	—	—	—	—	—
1 RO (NO), 5 DI 42–240 Vac input	B, C, **D**, E	**OPTB9**	**B9**	—	—	—	—	—	■	■
SPI, absolute encoder	C	**OPTBB**	**BB**	—	—	—	—	—	—	—
Communication Cards ③										
Modbus	D, **E**	**OPTC2**	**C2**	■	■	■	■	■	■	■
Johnson Controls N2	D, **E**	**OPTC2**	**CA**	—	—	—	—	—	—	—
Modbus TCP	D, **E**	**OPTCI**	**CI**	■	■	■	■	■	■	■
BACnet	D, **E**	**OPTCJ**	**CJ**	■	■	■	■	■	■	■
Ethernet IP	D, **E**	**OPTCK**	**CK**	■	■	■	■	■	■	■
Profibus DP	D, **E**	**OPTC3**	**C3**	■	■	■	■	■	■	■
LonWorks	D, **E**	**OPTC4**	**C4**	■	■	■	■	■	■	■
Profibus DP (D9 connector)	D, **E**	**OPTC5**	**C5**	■	■	■	■	■	■	■
CanOpen (slave)	D, **E**	**OPTC6**	**C6**	■	■	■	■	■	■	■
DeviceNet	D, **E**	**OPTC7**	**C7**	■	■	■	■	■	■	■
Modbus (D9 type connector)	D, **E**	**OPTC8**	**C8**	■	■	■	■	■	■	■
Adapter	D, **E**	**OPTD1**	**D1**	■	■	■	■	■	■	■
Adapter	D, **E**	**OPTD2**	**D2**	■	■	■	■	■	■	■
RS-232 with D9 connection	D, **E**	**OPTD3**	**D3**	■	■	■	■	■	■	■
Keypad										
9000X Series local/remote keypad (replacement keypad)	—	**KEYPAD-LOC/REM**	—	—	—	—	—	—	—	■
9000X Series remote mount keypad unit (keypad not included, includes 10 ft cable, keypad holder, mounting hardware)	—	**OPTRMT-KIT-9000X**	—	—	—	—	—	—	—	—
9000X Series RS-232 cable, 13 ft	—	**PP00104**	—	—	—	—	—	—	—	—

Notes

① AI = Analog Input; AO = Analog Output, DI = Digital Input, DO = Digital Output, RO = Relay Output

② Option card must be installed in one of the slots listed for that card. Slot indicated in bold is the preferred location.

③ OPTC2 is a multi-protocol option card.

Technical Data and Specifications

SPA9000/SPN9000/SPI9000

Description	Specification
Supply Connection	
Input voltage U_{in} (AC) front end modules	380–500 Vac/525–690 Vac –10% to 10%
Input voltage U_{in} (DC) inverter	465–800 Vdc/640–1100 Vdc –0% to 0%, the waviness of the inverter supply voltage, formed in rectification of the electric network's alternating voltage in basic frequency, must be less than 50V peak-to-peak
Output voltage U_{out} (AC) inverter	3 ~ 0–U_{in}/1.4
Output voltage U_{out} (DC) active front end module	10.10 x 1.35 x U_{in} (factory default)
Output voltage U_{out} (DC) non-regenerative front end module	1.35 x U_{in}
Ambient Conditions	
Ambient operating temperature	14 (no frost) to 122°F (–10 to 50°C): I_H 14 (no frost) to 104°F (–10 to 40°C): I_L
Storage temperature	–40 to 158°F (–40 to 70°C)
Relative humidity	0 to 95% RH, non-condensing, non-corrosive, no dripping water
Air quality	
Chemical vapors	IEC 721-3-3, unit in operation, class 3C2
Mechanical particles	IEC 721-3-3, unit in operation, class 3S2
Altitude	100% load capacity (no derating) up to 1000m 1% derating for each 100m above 1000m; max. 3000m
Vibration	5–150 Hz
EN50178/EN60068-2-6	Displacement amplitude 0.25 mm (peak) at 3–15.8 Hz Max acceleration amplitude 1G at 15.8–150 Hz
Shock EN50178, EN60068-2-27	UPS Drop Test (for applicable UPS weights) Storage and shipping: max 15G, 11 ms (in package)
Cooling capacity required	Approximately 2%
Cooling air required	FR4 41 cfm, FR6 250 cfm, FR7 250 cfm, FR8 383 cfm FI9 677 cfm, FI10 824 cfm, FI12 1648 cfm, FI13 2472 cfm
Unit enclosure class	FR4–FR7 NEMA Type 1/IP21; FR8, FI9–FI14 chassis (IP00)
EMC (at fault settings)	
Immunity	Fulfill all EMC immunity requirements
Safety	
Approvals	CE, UL, cUL, EN 61800-5-1 (2003), see unit nameplate for more detailed approvals
Control Connections	
Analog input voltage	0–10V, R_i = 200 kohms, (–10V to 10V joystick control) Resolution 0.1%, accuracy ±1%
Analog input current	0(4)–20 mA, R_i = 250 ohms differential
Digital inputs	6, positive or negative logic; 18–30 Vdc
Auxiliary voltage	+24V, ±15%, max. 250 mA
Output reference voltage	+10V, +3%, max. load 10 mA
Analog output	0(4)–20 mA; RL max. 500 ohms; resolution 10 bits Accuracy ±2%
Digital outputs	Open collector output, 50 mA/48V
Relay outputs	2 programmable change-over relay outputs Switching capacity: 24 Vdc/8A, 250 Vac/8A, 125 Vdc/0.4A Min. switching load: 5V/10 mA

SPA9000/SPN9000/SPI9000, continued

Description	Specification
Protections	
Overvoltage protection	480V/911 Vdc, 575V/1200 Vdc
Undervoltage protection	480V/333 Vdc, 575V/460 Vdc
Ground fault protection	In case of ground fault in motor or motor cable, only the inverter is protected
Motor phase supervision	Trips if any of the output phases is missing
Overcurrent protection	Yes
Unit overtemperature protection	Yes
Motor overload protection	Yes
Motor stall protection	Yes
Motor underload protection	Yes
Short circuit protection of 24V and 10V reference voltages	Yes

Input Fuses

SHT fuses can be assembled into same-size DIN fuse base.

SPA9000/SPN9000/SPI9000

Module Component	Frame	Bussman Fuse Type (aR)	Size	U_N (V)	I_N (A)	Qty.
Inverter Units						
SPI003A1-4	FR4	170M1560	0	690	20	2
SPI007A1-4	FR4	170M1562	0	690	63	2
SPI009A1-4	FR4	170M1562	0	690	63	2
SPI012A1-4	FR6	170M1565	0	690	63	2
SPI016A1-4	FR6	170M1565	0	690	63	2
SPI023A1-4	FR6	170M1565	0	690	63	2
SPI031A1-4	FR6	170M1567	0	690	100	2
SPI038A1-4	FR6	170M1567	0	690	100	2
SPI061A1-4	FR7	170M1570	0	690	200	2
SPI072A1-4	FR7	170M1570	0	690	200	2
SPI087A1-4	FR7	170M1571	0	690	250	2
SPI105A0-4	FR8	170M3819	DIN1	690	400	2
SPI140A0-4	FR8	170M3819	DIN1	690	400	2
SPI170A0-4	FR8	170M3819	DIN1	690	400	2
SPI205A0-4	FI9	170M6812	DIN3	690	800	2
SPI245A0-4	FI9	170M6812	DIN3	690	800	2
SPI300A0-4	FI10	170M8547	3SHT	690	1250	2
SPI385A0-4	FI10	170M8547	3SHT	690	1250	2
SPI460A0-4	FI10	170M8547	3SHT	690	1250	2
SPI520A0-4	FI12	170M8547	3SHT	690	1250	2 x 2
SPI590A0-4	FI12	170M8547	3SHT	690	1250	2 x 2
SPI650A0-4	FI12	170M8547	3SHT	690	1250	2 x 2
SPI730A0-4	FI12	170M8547	3SHT	690	1250	2 x 2
SPI820A0-4	FI12	170M8547	3SHT	690	1250	2 x 2
SPI920A0-4	FI12	170M8547	3SHT	690	1250	2 x 2
SPIH10A0-4	FI13	170M8547	3SHT	690	1250	6
SPIH11A0-4	FI13	170M8547	3SHT	690	1250	6
SPIH13A0-4	FI13	170M8547	3SHT	690	1250	6
SPIH16A0-4	FI14	170M8547	3SHT	690	1250	2 x 6
SPIH19A0-4	FI14	170M8547	3SHT	690	1250	2 x 6
SPIH23A0-4	FI14	170M8547	3SHT	690	1250	2 x 6

SHT fuses can be assembled into same-size DIN fuse base.

SPA9000/SPN9000/SPI9000, continued

Module Component	Frame	Bussman Fuse Type (aR)	Size	U_N (V)	I_N (A)	Qty.
Active Front Ends						
SPA205A0-4	FI9	170M6202	3SHT	1250	500	3
SPA385A0-4	FI10	170M6277	3SHT	1250	1000	3
SPAH10A0-4	FI13	170M6277	3SHT	1250	1000	3 x 3
Non-Regenerative Front Ends						
SPN468A0-4	FI9	170M8547	3SHT	690	1250	3

Wiring Diagrams

SPA9000—Active Front End

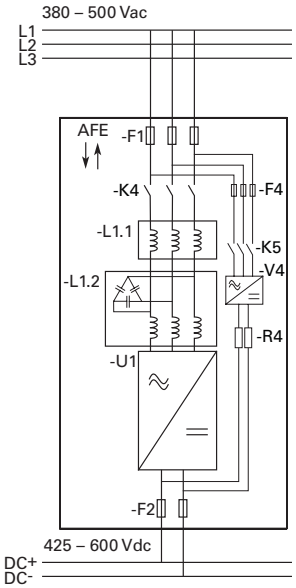

SPN9000—Non-Regenerative Front End

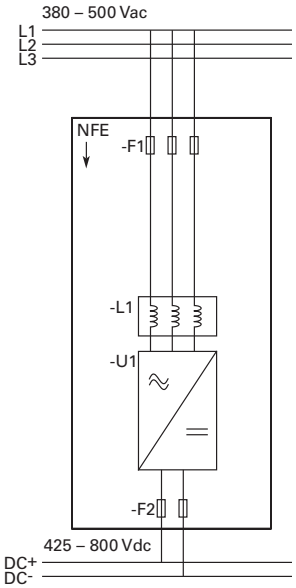

SPI9000—Inverter Unit (FR4–FR8)

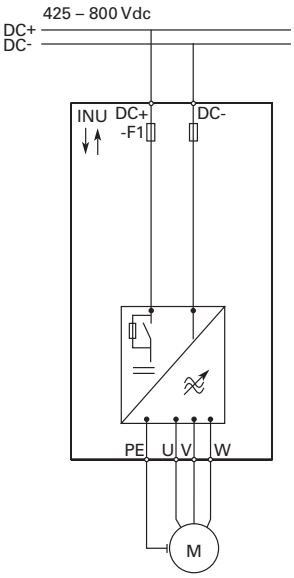

SPI9000—Inverter Unit (FI9–FI14)

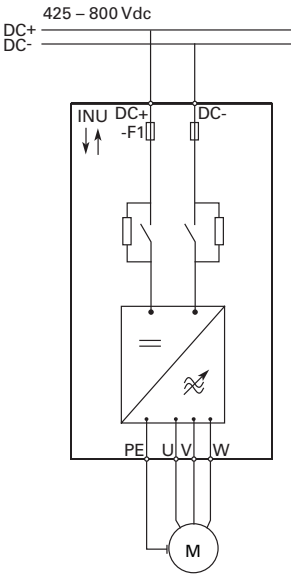

Dimensions

Approximate Dimensions in Inches (mm)

SPA9000/SPN9000/SPI9000

Frame	Height	Width	Depth	Weight Lbs (kg)
Active Front Ends				
FI9	40.6 (1030)	9.4 (239)	14.6 (372)	148 (67)
FI10	40.6 (1032)	9.4 (239)	21.7 (552)	220 (100)
FI12	40.6 (1032)	2 x 9.4 (2 x 239)	21.7 (552)	441 (200)
FI13	40.6 (1032)	27.9 (708)	21.8 (553)	674 (306)
FI14	40.6 (1032)	2 x 27.9 (2 x 708)	21.8 (553)	1348 (612)
Non-Regenerative Front Ends				
FI9	40.6 (1030)	9.4 (239)	14.6 (372)	148 (67)
Inverter Units				
FR4	11.5 (292)	5.0 (128)	7.5 (190)	11 (5)
FR6	20.4 (519)	7.7 (195)	9.3 (237)	35 (16)
FR7	23.3 (591)	9.3 (237)	10.1 (257)	64 (29)
FR8	29.8 (758)	11.4 (289)	13.5 (344)	106 (48)
FI9	40.6 (1030)	9.4 (239)	14.6 (372)	148 (67)
FI10	40.6 (1032)	9.4 (239)	21.7 (552)	220 (100)
FI12	40.6 (1032)	2 x 9.4 (2 x 239)	21.7 (552)	441 (200)
FI13	40.6 (1032)	27.9 (708)	21.8 (553)	674 (306)
FI14	40.6 (1032)	2 x 27.9 (2 x 708)	21.8 (553)	1348 (612)